Oct. 16, 1951 G. T. SUTCH 2,571,781

BAG SPLITTING AND DISPENSING DEVICE

Filed Dec. 20, 1949

Fig. 1

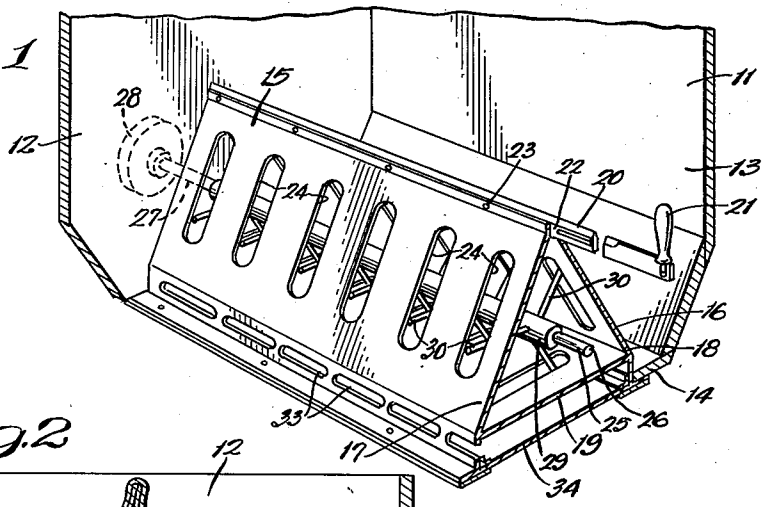

Fig. 2

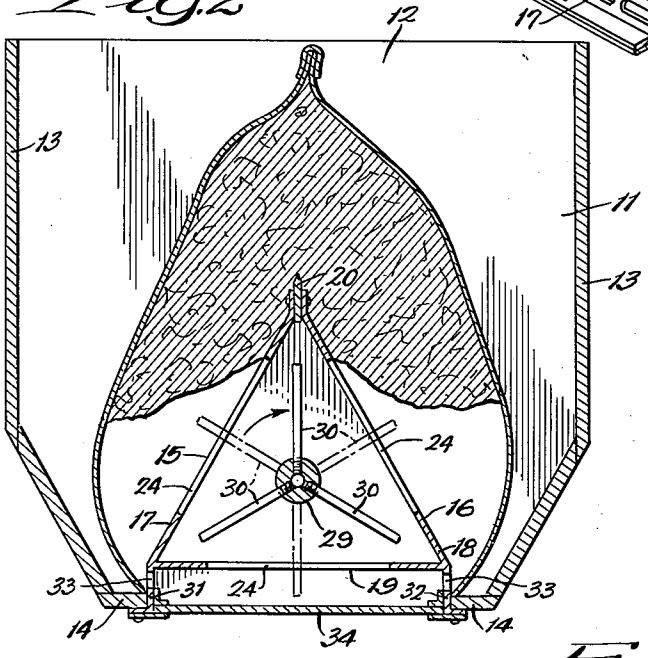

Fig. 3

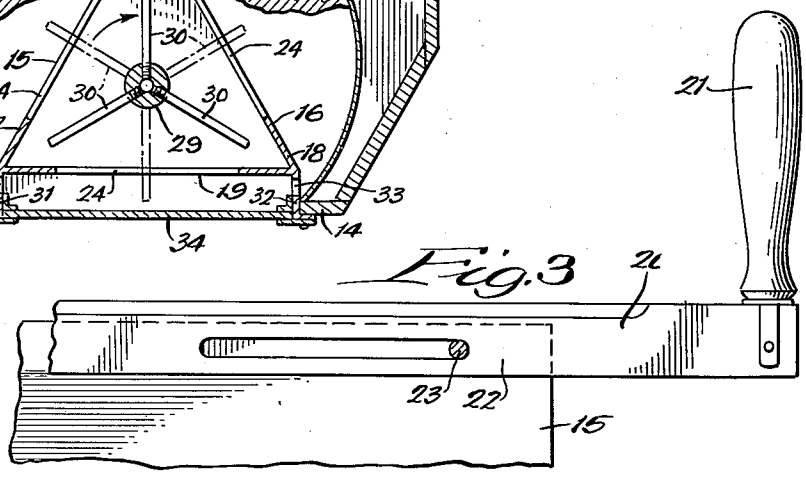

INVENTOR:
George T. Sutch,

BY Dawson, Orne, Britt and Spangenberg,
ATTORNEYS.

Patented Oct. 16, 1951

2,571,781

UNITED STATES PATENT OFFICE

2,571,781

BAG SPLITTING AND DISPENSING DEVICE

George T. Sutch, Lake Geneva, Wis.

Application December 20, 1949, Serial No. 133,973

5 Claims. (Cl. 214—1.1)

1

This invention relates to a device for splitting bags or sacks and means for removing the contents from the bags or sacks.

The object of this invention is to provide a bag splitting device which is simple in design and more efficient in operation.

Another object of this invention is to provide a bag splitting device capable of using the bags or sacks as a container until the contents thereof are extracted.

Another object of this invention is to provide an agitator within the bag splitting device capable of removing the contents of the bag or sack in a rapid and efficient manner.

A further object of this invention is to provide means for splitting bags or sacks when the bags or sacks initially fail to split.

The invention will best be understood from a consideration of the following detailed description, taken in connection with the accompanying drawings forming a part of this specification, with the understanding, however, that the invention is not to be confined to any strict conformity with the showing of the drawings, but may be changed or modified so long as such changes or modifications mark no material departure from the claimed features of the invention.

In the drawings:

Figure 1 shows a perspective view of the invention;

Fig. 2 shows an end elevation view of the invention;

Fig. 3 shows a side elevation view of the handle and cutting knife.

Referring now to the drawings in more detail and especially in Fig. 1, the numeral 11 indicates in general a receptacle or box having end walls 12 and side walls 13. The lower portions of the side walls 13 are slanted inwardly to the bottom 14 of the receptacle 11.

Mounted within the receptacle 11 is a device for splitting the bags and sacks, indicated generally by the numeral 15. The bag splitting device 15 consists of a 60° triangle or wedge 16 having sides 17 and 18, and a bottom 19. A cutting knife 20 is slidably mounted between the uppermost extension of the sides 17 and 18.

A handle 21 is secured to the knife 20 which extends through the end wall 12 of the receptacle 11. Portions of the shank 22 of the knife 20 are cut away so as to permit movement of the knife 20 upon bolts 23 or the like. Said bolts 23 also secure the knife 20 between the sides 17 and 18 of the wedge 16.

The sides 17 and 18, and the bottom 19 of the

2

wedge 16 have a series of apertures 24, as shown in Fig. 1. Housed within the wedge 16 is a shaft 25, one end 26 of which terminates in the end wall 12 of receptacle 11. The other end 27 protrudes through the end wall 12 and is keyed to a power source 28.

Keyed or press-fitted to the shaft 25 is an elongated sleeve 29. Integrally mounted to the sleeve 29 are a series of raking fingers 30 spaced 120° apart. The raking fingers 30 protrude through the apertures 24 of the wedge 16, as indicated generally in Figs. 1 and 2.

Extending down from the wedge 16 are supports 31 and 32, with cut-out portions 33, which are secured to the bottom 14 of the receptacle 11.

In operation the desired bag or sack is dropped within the receptacle 11 upon the wedge 16. The bag is split by the protruding cutting knife 20 allowing the sides of the split bag to drift downward around the wedge 16. The shaft 25 is then operated causing the raking fingers 30 to turn in a clockwise fashion, thereby extracting the contents of the bag or sack through the apertures 24 causing said contents to fall upon the feed gate 34 or the like.

The side walls 13 of the receptacle 11 are so constructed as to enable the split edges of the bag or sack to remain in a position close to the wedge 16, as shown in Fig. 2. Any material escaping from the bag or sack falls through the apertures 33 onto the feed gate 34.

In the event that a bag or sack is not split by the initial dropping thereof the cutting knife may be operated by grasping the handle 21 and working the cutting knife 20 back and forth.

I claim:

1. A bag splitting device comprising a substantially rectangular receptacle, a wedge member mounted within the receptacle, said wedge member having means for carrying an elongated knife member protruding from its apex for initially cutting the bag, said wedge member housing a rotatable shaft having a plurality of raking fingers so constructed and positioned as to protrude through a plurality of slots provided in the walls of said wedge to cooperate in removing the contents from the bag.

2. A bag splitting device comprising a substantially rectangular receptacle having the lower portion of its side walls slanting inwardly, a triangular wedge member mounted longitudinal to the side walls and within the receptacle, said wedge member having means for carrying an elongated knife member protruding from its

apex for initially cutting the bag and means for permitting lateral movement of the cutting knife in the apex of the wedge member, said wedge member housing a rotatable shaft having a plurality of raking fingers so constructed and positioned as to protrude through a plurality of slots provided in the walls of said wedge to cooperate in removing the contents from the bag.

3. A bag splitting device comprising a substantially rectangular receptacle, a triangular wedge member mounted longitudinal to the side walls and within the receptacle, an elongated knife member having spaced longitudinal slotted portions in operative engagement with stops in the apex of the wedge member for mounting of the knife and to permit lateral reciprocating movement of the cutting knife by means located outside the receptacle, said wedge member housing a rotatable shaft having a plurality of raking fingers so constructed and positioned as to protrude through a plurality of slots provided in the walls of said wedge to cooperate in removing the contents from the bag.

4. A bag splitting device comprising the combination of a substantially rectangular receptacle having the lower portion of its side walls slanting inwardly, a triangular wedge member mounted longitudinal to the side walls and within the receptacle, an elongated knife member, of greater length than said wedge member, having spaced longitudinal slotted portions in operative engagement with stops in the apex of the wedge member for mounting the knife and to permit lateral reciprocating movement of the cutting knife by means located outside the receptacle, said wedge member housing a rotatable shaft substantially the same length as said wedge member having a plurality of raking fingers so constructed and positioned as to protrude through a plurality of slots provided in the walls of said wedge to cooperate in removing the contents from the bag.

5. A bag splitting device comprising the combination of a substantially rectangular receptacle having the lower portion of its side walls slanting inwardly to keep the split ends of the bag in a closed position, a triangular wedge member mounted longitudinal to the side walls and within the receptacle, an elongated knife member, of greater length than said wedge member, having spaced longitudinal slotted portions in operative engagement with stops in the apex of the wedge member for mounting the knife and to permit lateral reciprocating movement of the cutting knife by means located outside the receptacle, said wedge member housing a rotatable shaft substantially the same length as said wedge member having a plurality of raking fingers so constructed and positioned as to protrude through a plurality of slots provided in the walls of said wedge to cooperate in removing the contents from the bag, and spaced openings provided in downward extensions from the base of the wedge member to permit easy removal of any contents from the bag which may fall to the bottom of said receptacle.

GEORGE T. SUTCH.

REFERENCES CITED

The following references are of record in the file of this patent:

UNITED STATES PATENTS

Number	Name	Date
1,885,978	Robrick	Nov. 1, 1932
2,078,599	McCauley	Apr. 27, 1937
2,200,757	Miller	May 14, 1940
2,306,426	Bundy	Dec. 29, 1942