2 Sheets—Sheet 1.

O. EDWARDS.

OIL AND GAS STOVES.

No. 193,937. Patented Aug. 7, 1877.

Fig. 1.

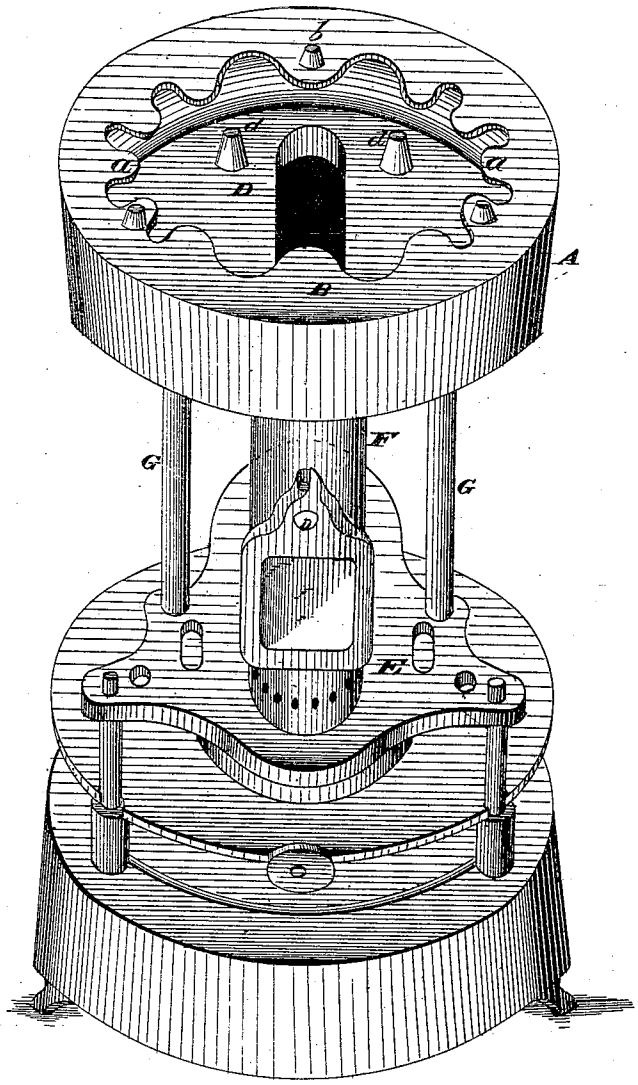

WITNESSES

Edw. J. Nottingham

A. W. Bright.

INVENTOR

Oliver Edwards,

By Leggett and Leggett,

ATTORNEYS

N. PETERS, PHOTO-LITHOGRAPHER, WASHINGTON, D. C.

2 Sheets—Sheet 2.

O. EDWARDS.

OIL AND GAS STOVES.

No. 193,937. Patented Aug. 7, 1877.

Fig. 2.

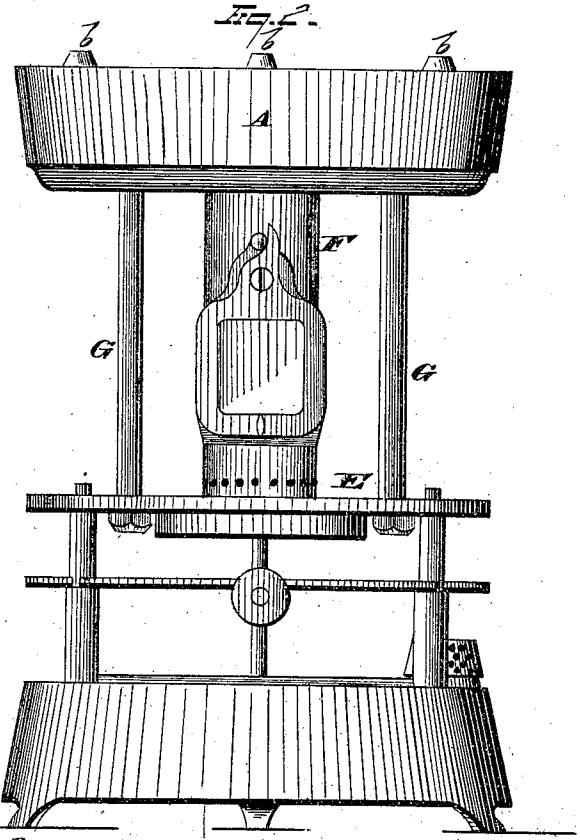

Fig. 3.

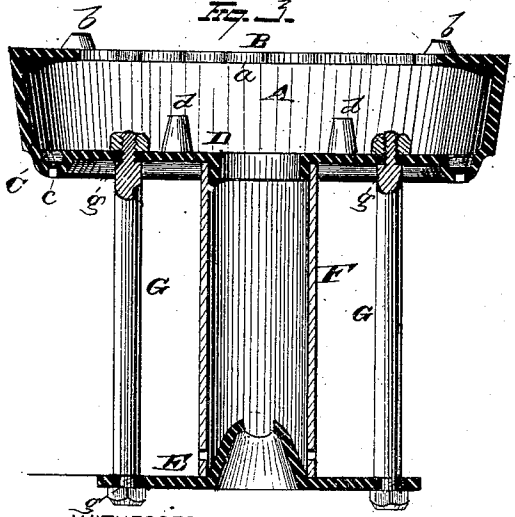

Fig. 4.

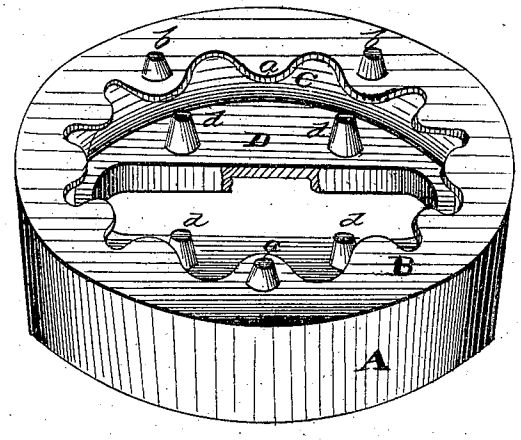

WITNESSES.

Ed. J. Nottingham

A. M. Bright.

INVENTOR

Oliver Edwards,

By Leggett & Leggett.

ATTORNEYS

N. PETERS, PHOTO-LITHOGRAPHER WASHINGTON, D. C.

UNITED STATES PATENT OFFICE.

OLIVER EDWARDS, OF FLORENCE, MASSACHUSETTS.

IMPROVEMENT IN OIL AND GAS STOVES.

Specification forming part of Letters Patent No. **193,937**, dated August 7, 1877; application filed June 20, 1877.

To all whom it may concern:

Be it known that I, OLIVER EDWARDS, of Florence, in the county of Hampshire and State of Massachusetts, have invented certain new and useful Improvements in Oil and Gas Stoves; and I do hereby declare the following to be a full, clear, and exact description of the invention, such as will enable others skilled in the art to which it pertains to make and use it, reference being had to the accompanying drawings, which form part of this specification.

My invention relates to improvements in oil or gas stoves.

It consists, first, of a hollow top to the chimney, made separate therefrom, and constituting a hot-air chamber or oven, the upper body of which is flat or horizontal, and is made with its inner edge scalloped, waved, or otherwise irregularly formed. A vessel seated in this irregular opening receives on its bottom the direct impact of the heat, while the formation of the horizontal upper edge plate allows the heat to surround the lower side portion of the vessel, and pass up through the spaces between the latter and its supporting top-opening.

The second feature consists in the studs upon the upper face of the horizontal edge plate, made irregular, as above described. They serve as supporting-standards for any vessel larger than the top-opening, and, at the same time with heating such a vessel, allow a full draft for the combustion below.

The third improvement is shown in the studs or posts formed on the base-plate of the top about the chimney-flue, for supporting vessels smaller than the top-opening made with irregular edge. The advantage in this construction lies in the horizontal inwardly-projecting upper plate of the top, which, by its peculiar construction, forms a hot-air chamber entirely surrounding the lower body of a vessel seated within it on these lower plate-studs. The products of combustion rising about the vessel are retained in large measure within this chamber by the overhanging horizontal upper plate, and thus subjected to a strong and constant degree of heat.

My fourth point of invention consists in constructing the base-plate of the top with a channel or open space about the chimney-flue, adapted to receive any waste contents or overflow of the vessels heated on the stove, and thus prevent them from entering the chimney, or in any way interfering with the action of the stove. This waste-chamber is provided with any suitable means for drawing off its contents, and for this purpose is made with one or more openings for such discharge.

To connect securely the top, chimney, and burner-plate or diaphragm together, tie-rods are used, which are made with shoulders or offsets at both extremities, fitting, respectively, against the upper face of the burner-plate, and the lower face of the base-plate of the hollow top. By this construction the top is supported on strong pillars based on the burner-plate, and hence all strain is borne by these pillar tie-rods, and the chimney relieved from any weight, and in this is the fifth part of my invention.

The burner-plate is made in a single piece as a supporting-diaphragm for the upper portion of the stove, with horizontal outwardly-projecting sides, fitting over suitable standards resting on the oil-reservoir. To these outer sides are secured the supporting tie-rods, extending vertically up to the hollow top.

The above constitutes the final main improvement made subject-matter herein, and by thus dispensing with a drum-body about the chimney, and using the supporting-rods, the stove is rendered light in weight, of less cost, and of greater simplicity of parts.

Referring to the drawings, Figure 1 is a view, in perspective, of a stove embodying my improvements. Fig. 2 is a side elevation of the same. Fig. 3 is a vertical cross-section of the chimney attachment, removed from the lower body of the stove. Fig. 4 is a view, in perspective, of the hollow top alone.

The chimney attachment, with its several parts, may be adapted for use in a gas instead of an oil stove; but my preferable use is in the latter instance, and hence I show the same as applied to an oil-stove. The lower portion of the oil-stove, however, may be changed completely, as my invention is intended to be used on any style of stove.

The hollow top A is made as a single cast-

ing, but can also be made otherwise—in two or more parts, or of other material than cast-iron. Its depth is sufficient to form a heating-chamber between its base-plate and its horizontal upper plate B. This latter, made to project inward a suitable distance, is formed with the irregular, scalloped, or waved edge *a*, while its upper face has the short studs or supporting-standards *b*. The lower or base plate is made with the channel or basin C, having one or more openings, *c*. The standards *d* on the central raised formation D, made by the depression of the outer bounding channel, are adapted to support small-bottomed vessels, while the larger-sized bottoms rest on the standards *b*, and those of intermediate size seat in the opening having the irregularly-formed edge *a*. An oven is thus made in the hollow top by the projecting plate B, extending horizontally inward on all sides. At the same time full draft is afforded for the combustion process, and also the upper sides of the heating-vessel receive the direct impact of the products of combustion, as the latter pass up about them through the spaces of the fluted edge.

The basin C is, preferably, made annular, to correspond with the formation of the entire top; but any change from such special form, either in the basin, top, or both, may be made by me, if desired. Should the contents of the vessel heating on the stove be spilled about or overflow, they will be caught by this channeled basin, and thus prevented from entering the chimney or otherwise interfering with the action of the stove. Instead of the openings in its bottom, shown, there might be a single outlet, discharging, under control, into a hand dish, so that, as necessary, the basin could be wasted or delivered of its charge without any of the latter dropping onto the outer face of the stove.

The burner-plate E is made extended out, so as to serve as a supporting-diaphragm for the chimney F and the hollow top A. Connection with the latter is maintained by the rods G, preferably two in number, though more may be used if wished. Both lower and upper extremities are provided with shoulders or offsets *g*, respectively abutting against the lower face of the hollow top and the upper face of the burner-plate. The ends are provided with suitable screw-nuts or other engaging mechanism, for tying the top and burner-plate together. Thus a joint tie-rod and supporting pillar or standard is made, all strain being taken from the chimney, and the top made to easily bear as heavy a burden as desired.

To use this part of my invention it is not necessary that the lower supporting-plate, to which the pillar tie-rod is secured, should be the burner-plate or connected therewith; neither is any special form of top supported thereby necessary, as the invention is independent of either these two elements in any special form of construction.

Having fully described my invention, what I claim as new, and desire to secure by Letters Patent, is—

1. An oil or gas stove top formed with a basin adapted to receive and discharge any overflow of vessels heated thereon, substantially as described.

2. In an oil or gas stove top, a bottom plate provided with a channel, substantially as described.

3. The channel formed in the lower plate of an oil or gas stove top about the chimney-flue, and provided with one or more waste-openings, substantially as described.

4. The top of an oil or gas stove whose upper horizontal body, either with or without short supporting-studs, has its opening edge irregularly formed, and whose lower horizontal body is provided with a waste-basin, substantially as described.

5. The top of an oil or gas stove made as a hollow casting, having a horizontal upper body, whose opening-edge is irregularly formed, and having its lower horizontal body provided with inner supporting-studs and a waste-basin, substantially as described.

6. In an oil or gas stove, a combined tie and pillar-rod formed with a supporting-shoulder, substantially as described.

7. In an oil or gas stove, the rods supporting the top, and made with shoulders or offsets at both extremities, substantially as described.

In testimony that I claim the foregoing I have hereunto set my hand this 18th day of June, 1877.

OLIVER EDWARDS.

Witnesses:

WM. H. CUMMINGS,

HORACE P. DIBBLE, Jr.