J. KRALUND.

CASTING MACHINE.

APPLICATION FILED MAR. 19, 1918.

1,266,825. Patented May 21, 1918.

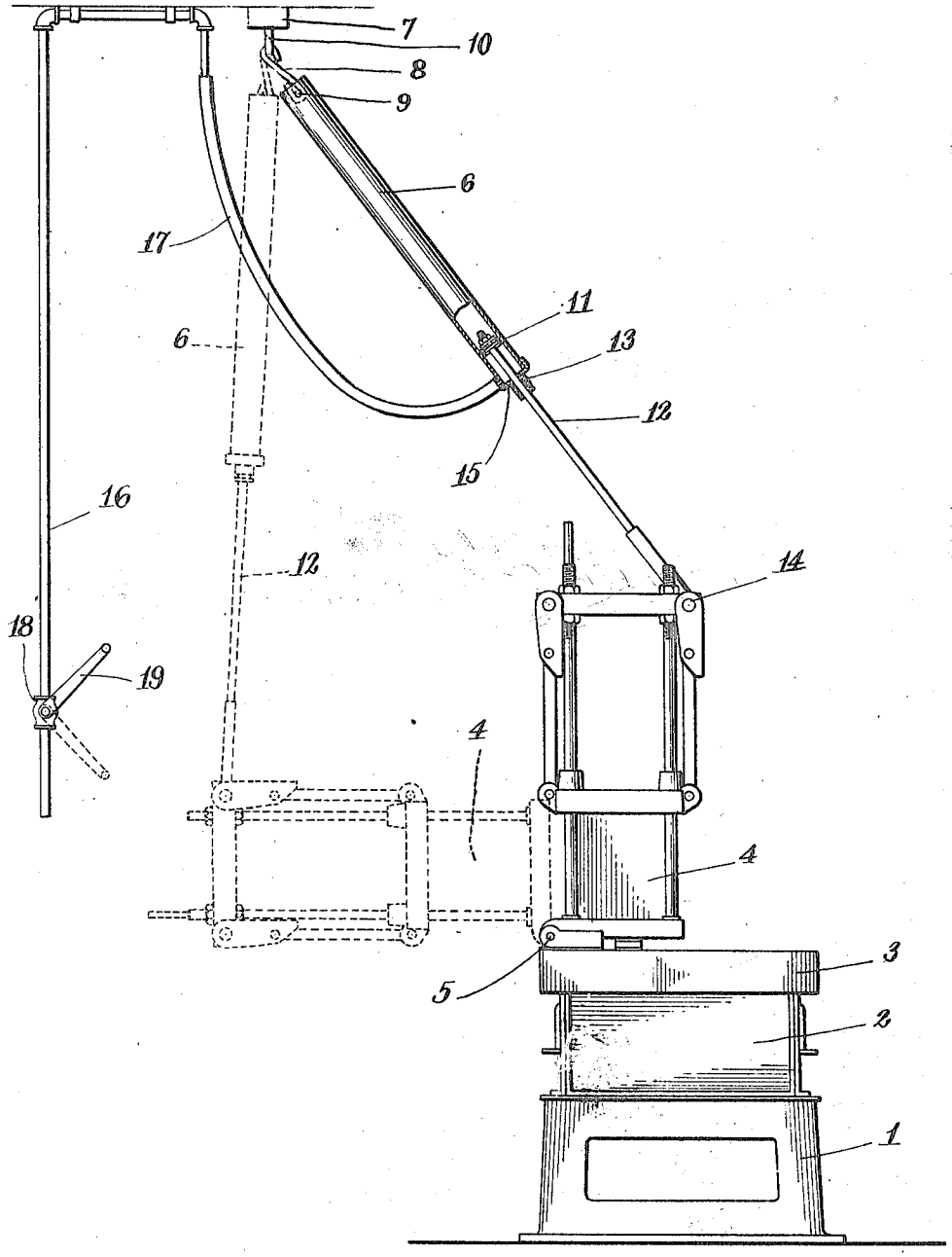

INVENTOR

John Kralund

BY

J. C. Edmunds

ATTORNEY

UNITED STATES PATENT OFFICE.

JOHN KRALUND, OF BROOKLYN, NEW YORK, ASSIGNOR TO DOEHLER DIE CASTING COMPANY, OF BROOKLYN, NEW YORK, A CORPORATION OF NEW YORK.

CASTING-MACHINE.

1,266,825. Specification of Letters Patent. Patented May 21, 1918.

Application filed March 18, 1918. Serial No. 223,365.

To all whom it may concern:

Be it known that I, JOHN KRALUND, a citizen of the United States, residing in the borough of Brooklyn, in the city of New York, county of Kings, and State of New York, have invented certain new and useful Improvements in Casting-Machines, of which the following is a specification.

My invention relates to an improved construction particularly applicable to die-casting machines, whereby a pivoted member may be quickly and easily swung, by manually controlled power means, from a vertical position to a horizontal position and vice-versa. My improvement is particularly designed for use in connection with a die-casting machine in which the die is mounted in a vertical position when the molten metal is forced therein and is then immediately swung into a horizontal position to facilitate the removal therefrom of the finished casting. Such a member has heretofore been swung from one position to the other by the workmen acting directly thereon and as the construction is rather heavy and the operation has to be repeated many times a day, the effect is wearing on the men and is not productive of the quickest results. In my improvement an air cylinder, or other fluid pressure cylinder, is so suspended or mounted and connected to the pivoted die, or member, that the latter may be swung from one position to the other by the simple manipulation of an air valve. An advantage of this construction is that a very simple form of single acting air cylinder may be used, the cylinder being so suspended or mounted that movement of the piston in the same direction serves to swing the pivoted die from either extreme position to a median position when the air or fluid pressure supply is shut off. The momentum of the parts will carry the pivoted member from its median position to either extreme position, the piston returning against an air cushion formed by the air remaining in the cylinder so that the pivoted die member being moved will be brought to rest in either of its extreme positions, easily and without jar.

In order that my invention may be more clearly understood, attention is hereby directed to the accompanying drawing forming part of this application and illustrating one embodiment of my invention. In the drawing the figure represents a side elevation of a casting machine to which my improvement is applied, the air cylinder being shown partly in section, and the moving parts being shown in dotted lines in a second position.

Referring to the drawing the casting machine referred to is illustrated merely in outline since my improvement may be applied to known forms of casting machines. The machine is shown as having a base portion 1, a portion 2, in which a melting pot is contained, and a stationary member 3 above the latter on which the die 4 is mounted by means of a pivotal connection illustrated at 5. When the die is in the vertical position, shown in full lines, the casting is made by forcing molten metal upwardly from the melting pot into the die, in well known manner. The die is then swung forwardly into the horizontal position shown in dotted lines to facilitate the unclamping of the die and the removal therefrom of the finished casting. The die is swung back into the vertical position when the next casting is to be made and the same cycle of operations repeated.

The cylinder 6 is represented as pivotally suspended from the ceiling or other fixed support 7 by any suitable means such as the link 8 having its opposite ends bent to encircle a pin 9 carried by the cylinder and a staple 10 secured to the ceiling. The cylinder is open at its upper end and is provided with a suitable piston 11 having a rod 12 secured thereto and extending downwardly through a suitable stuffing box 13 at the lower end of the cylinder. The lower end of rod 12 is pivotally connected to the holder of die 4, as indicated at 14, preferably at an upper rear edge of the die or holder therefor, the edge of the die at which the same is pivoted to support 3 being considered the forward edge.

Air, or other fluid under pressure, may be supplied to cylinder 6 between the under or working face of the piston and the lower end of the cylinder, which is closed as indicated at 15, by means of a suitable supply pipe 16 and a flexible extension thereof 17. A valve 18 in the air supply pipe 16 may be governed by a foot or hand lever such as is indicated at 19.

In the operation of the device, the casting having been made when the die is in the vertical position indicated, air is admitted to the under side of piston 11 by the opera-

tion of lever 19 whereupon the piston rises and the die and the cylinder are accordingly swung to the left, referring to the drawing. The air supply is shut off when the cylinder has approximately reached a median position between the vertical and horizontal positions of the die, that is to say, when the cylinder crosses the line or plane extending through the pivotal point 5 of the die and the pivotal point 10 of the cylinder. The die will continue to swing forwardly under the influence of its momentum, the descent of the die to the dotted line position being cushioned by the return movement of the piston toward the lower end of the cylinder against the elastic resistance of the air which has been forced into the cylinder through connections 16—17. The die will thus be brought gently into the horizontal position indicated in which it may be suspended by the link formed by the cylinder and rod 12.

When the die is to be returned to vertical position the air supply is again admitted in the same way to the lower end of the cylinder, the piston rising and causing the die to be swung toward the right. The air is again turned off when the cylinder crosses the median line, the die being returned to vertical position by the momentum attained, and being lowered gently into vertical position by the cushioning effect of the air underneath the piston in the same manner as described in connection with the opposite movement.

It will be observed that the effect described is accomplished by suspending the cylinder at such a point, or mounting it in such a position, that movement of the piston in a single direction will serve to swing the cylinder and die to a median position after which the piston will move in the opposite direction against an air or fluid pressure cushion.

It will be understood, however, that my invention is not limited strictly to the exact details of construction described, but that a reasonable range of equivalents is included, and the invention is as broad as is indicated by the accompanying claims.

What I claim is:

1. In a casting machine, the combination of a stationary member, a die pivoted thereto, and adapted to have a die-casting formed therein when in vertical position upon said stationary member, and means for swinging said die from said position to an horizontal position and vice-versa, comprising a fluid pressure cylinder open at its upper end, means pivotally supporting the upper end of said cylinder from an over head support, a piston in said cylinder, a rod extending from said piston through the lower end of said cylinder and pivotally secured to said die, and means for supplying fluid under pressure, as desired, within said cylinder below said piston, said cylinder being so positioned as to cross a line joining the pivotal supports of said cylinder and said die in swinging both to its vertical and horizontal positions.

2. In a casting machine, the combination of a stationary member, a member pivoted thereto, adapted to be swung from the vertical position to a forwardly-directed position, and means for swinging said pivoted member from either position to the other, comprising a fluid pressure cylinder, having one end pivotally supported from a fixed support, a piston in said cylinder, a rod extending from said piston through the opposite end of said cylinder and pivotally secured to said pivoted member, and means for supplying fluid under pressure, as desired, within said cylinder on one side of said piston, said cylinder being so mounted that movement of said piston under fluid pressure, in the same direction, swings said pivoted member from either extreme position to a median position, past which it is carried by momentum.

3. In a casting machine, the combination of a stationary member, a member pivoted thereto, adapted to be swung from the vertical position to a forwardly-directed position, and means for swinging said pivoted member from either position to the other, comprising a fluid pressure cylinder, having a piston therein and piston rod extending through one end of the cylinder, said cylinder and piston with its rod comprising co-acting elements, one of said elements having one end pivotally supported from a fixed support, and the other of said elements having its opposite end pivotally secured to said pivoted member, and means for supplying fluid under pressure, as desired, within said cylinder, said elements and fluid supply means being so arranged that admission of fluid to said cylinder will swing said cylinder and pivoted member away from either extreme position toward the other.

This specification signed and witnessed this 14th day of March, 1918.

JOHN KRALUND.

Witnesses:
JOSEPH HONIG,
OTTO A. SCHROEDER.