United States Patent [19]

Wong et al.

[11] **3,916,417**

[45] **Oct. 28, 1975**

[54] **MULTIFUNCTION ARRAY ANTENNA SYSTEM**

[75] Inventors: **Jimmy L. Wong; Daniel G. Gonzalez; Michael R. O'Sullivan,** all of Los Angeles, Calif.

[73] Assignee: **Technology Service Corporation,** Santa Monica, Calif.

[22] Filed: **Dec. 22, 1971**

[21] Appl. No.: **210,741**

[52] **U.S. Cl.** ..... **343/854;** 343/100 LE

[51] **Int. Cl.²** **H01Q 3/26**

[58] **Field of Search** ..... 343/853, 854, 858, 100 LE

[56] **References Cited**

UNITED STATES PATENTS

3,028,591	4/1962	Mattingly	343/853
3,435,453	3/1969	Howard	343/854
3,460,144	8/1969	Hannan	343/853
3,618,092	11/1971	Waineo	343/853

Primary Examiner—Eli Lieberman

Attorney, Agent, or Firm—Antonio M. Fernandez

[57] **ABSTRACT**

A multifunction receiving array antenna system is provided which utilizes energy normally rejected (reflected or dissipated) by antennas employing amplitude tapering to derive auxiliary antenna outputs in addition to the main output. This is achieved at negligible degradation to the performance of the main antenna channel by configurationally redesigning the array feed structure so as to divert the normally rejected energy to additional antenna ports. The technique is compatible with applications, such as radar applications, in which the antenna must be used to transmit as well as to receive. The auxiliary outputs could, for example, have broad, relatively omnidirectional, patterns useful for side-lobe cancellation and side-lobe blanking applications.

16 Claims, 8 Drawing Figures

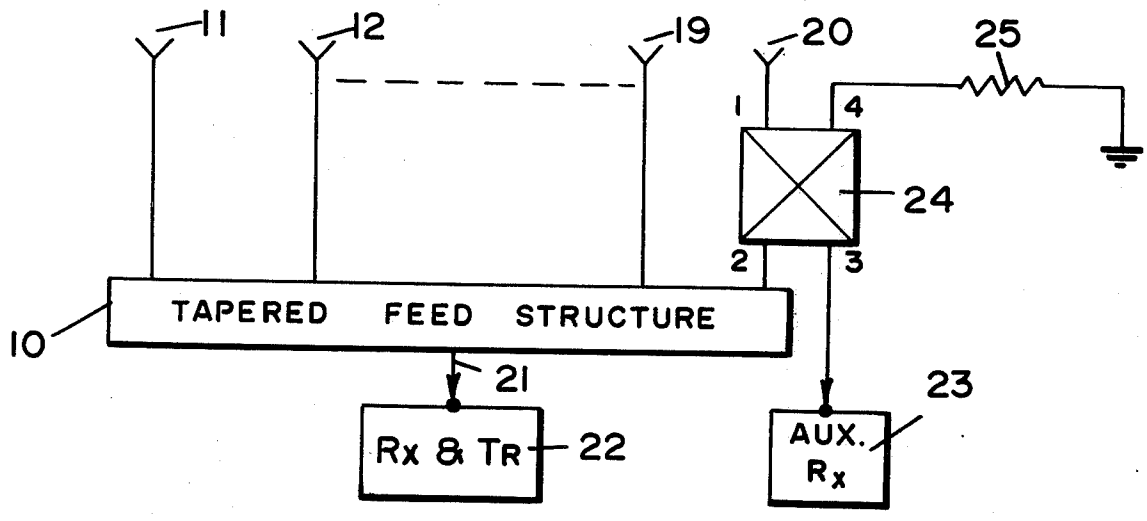

FIG. 1

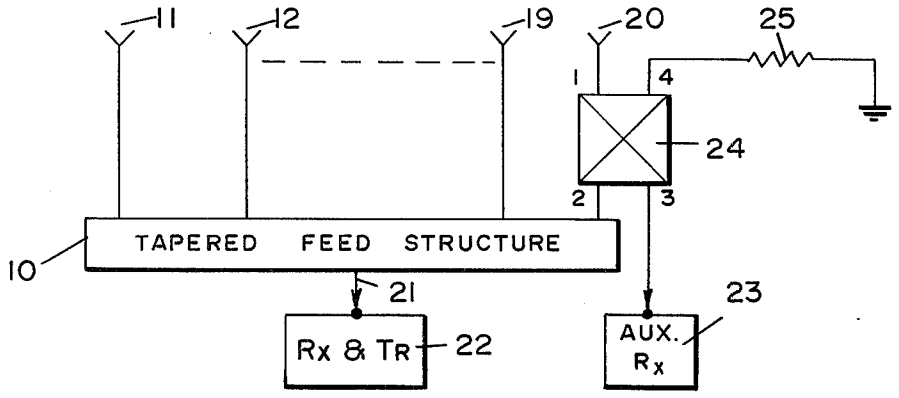

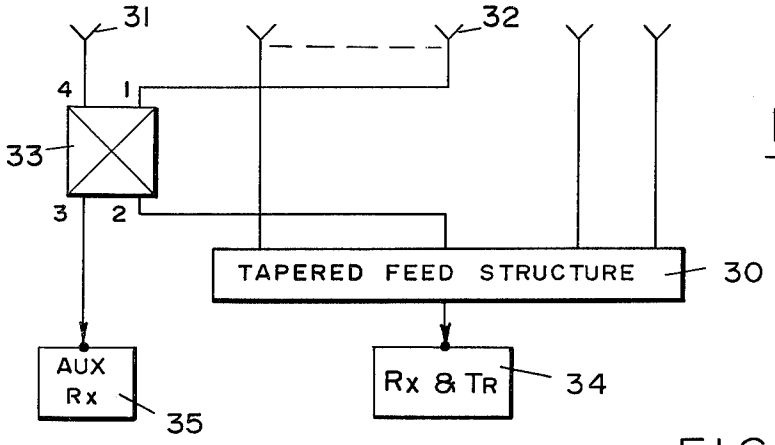

FIG. 2

FIG. 5

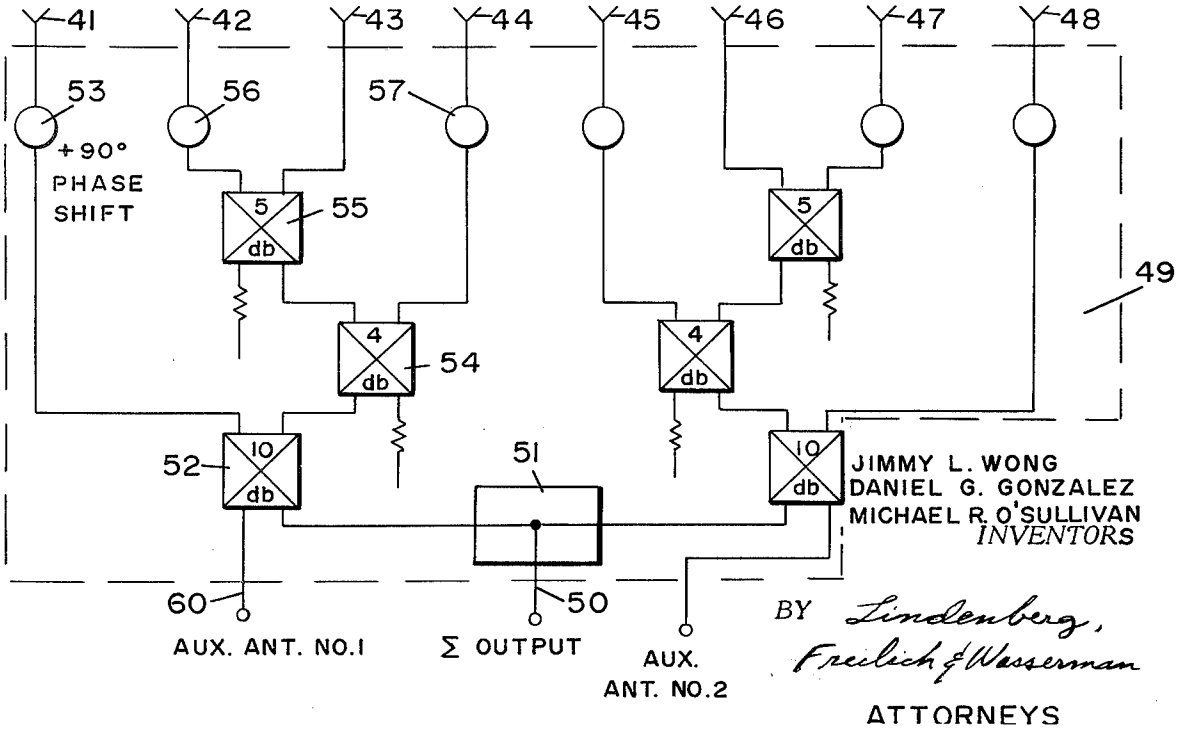

JIMMY L. WONG
DANIEL G. GONZALEZ
MICHAEL R. O'SULLIVAN
INVENTORS

BY Lindenberg, Freilich & Wasserman
ATTORNEYS

FIG. 3a

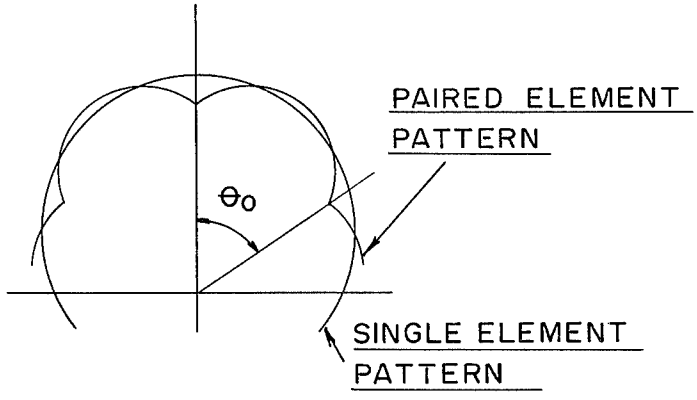

FIG. 3b

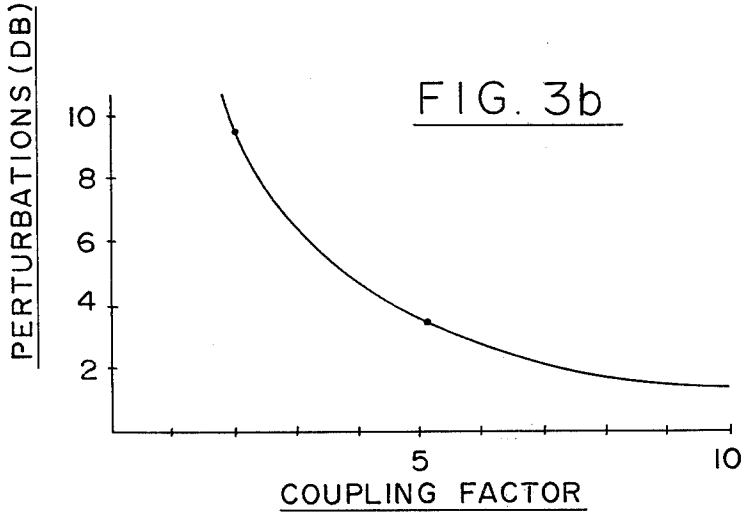

FIG. 3c

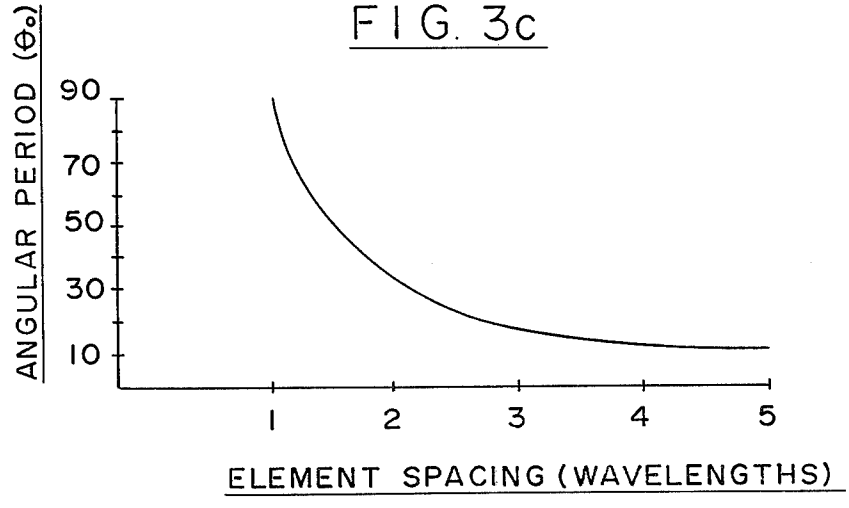

FIG. 4

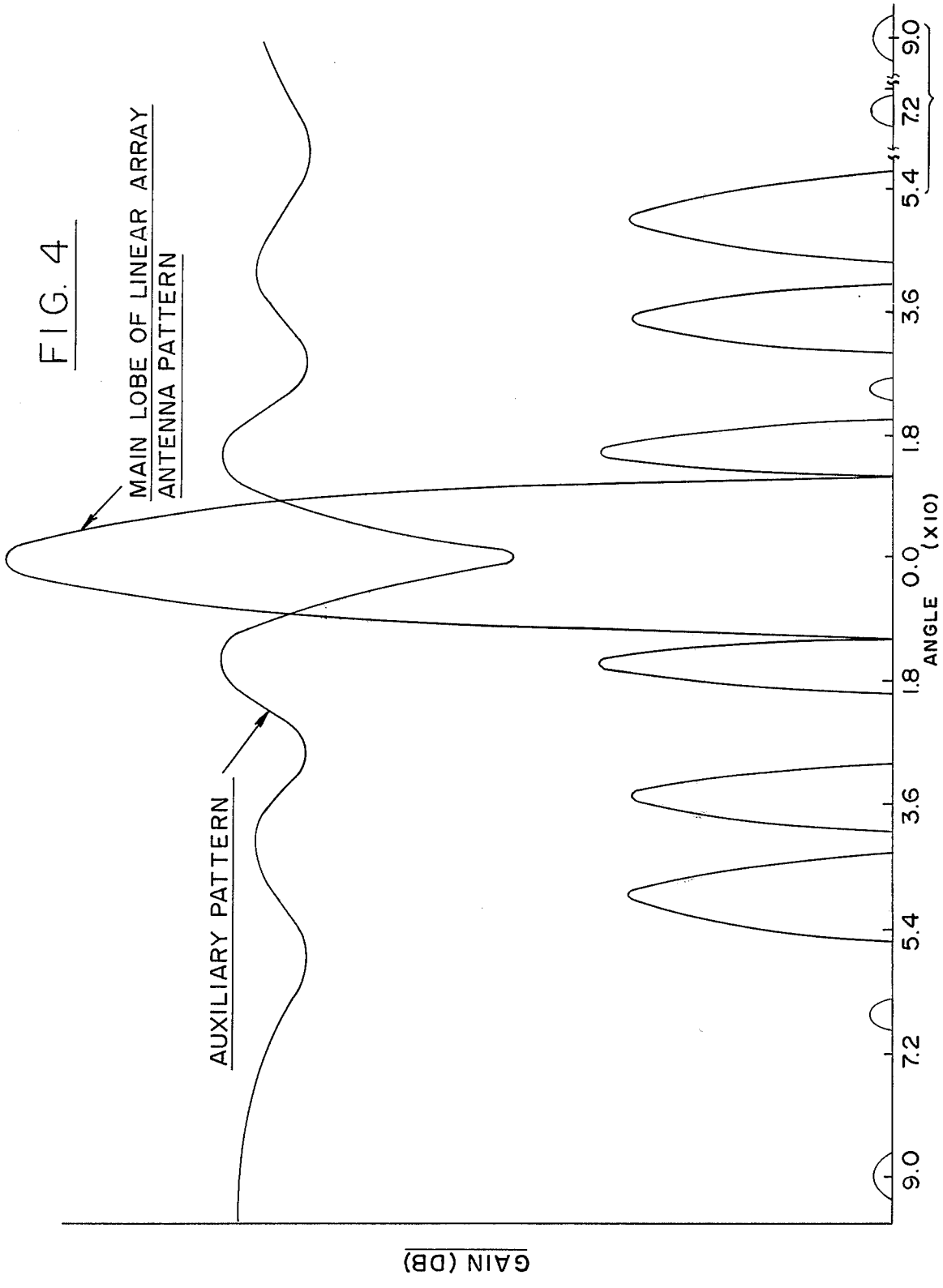
MAIN LOBE OF LINEAR ARRAY ANTENNA PATTERN
AUXILIARY PATTERN
GAIN (DB)
ANGLE (X10)
9.0
7.2
5.4
3.6
1.8
0.0
1.8
3.6
5.4
7.2
9.0

FIG. 6

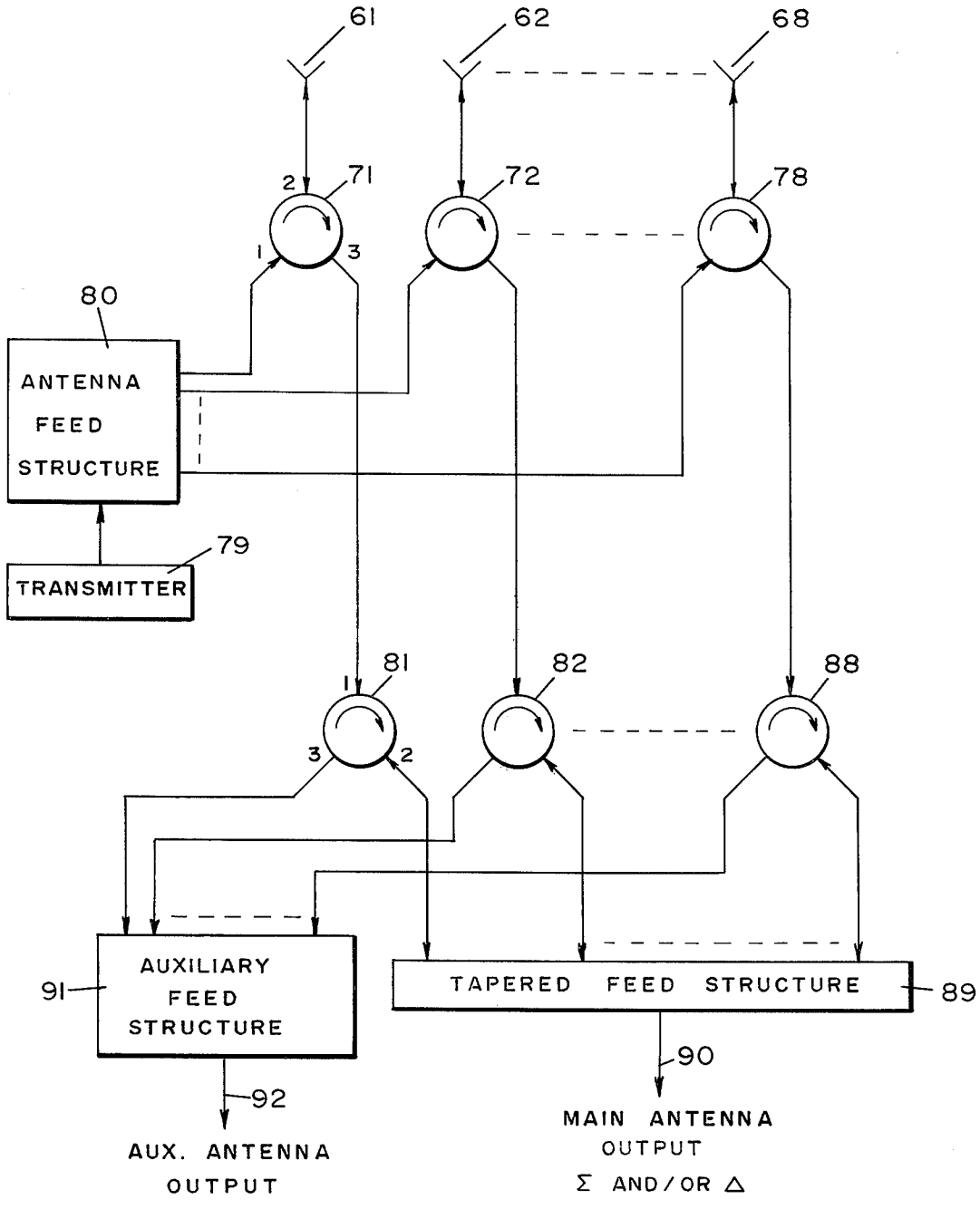
61
62
68
71
72
78
2
1
3
80
ANTENNA FEED STRUCTURE
TRANSMITTER
79
81
82
88
1
3
2
AUXILIARY FEED STRUCTURE
91
TAPERED FEED STRUCTURE
89
90
92
AUX. ANTENNA OUTPUT
MAIN ANTENNA OUTPUT
Σ AND/OR Δ

MULTIFUNCTION ARRAY ANTENNA SYSTEM

BACKGROUND OF THE INVENTION

This invention relates to array antennas, and more particularly to a method and apparatus for achieving an auxiliary array antenna pattern from an array of antenna elements in a system which employs amplitude tapering for the main antenna pattern.

Array antennas are usually provided with some form of amplitude taper (weighting) for low side-lobe radiation. For a given voltage or current aperture distribution $f(x)$, $(-1< \times <+1)$, the aperture efficiency is given by

$$g(\Delta) = \frac{\{\int_A f(x)dx\}^2}{\{A \int_A f^2(x)dx\}} \quad (1)$$

For a uniform ($f(x)$ = constant) distribution, $g(\Delta)$ is equal to one, which indicates that all of the received energy is utilized in the broadside direction. For a tapered distribution ($f(x)$ constant) $g(\Delta)$ is less than one which indicates that not all of the impinging energy is used. That is, the aperture efficiency is less than unity. The fractional portion of the total power on receive that is not used is consequently given, by conservation of energy, as:

$$P/P_o = 1 - g(\Delta) \quad (2)$$

where:

P_o is the total power received by the elements,

P is the rejected power, and

$g(\Delta)$ is the aperture efficiency given by Equation (1).

As a simple illustrative example, consider a triangular aperture distribution $f(x)$, that is to say a distribution where

$f(x) = 1-|x|, -1 \leq x \leq 1$

The aperture efficiency of this example given by Equation (1) for the one-dimensional case is 0.75. This says that 75 percent of the total energy received by the array is ultimately utilized. Simultaneously, 25 percent of the energy is rejected. In other words, in order to achieve the desired weighting while receiving, some energy received by the elements is rejected by the feed structure which combines the signals from the elements into the sum channel signal.

The unused energy may be rejected in several ways dependent upon the method and configuration of the array feed structure. In a feed structure employing three port junctions (i.e., branch line tee dividers), the unused power is reflected due to impedance mismatches occurring at junctions in the feed structure and is subsequently reradiated. That rejected energy is, of course, lost to the system once it is reradiated. In a feed structure employing four port devices, such as power dividers (directional couplers and the like) magic tees, circulators, and other similar devices, the energy is not reflected but is generally dissipated in the terminated fourth port generally to be lost to the system. There are also feed structures that are combinations of three and four port devices in which the rejected energy is partially reradiated and partially dissipated in terminated ports.

It is desirable to use this rejected energy to develop auxiliary radiation patterns without any change in the main pattern. This can be accomplished by reconfiguring the feed structure to recover a portion of the normally reflected energy (3 port devices) or the energy dissipated in the terminations (4 port devices). The possible auxiliary patterns are as numerous as the possible configurations of the feed structure, but all configurations would derive their broadside received energy from the normally rejected energy of the antenna. The utility of such a technique would be very high in systems where it would be difficult to physically place additional separate antennas to derive these auxiliary patterns. For example, this method would be quite desirable in airborne radar systems where an auxiliary, relatively omnidirectional, radiation pattern is needed for possible side-lobe cancellation or side-lobe blanking, but when limited space within a radome may not permit the mounting of a separate antenna without incurring significant mechanical or electrical degradation of the system.

SUMMARY OF THE INVENTION

In accordance with the present invention, received energy normally rejected by one or more elements of an array antenna (because of element weighting provided in the feed structure) is used to form one or more auxiliary radiation patterns for use either independently of the main pattern, or in some combination with the main pattern. One or more coupling means are employed to couple an element, or elements, selected to form an auxiliary pattern to the feed structure for the main pattern with coupling factors which assure the desired weighting of elements as seen by the main antenna port on both transmit and receive, and that also assure that a portion of the power normally rejected by the weighted feed structure is coupled to an auxiliary receiver.

The novel features that are considered characteristic of this invention are set forth with particularity in the appended claims. The invention will best be understood from the following description when read in connection with the accompanying drawings.

BRIEF DESCRIPTION OF THE DRAWINGS

FIG. 1 is a schematic block diagram illustrating the basic concept of the present invention.

FIG. 2 is a schematic block diagram illustrating an exemplary embodiment of the present invention.

FIGS. 3(a) to 3(c) illustrate graphs useful in understanding the configuration of the embodiment of FIG. 2.

FIG. 4 is a graph of a main antenna pattern and an auxiliary antenna pattern useful in understanding a more specific exemplary embodiment shown in FIG. 5.

FIG. 6 is a schematic diagram of another exemplary embodiment.

DESCRIPTION OF THE PREFERRED EMBODIMENTS

The concept of the invention is to utilize that energy normally rejected by a tapered feed structure of an array antenna system to form an auxiliary antenna pattern without appreciably disturbing the main antenna pattern, and without any significant loss of transmitted energy in the structure employed to form the auxiliary patterns. To illustrate the basic concept of the invention, reference will first be made to a schematic block diagram in FIG. 1 which achieves the desired result, i.e., a useful auxiliary pattern, with a small but insignificant lose in transmitted energy. Techniques for imple-

menting the concept of this invention with no loss of transmitted energy will then be described with reference to FIGS. 2, 5 and 6.

Referring to FIG. 1, a ten-element array is shown with a feed structure 10 assumed to be comprised of microwave T junctions for power-dividing while transmitting and for summing while receiving. The feed structure 10 couples the elements 11, 12 . . . 20 to a sum channel 21 connected to a receiver and transmitter 22 in the usual manner. The feed structure is, for example, one having a 30-dB Dolph-Chebyshev weighting of transmitted power through the elements, which implies maximum power transmission from the center element, and a tapering of power to successive elements on each side. Because of this tapering (element weighting), only a small percentage of the transmitted power is radiated from the end element 20. The remaining power is radiated from the other nine elements. The elements are shown as dipoles, but may be slots or other like radiation elements, including elements comprised of a combination of slots on an end plate of a wave guide, for example.

On receive, only a small percentage of the power received through the sum channel 21 comes from the end element 20. Since approximately equal power is incident on each of the antenna elements, a substantial percentage of the power received by the end element 20 does not reach the sum channel 21. Instead, it is reflected by the feed structure, due to mismatches occurring at junctions in the structure and reradiated.

In accordance with the present invention, a portion of the power received by the end element 20, is made available to an auxiliary receiver 23 to form an omnidirectional pattern. That is accomplished by using a 3-dB directional coupler 24 to couple the end element 20 to the feed structure 10. That coupler divides the transmitted power in port 2 from the feed structure equally between ports 1 and 4. Thus, half the power at port 2 is transmitted through the element 20 and half is absorbed by a termination device (matched load) 25 connected to port 4. Half of the received power incident on the element 20 goes to the feed structure through port 2, and half goes to the auxiliary receiver through port 3. The coupled signal at port 3 will lead or lag the directly propagated signal at port 2 by 90°, depending upon the specific configuration of the coupler. Since that is known in advance, the relative phase of the signal in the auxiliary receiver 23 may be readily adjusted if it is desired that it be in phase, or in some other phase relationship, with respect to the signal in the sum channel 21.

From the foregoing, it is evident that directional couplers are four-port microwave junctions. They are most commonly comprised of two parallel waveguides with two or more appropriately spaced small apertures between them, or a continuous aperture in the special case of a 3-dB coupler. The power into any one port is divided between two other ports, and the fourth port is isolated. Accordingly, on transmit, the auxiliary receiver 23 connected to port 3 is isolated, and will not affect or be affected by the power transmitted. On receive, the termination device 25 connected to port 4 is isolated and will not affect the power received. However, because the coupling factor of the coupler 24 is selected to divide the transmitted power at port 2 equally between ports 1 and 4, the feed structure 10 must be configurationally redesigned when coupler 24 is added so that twice the power to be radiated through the end element 20 is directed to port 2 of the coupler. Also, since the received power at port 1 is divided equally between ports 2 and 3, only half of the power incident on the element 20 is directed to the auxiliary receiver. The greater part of the other half of the received power is reflected by the feed structure to be partially reradiated through port 1 and partially absorbed by the load through port 4.

It should be further understood that although only a linear array is referred to herein to describe the invention, planar and conformal arrays may also embody the invention. In such a case, any known technique may be employed to appropriately combine planar other the outputs of discrete elements in columns and rows to form antenna elements as the term element is used herein. Accordingly, the term "element" is employed hereinafter to refer to a discrete element in a linear array or a group of combined elements in a planr or conformal array. Each discrete element may, of course, be a slot, dipole or any other radiator in a radar system or an analagous device in some other system, such as a sonar system. Accordingly, while the concept of the present invention is to be described with particular reference to radar antenna systems, it should be understood that it is applicable by direct analogy to othe antenna systems adapted for receiving other forms of propagated energy waves, such as sound waves for sonar systems. Accordingly, the terms energy, power, radiation patterns, coupling means, feed structure, antenna ports, and the like are intended to apply directly to other antenna systems embodying the invention.

The result of the arrangement shown in FIG. 1 is: a directional array antenna having a pattern with a main lobe and side lobes of low amplitude (i.e., having a pattern consistent with the 30dB Dolph-Chebyshev weighting); and an omnidirectional antenna coupled to the auxiliary receiver.

To achieve the same result without loss in the sum-channel gain (peak element-pattern gain) resulting from power absorbed by a load, an alternative embodiment may be provided as shown in FIG. 2. There a feed structure 30 may be configurationally designed so that an end element 31 and an element 32 near the center of the array are fed from a common junction through a directional coupler 33. The coupling factor is so chosen that transmitted power is distributed to the two elements in the proper ratio to achieve the desired weighting, and the received power in the two elements is transferred to the feed structure in the power ratio to achieve the same weighting on receive. For example, this may be a ratio of approximately nine to one, depending upon the position in the array of the inboard element 32. In that manner no power is being lost to a load while transmitting through the array.

On receive, port 3 of the coupler 33 connected to an auxiliary receiver 35 receives power that would have been reflected out of both elements in a normal feed structure comprised of microwave T junctions. Port 2 of coupler 33 receives signals from elements 31 and 32 in the proper ratio to provide an input to the feed structure 30 that will result in the same main pattern (i.e., the same taper) on receive as on transmit.

The received signals from ports 1 and 4 of the coupler 33 combine in port 3 with a phase relationship which depends upon the angle to the source of the signal being received. Accordingly, the combination of

elements 31 and 32 will yield an omnidirectional pattern that is scalloped. The magnitude and frequency of these scallops will depend upon the space between the two elements and the coupling factor, as shown in FIGS. 3a to 3c for a typical spacing and coupling factor. FIG. 3a illustrates a single element pattern for comparison with a paired-element pattern. The amplitude of perturbations on the paired-element pattern which cause the scallops is a function of the coupling factor, as shown in FIG. 3*b*. The angular period θ_o of the scallops is a function of element spacing in wavelengths, as shown in FIG. 3c.

If elements of a second pair are similarly combined, but with a different spacing, and possibly a different coupling factor, the pattern produced by the second pair may be combined with the pattern of the first pair to reduce the amplitude and increase the frequency of the scallops for a pattern that is more nearly omnidirectional. Still other patterns may be formed by combining patterns of additional selected pairs of elements. In each case, an auxiliary antenna pattern is provided from power normally rejected.

But first consider FIG. 4 which shows an antenna pattern for a linear array. The pattern has a main lobe and a number of side lobes. Such a pattern may be readily developed from an array of eight elements through a tapered corporate feed structure in a conventional manner. The conventional feed structure provides a single sum (Σ) channel, and sometimes also a difference (Δ) channel output.

It may be desirable to provide an auxiliary pattern for side-lobe cancelling or blanking. The prior-art procedure has been to place additional independent antennas near the main antenna array. However, such an auxiliary pattern may be formed from the energy normally rejected by the feed structure used to form the main pattern in accordance with this invention as illustrated by the exemplary embodiment of FIG. 5.

Referring now to FIG. 5, the directional antenna is comprised of a linear array of eight elements 41, 42, . . . 48, and a corporate feed structure 49 to provide a tapered main antenna pattern in a sum channel 50 of the form shown in FIG. 4. The feed structure employs six directional couplers with power division factors of 5, 4, and 10-dB as shown, and 90° phase shifters to compensate for 90° phase shifts in the signals cross-coupled through the couplers. A microwave T junction 51 couples two symmetrical halves of the feed structure to the sum channel.

Because of the symmetry, only one half of the feed structure need be described. The radiation transmitted through the elements 41 through 44 from the T junction is divided by a 10-dB coupler 52. The smaller portion of the divided energy is radiated through the element 41 via a 90° phase shifter 53 to compensate for the 90° phase shift of that divided energy through the coupler 52.

The larger portion of the energy divided by the coupler 52 is further divided by a 4-dB coupler 54, with the larger portion of the energy being coupled directly to a 5-dB coupler 55 for further division between the elements 42 and 43. Phase shifters 56 and 57 assure the proper phase relationship of the radiant energy transmitted through the antenna elements.

On receive, the couplers divide and combine the energy received by the elements 41 through 44, while the T junction 51 combines similarly processed energy received through the elements 45 to 48 to provide the desired main beam pattern. At the same time, most of the energy normally rejected by the coupler 52 is transmitted directly to an auxiliary output channel 60.

As can be seen in FIG. 4, the auxiliary pattern provides a reasonable margin of gain over the side-lobe levels of the main antenna pattern, and may therefore be used for side-lobe cancelling or blanking. For side-lobe cancellation, the amplitude and phase of the auxiliary antenna output is adaptively adjusted using conventionaly signal processing techniques to match those of a signal source being received through a main antenna side lobe. The adjusted auxiliary output is then substracted from the main antenna output for coherent side-lobe cancellation. The null in the auxiliary pattern does not detract, but rather enhances the side-lobe cancellation. For further enhancement of side-lobe cancellation, a more pronounced null or notch may be produced by a different configuration of the feed structure, particularly if a large number of elements are used in the array. The main pattern would, of course, also be different, but the general form of a main lobe having significantly greater gain than side lobes would still be characteristically present.

Referring now to FIG. 6, a second exemplary embodiment is shown using two banks of circulators for an array of eight antenna elements 61, 62 . . . 68, namely a first bank of circulators 71, 72 . . 78 for coupling the antenna elements to a transmitter 79 through a feed structure 80, and a second bank of circulators 81, 82 . . . 88 for coupling the antenna elements to a tapered feed structure weighted summing network 89. The sum of the antenna element return signals is thus made available at an output channel 90 for a main antenna pattern. The difference may also be provided as an output from the network 89.

A circulator is a microwave transmission device employing a ferrite in a cylindrical waveguide surrounded by an annular magnet to rotate the polarization of a transmitted wave. An additional port is provided at one end of the cylindrical waveguide by a suitable hybrid junction or dual-mode transducer. An input TE_{01} rectangular mode in the main port at the one end, such as port 1 of the circulator 71, excites a TE_{11} mode in the cylindrical waveguide which is rotated and transmitted to the port at the other end, port 2, but which is not coupled to the additional port at the one end, port 3. An input signal at port 2 is similarly rotated by the cylindrical waveguide and coupled to port 3. No energy is coupled from port 2 to port 1. A more complete description of a circulator may be found in the literature, such as at pages 8–20 and 8–21 of the Radar Handbook edited by Merril I. Skolnik and published by McGraw-Hill Book Company (1970).

The first bank of circulators 71 through 78 permit the transmitter 79 to be coupled to the antenna elements 61 through 68 via the conventional feed structure 80 (which may or may not be tapered), and permits the antenna elements to be coupled to the tapered feed structure 89 to form, at the output 90, the main antenna pattern. Because the network 89 is weighted, energy received from the antenna elements will be rejected and reflected, but will not be reradiated through the elements due to the second bank of circulators. Instead, the rejected energy is coupled by the second bank of circulators to an auxiliary feed structure (summing network) 91 which forms at its output channel 92

an auxiliary antenna pattern. For example, a return signal from the element **61** is coupled from port **2** to port **3** of the circulator **71** and from port **1** to port **2** of the circulator **81.** Rejected energy from the network **89** which is reflected into port **2** of the circulator **81** is coupled to port **3** which is connected to the auxiliary feed structure **91.** In that manner, the antenna feed structure **80** and the tapered feed structure **89** are not disturbed by the provision for an auxiliary antenna pattern formed from normally rejected energy in accordance with the present invention. In that regard, it should be noted that the feed structure **89** is broadly part of the antenna feed structure, but is here shown separately because it is electrically isolated to permit receiving return signals with a tapered distribution across the array while transmitting with a uniform distribution across the array.

Although particular exemplary embodiments of the invention have been described and illustrated herein, it is recognized that modifications and variations may readily occur to those skilled in the art, such as substitution of other elements for the couplers and circulators shown, and that the basic concept of the invention may be practiced in still other forms, and in still other media, such as sound waves in sonar systems.

What is claimed is:

1. An array antenna comprising a plurality of antenna elements connected to a tapered feed structure, said feed structure having means comprising at least one junction for coupling energy from said elements to a receiver for producing a main antenna pattern at said receiver from the sum of weighted contributions of energy from said elements, the weighted contribution to said sum from each element being a quantity (1-R)E, where for each element E is the total energy received, and R is a weighting factor greater than zero, but less than unity, chosen to provide the taper of said feed structure, whereby a quantity RE of energy is rejected by each element, said coupling means rejecting said quantity of energy, RE, not contributing to said sum by reflection through at least one antenna element or by dissipation at at least one terminated port of a junction, or by partially reflecting energy through at least one antenna and partially dissipating received energy at at least one terminated port of a junction, an auxiliary antenna port, and auxiliary means connected to said feed structure coupling means for forming an auxiliary antenna pattern from at least part of said rejected energy, said auxiliary means including coupling means for directing said rejected energy to said auxiliary antenna port.

2. The combination of claim **1** wherein said auxiliary pattern forming means includes a plurality of coupling means for combining normally rejected energy from a plurality of antenna elements, and coupling energy thus combined to said auxiliary antenna port.

3. In an antenna system of the class having an array of receiving elements connected to a feed structure for combining return signals from said elements in such a manner as to provide at a main output port a main antenna pattern which constitutes a weighted combination of the signals received by the individual elements, means for using received energy normally reflected through at least one antenna element by at least one junction in said feed structure or normally dissipated at a terminated port of at least one junction in said feed structure to form at an auxiliary output port an auxiliary antenna pattern pointed in the same direction as said main antenna pattern, wherein said means includes at least one power divider having a plurality of ports to divide energy divided through one port thereof from at least one element between two other isolated ports thereof, means connecting one of said two other ports of said power divider to said main output port, and means connecting the other of said two other ports of said power divider to said auxiliary output port, the ratio of energy thus divided being so chosen that one of said two other ports of said power divider receives all of the energy required for said main antenna pattern, and the other of said two ports receives the balance of energy received through said one port of said power divider.

4. The combination of claim **3,** wherein said power divider is a directional coupler having a fourth port isolated from said two other ports receiving all of said energy incident on said one port thereof while said antenna is being used for receiving, said fourth port being cross-coupled to said one output port and being coupled to receive energy from at least one antenna element not connected to said one port thereof, and the ratio of energy thus divided by said directional coupler is so chosen that said main output port receives all of the energy required from said elements connected thereto for said main antenna pattern, and said auxiliary output port receives all of the balance of the energy received from said elements connected thereto.

5. The combination of claim **3** wherein said power divider is a directional coupler having a fourth port connected to a termination device, whereby upon transmission, some energy from said feed structure is diverted to said termination device, and upon receiving a return signal from said one antenna element, energy normally dissipated at said fourth port is diverted to said auxiliary output port to form an auxiliary antenna pattern, the amount of received energy not combined at said main output port of said feed structure to form said main antenna pattern being determined by said power divider, and the ratio of energy thus divided being so chosen that said main output port receives all of the energy required from said element for said main antenna pattern.

6. In an antenna system of the class having an array of receiving elements connected to a feed structure for combining return signals from said elements in such a manner as to provide at a main output port a main antenna pattern which constitutes a weighted combination of the signals received by the individual elements, means for using received energy normally reflected through at least one antenna element by at least one junction in said feed structure or normally dissipated at a terminated port of at least one junction in said feed structure to form at an auxiliary output port an auxiliary antenna pattern pointed in the same direction as said main antenna pattern, wherein said means comprises a bank of circulators, one circulator for each antenna element, each circulator having three ports, one port for receiving energy from an antenna element and transmitting it to a second port, said second port being connected to said weighted feed structure to transmit energy received from said one port to said feed structure and to receive energy reflected by said feed structure, said second port transmitting reflected energy received from said feed structure to a third port, and auxiliary feed structure connected to said third port of

each circulator to form an auxiliary antenna pattern at said auxiliary output port.

7. The combination of claim **6** including a second bank of circulators, one circulator for each antenna element, each circulator having three ports, one port connected to receive energy to be transmitted through an antenna element, a second port connected to receive energy from said one port and transmit it through one antenna element, and to receive energy from said one antenna element for transmission to a third port, said third port of a circulator in said second bank being connected to said one port of said first-mentioned bank of circulators.

8. In an amount of the class having an array of elements and a tapered feed structure having at least one junction for coupling said elements to a receiver for producing a main antenna pattern, said feed structure normally having received energy reflected at certain junctions due to impedance mismatches occuring at said junctions, said reflected energy being reradiated, or being partially absorbed in terminations at said certain junctions and partially reradiated, the combination of at least one directional coupler for coupling energy received by at least one of said elements to one of said feed-structure junctions and to an auxiliary receiver for forming an auxiliary pattern, the coupling factor of said directional coupler being selected to divide between two ports energy received through a third port from at least one of said elements, the ratio of energy thus divided being so chosen that one of said two ports receives all of the energy required for said main antenna pattern, and the other of said two ports receives the balance of energy received through said third port.

9. The combination of claim **8** wherein said directional coupler couples one antenna element to said feed structure and said auxiliary receiver.

10. The combination of claim **9,** wherein said coupler has a fourth port isolated from said two ports receiving all of said energy incident on said third port while said antenna is being used for receiving, said fourth port being cross-coupled to one of said two ports while said antenna is being used for transmitting, including a termination device at said fourth port for absorbing energy cross-coupled thereto while transmitting, and wherein power distribution of said feed structure is adjusted to direct sufficient power to said one element for a desired antenna pattern taper to account for energy absorbed by said termination device.

11. The combination of claim **8** wherein said coupler has a fourth port isolated from said two ports receiving all of said energy incident on said third port while said antenna is being used for receiving, said fourth port being isolated from said two ports while said antenna is being used for receiving, and said fourth port being cross-coupled to one of said two ports while said antenna is being used for transmitting, and wherein said fourth port is connected to receive energy incident on at least one element.

12. The combination of claim **11** wherein said third and fourth ports of said directional coupler are coupled to receive directly energy incident on two elements widely spaced in said tapered antenna.

13. The combination of claim **11** wherein said third and fourth ports of said directional coupler are coupled to receive energy from two separate junctions in said feed structure.

14. In an array antenna comprising a plurality of antenna elements connected to a tapered feed structure for forming a weighted sum of the outputs of all of said elements, the weighted contribution to said sum from each element being greater than zero and less than unity, said feed structure providing said weighted sum at a main output port, means connected to said feed structure for providing at an additional port an auxiliary pattern formed from energy received through one or more of said elements and rejected by a part of said feed structure forming said weighted sum at said main output port due to a weighting of less than unity for energy from said one or more of said elements used by said feed structure for forming a main pattern at said main output port, thereby obviating the need for any, additional antenna elements to form said auxiliary pattern.

15. The combination of claim **14** wherein said auxiliary output means includes a plurality of coupling means for combining energy received through a plurality of antenna elements and rejected by said feed structure due to a weighting of less than unity for energy from said plurality of elements used for forming said main pattern.

16. An antenna system having an array of receiving elements connected to a tapered feed structure to form, with an aperture efficiency less than unity due to the taper, a main antenna pattern at a main output port, and means for forming an auxiliary antenna pattern, said means including a second output port and coupling means for coupling to said second output port energy received by said elements, but lost to said main antenna pattern due to the taper of said feed structure, as manifested by the less than unity aperture efficiency, thus providing a useful auxiliary pattern at said second output port without degrading said main antenna pattern at said main output port.

* * * * *