Feb. 21, 1961 B. A. BUSS ET AL 2,972,510

LAUNDRY MACHINES

Filed Aug. 26, 1957 3 Sheets-Sheet 1

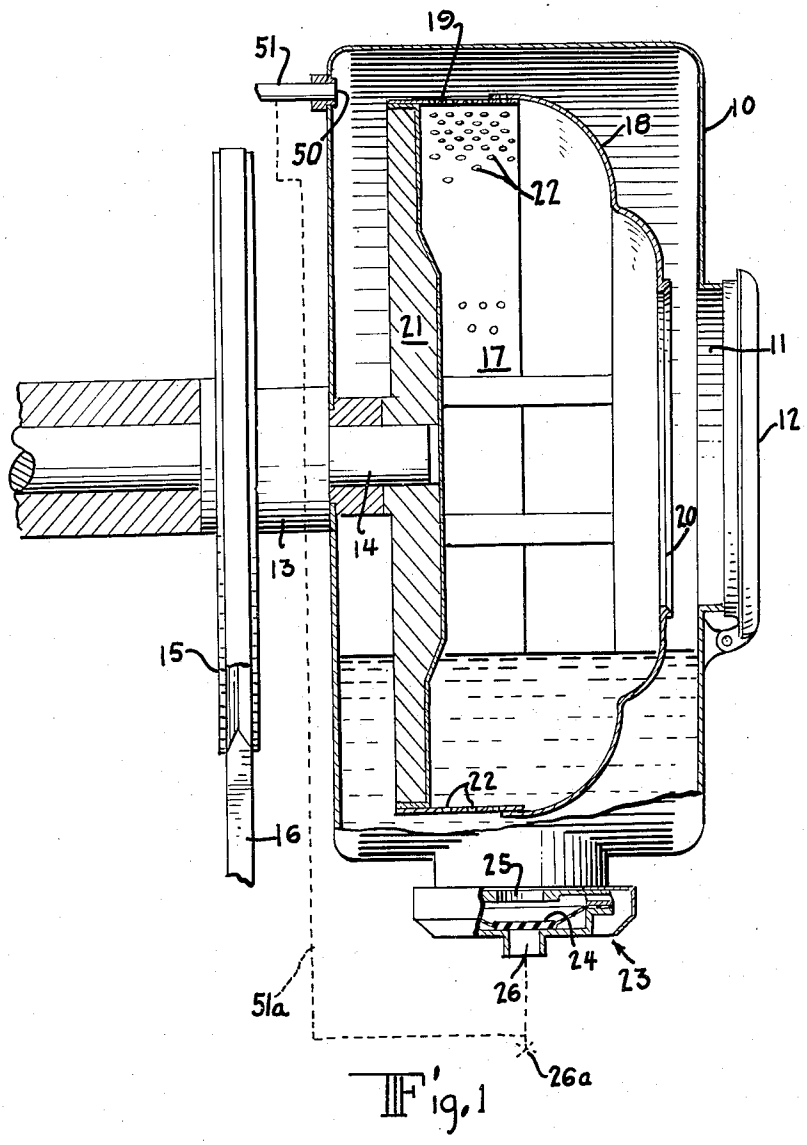

Fig. 1

INVENTORS
Benjamin Alvin Buss
John E. Krynski
BY
Pollard, Johnston, Smythe & Robertson
ATTORNEYS

Feb. 21, 1961 B. A. BUSS ET AL 2,972,510

LAUNDRY MACHINES

Filed Aug. 26, 1957 3 Sheets-Sheet 2

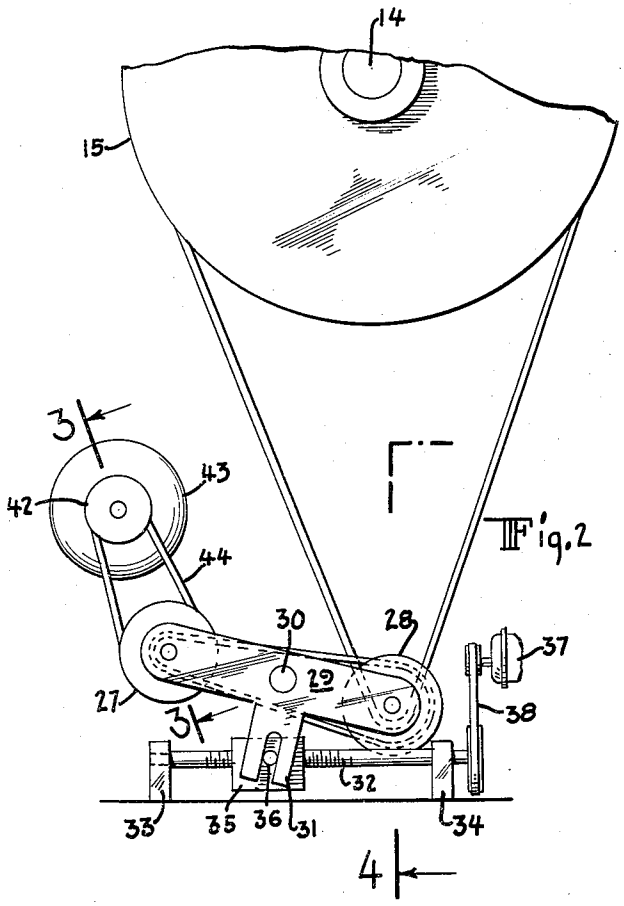

Fig. 2

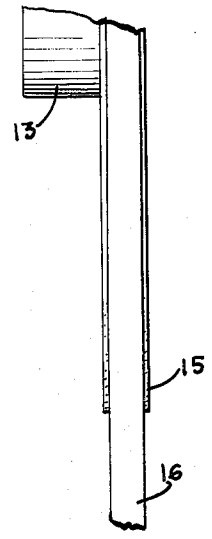

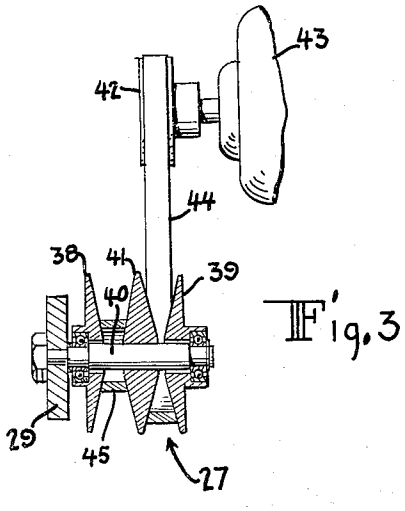

Fig. 3

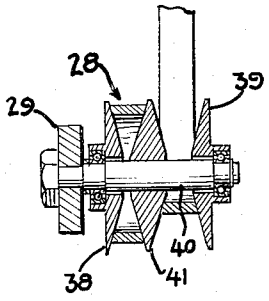

Fig. 4

INVENTORS
Benjamin Alvin Buss
John E. Krynski
BY
Pollard, Johnston, Smythe & Robertson
ATTORNEYS

Feb. 21, 1961 B. A. BUSS ET AL 2,972,510

LAUNDRY MACHINES

Filed Aug. 26, 1957 3 Sheets-Sheet 3

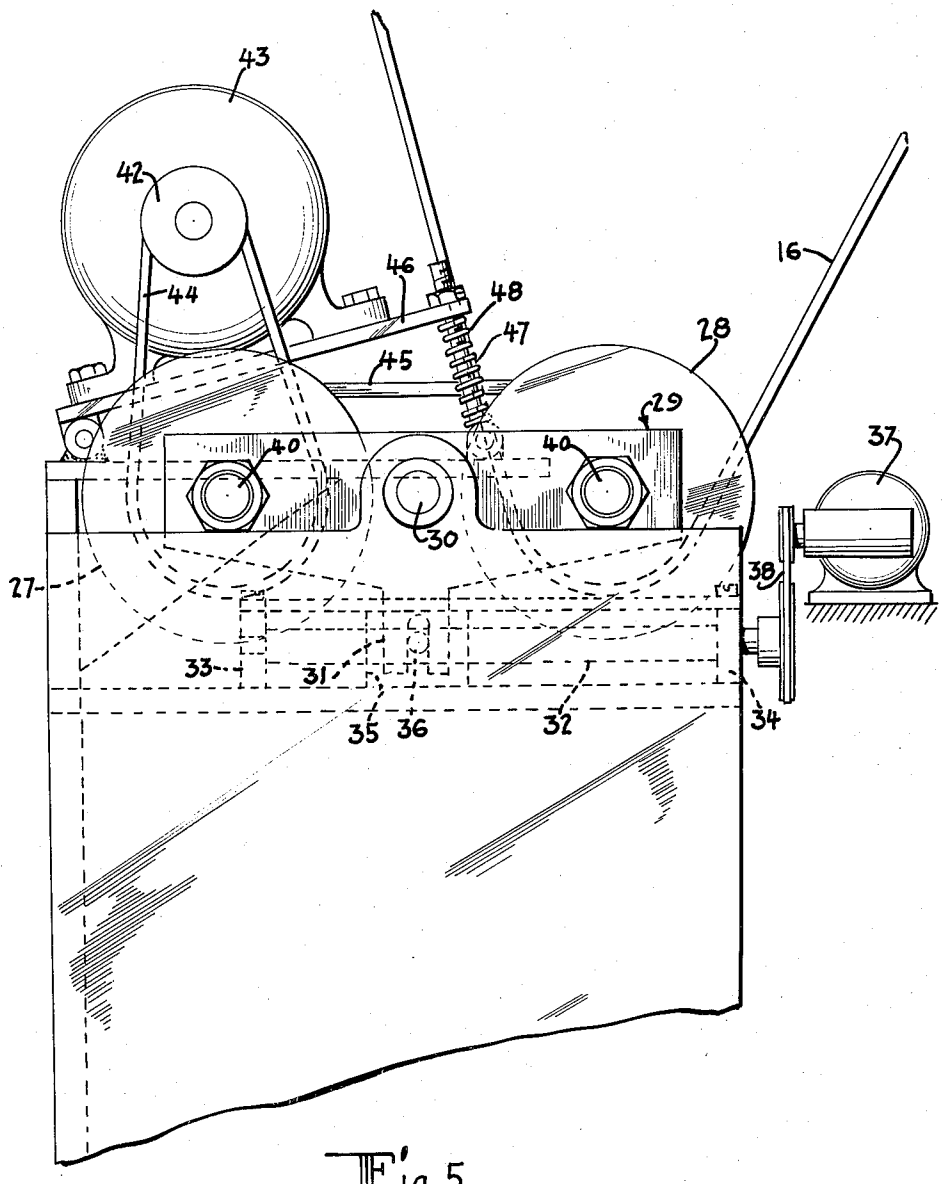

Fig. 5

INVENTORS.
Benjamin Alvin Buss
John E. Krynski

BY
Pollard, Johnston, Smythe & Robertson
ATTORNEYS

United States Patent Office 2,972,510 Patented Feb. 21, 1961

2,972,510

LAUNDRY MACHINES

Benjamin Alvin Buss and John E. Krynski, East Moline, Ill., assignors to American Machine and Metals, Inc., New York, N.Y., a corporation of Delaware

Filed Aug. 26, 1957, Ser. No. 680,067

2 Claims. (Cl. 8—159)

This invention relates to multiple-speed laundry machines in which the fluid is centrifugally extracted from the materials, and particularly to methods and apparatus for evenly distributing materials in the rotatable receiver before the receiver is rotated at extracting speed.

The invention is particularly adapted for use with a tumbler type laundry machine in which the fluid is extracted from the materials being washed by rotating the receiver at a high extracting speed, the receiver or drum having perforations therein and being rotatable in a drum. In such a machine the rotatable receiver is rotated at a relatively low speed to wash the materials and is then rotated at a high centrifuging speed to extract substantially all of the fluid from the materials. The problem of maintaining balance when the receiver in such a machine is rotated at extracting speed has been a perplexing one. If there is an unbalance of the load in the receiver, the unbalance is magnified at the high extracting speed and destructive vibration often results. This vibration is especially dangerous in machines having receivers which are rotatable about a horizontal axis and which are supported at only one end thereof. Various attempts have been made in recent years to balance the load in the receiver. As an example, the use of ballast or water tanks which are selectively filled and emptied in order to balance any variations in the conformation of the materials about the periphery of the receiver has been suggested. Inwardly extending axial projections on the interior surface of the receiver designed to force the materials being washed to properly distribute themselves have also been utilized. None of the suggested changes are entirely satisfactory, especially in the horizontal receiver type of washer extractor wherein the receiver is supported at only one end, since the slightest unbalance in the receiver often results in destructive vibration when the receiver is rotated at a high extracting speed.

One of the objects of this invention is to provide a laundry machine in which the materials in the receiver are evenly distributed therein before the receiver is rotated at extracting speeds.

Another object of this invention is to provide a laundry machine in which the materials in the receiver are evenly distributed therein while there is fluid in the receiver and shell.

A further object of this invention is to provide a laundry machine in which the receiver is rotated at a relatively low speed in a shell to wash the materials in said receiver, at a higher predetermined speed to evenly distribute the materials while fluid is in the receiver, and at a still higher extracting speed for removing the fluid from the materials.

A still further object of this invention is to provide a novel type of variable speed drive for a laundry machine which permits the speed of rotation of the receiver to be varied infinitely up to maximum speed.

Another object of this invention is to provide a laundry machine wherein the bulk of the fluid in the receiver when the materials are being distributed is dumped promptly from the receiver and shell after the speed of rotation of the receiver exceeds a predetermined amount.

The laundry machine of the invention includes a rotatable receiver and means for rotating the receiver in a shell at a relatively low tumbling speed for washing, at a predetermined intermediate speed for evenly distributing the materials in the receiver and at a still higher speed for extracting fluid from the materials being washed. The cleaning fluid is in the receiver and shell when the receiver is rotated at the predetermined intermediate speed so that the materials will become evenly distributed in the receiver.

In a further aspect, it has been found desirable to round the front wall of the receiver or drum in such a manner as to cause the clothes to move toward the rear of the receiver to the point nearest the bearing support for the receiver. This is particularly true in a horizontal open end laundry machine which is supported only by a bearing adjacent its rear end.

The foregoing and other objects, features and advantages hereof will become apparent from the following description and drawings which are merely exemplary.

In the drawings:

Fig. 1 is a side elevational view in cross-section of the laundry machine of the invention;

Fig. 2 is a front elevational view of the drive mechanism for the laundry machine of Fig. 1;

Fig. 3 is a cross-sectional view taken along the line 3—3 of Fig. 2 looking in the direction of the arrows;

Fig. 4 is a cross-sectional view taken along the line 4—4 of Fig. 2 looking in the direction of the arrows;

Fig. 5 is an enlarged view of the drive mechanism of Fig. 2.

As can be seen in Fig. 1, the invention is illustrated in conjunction with a laundry machine of the type having a receiver rotatable on a horizontal axis in which the receiver is supported at only one end. The machine includes a housing or shell **10** having an opening **11** which is adapted to be closed by a door **12**. Rotatably mounted within bearing **13** is a shaft **14**. A pulley **15** is attached to the portion **14** extending beyond the housing. Rotation of pulley **15** by belt **16** results in the rotation of shaft **14**.

Mounted on the shaft for rotation therewith is a receiver or drum **17** which is wholly within housing **10** and spaced from the walls thereof. The front wall **18** of the receiver is sloped outwardly toward the rear so as to urge the materials against side wall **19** of the receiver when the receiver is rotated at high speeds. The receiver has a circular opening **20** in its front wall which is aligned with circular opening **11** in the housing, thereby permitting the loading and unloading of the materials to be washed. The rear wall **21** of the receiver is preferably heavier than the other walls thereof so that the major portion of the force exerted when the receiver is rotated at extracting speed is exerted at the point where shaft **14** is connected to rear wall **21**. Conventional punched holes, as at **22**, are provided in side wall **19** in order to permit the washing fluid forced from the load to escape from the receiver in the usual manner.

Dump means, generally shown at **23**, permit the bulk of the washing fluid to be removed from the housing **10** after the speed of rotation exceeds a predetermined speed. The dump valve illustrated in Fig. 1, which is the type of valve preferred, may be a valve of the type disclosed in Patent No. 2,443,816. This type of valve utilizes a diaphragm **24** which holds dump opening **25** closed under the pressure of fluid in pipe **26** which is connected to inlet **51** by line **51***a*. When the receiver is rotated at a predetermined speed, a solenoid switch (not shown) can be actuated to open valve **26***a* and drain liquid in pipe **26** so as to reduce the pressure below

diaphragm 24. The cleaning fluid in housing 10 then forces diaphragm 24 away from opening 25 permitting the cleaning fluid to flow rapidly out of housing 10.

In order to permit the accurate control of the speed of rotation of receiver 17 the variable speed drive, which will now be described, is preferably utilized. The variable speed drive includes a pair of variable pulleys 27 and 28 mounted for rotation on opposite ends of a beam 29. Beam 29 is pivotally mounted near its center, as at 30, and has a downward bifurcated or U-shaped extension 31. A screw shaft 32 journalled near its ends in uprights 33 and 34 has a movable member 35 mounted thereon. Member 35 has a longitudinal internally threaded bore (not shown), the threads of which engage the external threading on screw shaft 32 so that as shaft 32 is rotated, member 35 moves to the left or right (as seen in Figs. 2 and 5) depending on the direction of rotation of shaft 32. A pin 36 extends to the side of member 35 and is slidingly engaged between the legs of U-shaped extension 31. Thus, as screw shaft 32 is rotated, beam 29 is pivoted about pivot point 30. In order to cause the rotation of shaft 32 in the desired manner, a small reversible motor, shown schematically at 37, is provided which is connected by a belt or chain 38 to a pulley on shaft 32. The operation of motor 37 may be controlled by any suitable actuating or timing mechanism. Also it can be manually operated.

The variable pulleys utilized in the drive mechanism include a pair of spaced apart discs 38 and 39 fixed in position on a shaft 40 and a disc 41 between discs 38 and 39 which is axially slidable along shaft 40. Both variable pulleys (27 and 28) are identical in construction. A pulley 42 is connected to the output shaft of a driver motor 43 for rotation therewith. Motor 43 is mounted on a plate 46 which is resiliently mounted as by rod 47 and spring 48 above variable pulley 27. A belt 44 connects pulley 42 and variable pulley 27 while belt 16 connects variable pulley 28 and receiver driving pulley 15. Belts 44 and 16 are connected to their corresponding variable pulleys on the same side of the respective slidable center disc 41. A belt 45 mounted on the other side of the slidable center disc 41 of each of the variable pulleys 28 and 29 connects these pulleys together. Therefore, rotation imparted by drive motor 43 to pulley 42 is transmitted to variable pulley 27, to variable pulley 28, then to pulley 15 and finally to receiver 17 to rotate the same.

The speed of rotation of receiver 17 is varied by the pivoting of beam 29 about its pivot. As can be seen from a study of Figs. 3 and 4, as the beam 29 is moved from its Fig. 5 position to its Fig. 2 position, pulley 27 moves closer to pulley 42 and belt 44 moves toward the outer periphery of discs 39 and 41 of pulley 27. This permits belt 45 to move radially toward shaft 40 of pulley 27 which in turn allows belt 45 to move toward the outer periphery of discs 38 and 41 of pulley 28 and belt 16 moves radially toward shaft 40 of pulley 28, thus increasing the speed of rotation of receiver 17. Pivotal movement of beam 29 in the opposite direction reverses the action of the belts. Due to the action of motor 37 the pivotal movement of beam 29, and consequently the change in the speed of rotation of receiver 17, is steady and gradual throughout.

Operation

In operation, water and washing supplies are introduced into housing or shell 10 and the materials to be washed are introduced into receiver 17. The water or other washing fluid may be introduced into the housing through an inlet port 50 connected to a suitable source of water (not shown) by a pipe 51. The receiver or drum 17 is then rotated either alternately in one direction and then the other, or it is rotated in only one direction. This rotation of the receiver is at a relatively low speed, i.e. at a speed low enough so that the clothes fall from the outer periphery of the receiver when they reach a position adjacent the top of housing 10, by the action of gravity thereon. While the receiver is rotated at this speed various washing and rinsing operations are completed. Following the last rinse, water is left in shell or housing 10 so that the clothes in receiver 17 may be moved through the water.

Control motor 37 is then energized by the timing mechanism (not shown) of the laundry machine so as to pivot beam 29 about point 30, and thereby gradually increase the speed of rotation of the drum or receiver 17. As the rotational speed of the receiver reaches a predetermined speed, i.e. the speed at which the clothes do not fall from the wall 19 of the receiver and yet are free to move slightly therefrom, the clothes distribute themselves evenly about wall 19 due to the loosening action of the water in housing 10 which is kept at a predetermined level. This predetermined level is a level at which the clothes against the bottom portion of wall 19 are just covered, so that the clothes that are sticking out too far will be redistributed evenly when they pass through the water. The exact speed and the exact water level will vary due to the differences in the various sizes of receivers and housings used. These differences result in variations in the generated centrifugal force and variations in the area which the water or cleaning fluid must fill.

As the rotational speed of the receiver increases beyond the predetermined intermediate speed at which the materials are evenly distributed, dump means 23 is opened to permit the water or cleaning fluid in housing 10 to drain therefrom. The receiver is then rotated at a high extracting speed, up to about 800 r.p.m., so that the moisture in the clothes is forced out through openings 22 in receiver 17 to substantially completely dry the clothes. Since the clothes have been evenly distributed in the receiver prior to the time when the receiver is rotated at extracting speed, very little, if any, vibration is generated by the receiver.

If desired, the driving can serve in a regenerative braking operation by changing the ratio of the variable drive so that the rotating receiver tends to drive the motor over synchronous speed of the motor.

It is to be understood that the described exemplary embodiment is merely intended for the purpose of illustration, and that the principles of the invention are not intended to be limited thereto, except as defined in the appended claims.

What is claimed is:

1. A method for preventing destructive vibration in a washer extractor having a receiver for the materials to be washed, said receiver being rotatable in a housing on a substantially horizontal axis, comprising the steps of rotating said receiver through water in said housing at a low tumbling speed to wash the materials, then rotating said receiver through water held in said housing at a predetermined speed higher than said tumbling speed so that said materials are evenly distributed in said receiver, said predetermined speed being the speed at which the materials do not fall from the circumferential surface of the receiver and yet are free to move slightly therefrom, then draining the water from said housing only after said receiver is rotating at a speed higher than said predetermined speed, and then rotating said receiver at an extracting speed which is substantially higher than said predetermined speed so as to remove substantially all of the water from said materials.

2. A method for preventing destructive vibration in a washer extractor having a receiver for the materials to be washed, a housing for said receiver and a dump valve for draining water from said housing, said receiver being rotatable on a substantially horizontal axis, comprising the steps of rotating said receiver at a low tumbling speed through water in said housing to wash the materials, closing said dump valve, introducing water into said re-

ceiver while said dump valve is closed, rotating said receiver at a predetermined speed which is higher than said tumbling speed while the water is held in the housing by said closed dump valve so that said materials become evenly distributed in said receiver, said predetermined speed being the speed at which the materials do not fall from the circumferential surface of the receiver and yet are free to move slightly therefrom, then opening said dump valve to drain the water from said receiver and housing only after the receiver is rotating at a speed higher than said predetermined speed, and then rotating said receiver while said dump valve remains open at an ex-

tracting speed which is substantially higher than said predetermined speed so as to remove substantially all of the water from said materials.

References Cited in the file of this patent

UNITED STATES PATENTS

2,556,490	Chamberlin	June 12, 1951
2,588,535	Kahn	Mar. 11, 1952
2,666,332	Phares	Jan. 19, 1954
2,693,710	Huelsdonk	Nov. 9, 1954
2,706,899	Meyer	Apr. 26, 1955
2,757,531	Fox	Aug. 7, 1956