July 20, 1943. J. I. CARLSON 2,324,480

BRUSH MAKING MACHINE

Filed June 5, 1940 2 Sheets-Sheet 1

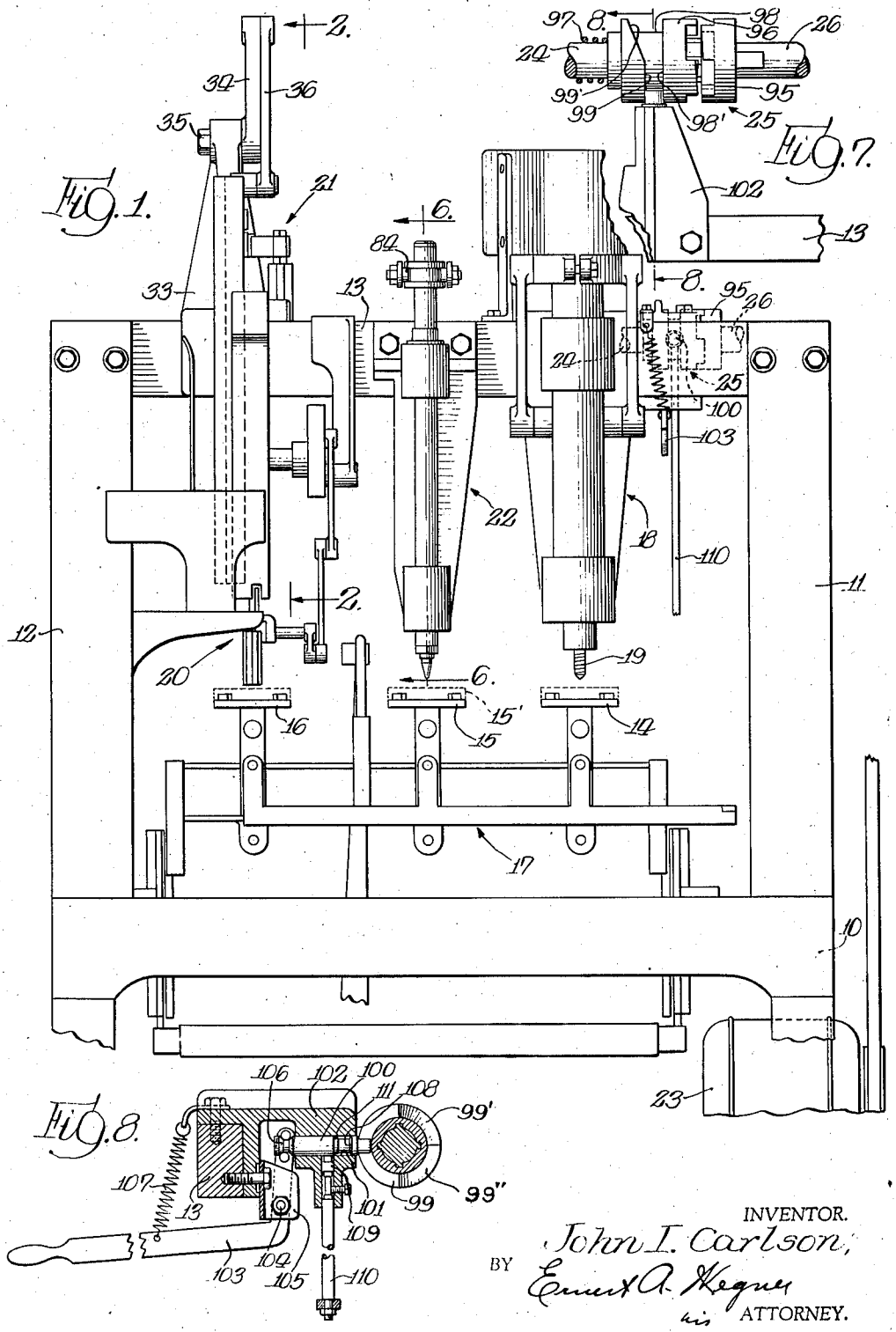

Fig. 1.

Fig. 7.

Fig. 8.

INVENTOR.
John I. Carlson,
BY Ernest A. Hegner
his ATTORNEY.

July 20, 1943. J. I. CARLSON 2,324,480

BRUSH MAKING MACHINE

Filed June 5, 1940 2 Sheets-Sheet 2

Fig. 2.

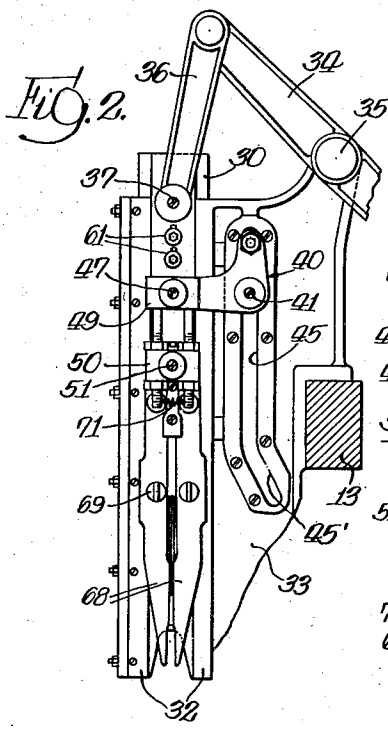

Fig. 3.

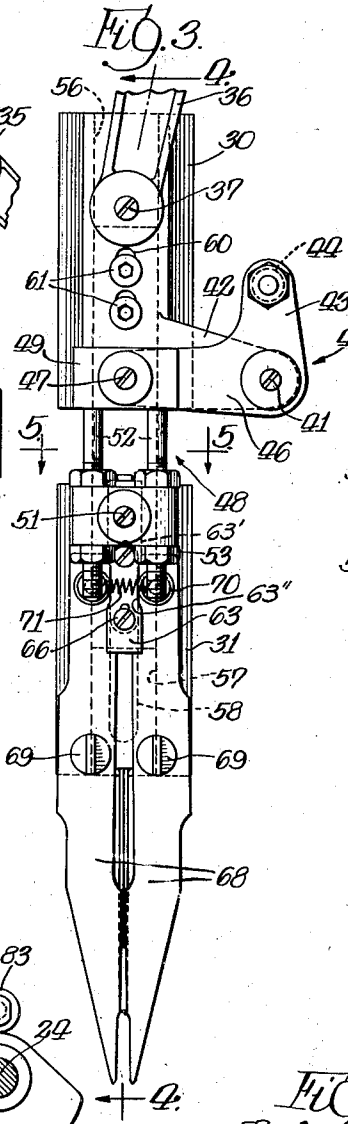

Fig. 4.

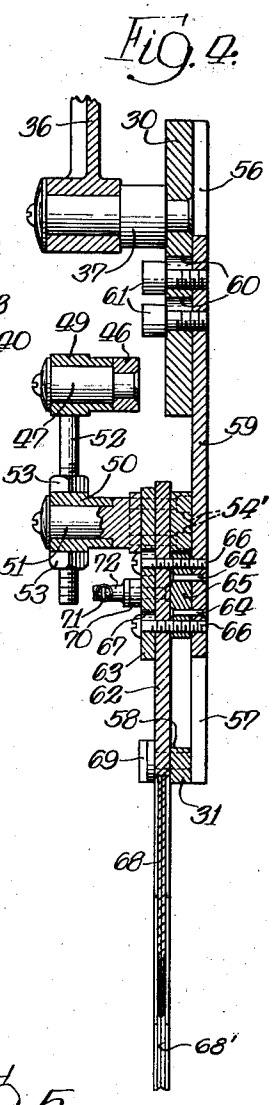

Fig. 6.

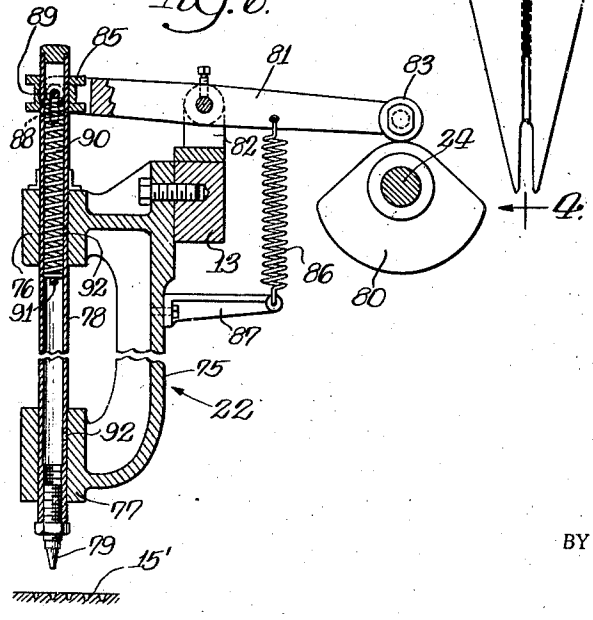

Fig. 5.

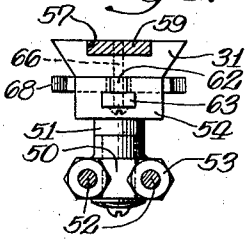

INVENTOR.
John I. Carlson.
BY Ernest A. Hegner
ATTORNEY.

Patented July 20, 1943 2,324,480

UNITED STATES PATENT OFFICE

2,324,480

BRUSHMAKING MACHINE

John I. Carlson, Aurora, Ill., assignor to Carlson Tool & Machine Co., Aurora, Ill., a partnership composed of John I. Carlson and Clifford D. Carlson

Application June 5, 1940, Serial No. 338,859

13 Claims. (Cl. 1—2)

The invention relates generally to brush making machines and has as a general object to provide a brush making machine of new and improved construction.

A primary object of the invention is to provide a brush making machine in which the reciprocatory parts in particular are given a unique, light weight but sturdy construction rendering the machine capable of high speed operation.

More particularly, it is an object to provide a staple driving mechanism which is of light weight yet sturdy construction.

Another object is to provide a staple driving mechanism in which the slides of the mechanism are connected in a unique manner making the same unusually rigid.

Still another object is to provide a staple driving mechanism in which the cam for the jaws is also employed as guiding means therefor, eliminating certain parts, and in which the cam is mounted in a unique manner, assuring proper adjustment of the cam as a guide means at all times.

Other objects and advantages will become apparent from the following description, taken in connection with the accompanying drawings, in which:

Fig. 1 is a front elevational view of the top portion of a brush making machine embodying the features of the invention.

Fig. 2 is a sectional view taken approximately along the line 2—2 of Fig. 1.

Fig. 3 is an enlarged elevational view of the driving mechanism only shown in Fig. 2.

Fig. 4 is a sectional view taken along the line 4—4 of Fig. 3.

Fig. 5 is a sectional view taken along the line 5—5 of Fig. 3.

Fig. 6 is a transverse sectional view taken approximately along the line 6—6 of Fig. 1.

Fig. 7 is a fragmentary and enlarged top plan view showing the clutch and clutch throw-out mechanism.

Fig. 8 is a sectional view taken along the line 8—8 of Fig. 7.

While the invention is herein shown and will hereinafter be described in a preferred embodiment, it is not intended that the invention is to be limited thereby to the specific construction disclosed, but on the contrary it is intended to cover all modifications and alternative constructions falling within the spirit and scope of the invention as defined by the appended claims.

The brush making machine, shown particularly in Fig. 1 for purposes of disclosure, is of the general type of brush making machine well known in the art. Typical of such a machine is that shown in the patent to Fisher No. 1,512,583, dated October 21, 1924. Generally such a machine comprises a bed or base 10 from which rise two upright frame members 11 and 12 connected at their upper free ends by a cross member 13. Disposed above the bed 10 are a plurality of tables or supports 14, 15 and 16. These tables are mounted upon and actuated by suitable mechanism, herein designated 17, which is operable to move the tables both transversely and longitudinally of the machine in an intermittent step by step movement corresponding to the spacing of the tufting of the brush, as well as to tilt the tables to permit certain of the tufts to be placed at an angle to obtain the desired flare of the brush.

The table 14 is adapted to carry a blank wooden block shaped to form the brush back. Mounted on the cross member 13 above the table 14 for action on the brush back carried by the table is a drill head 18. This drill head is reciprocated and the drill 19 carried thereby continuously rotated so as to bore holes in the block carried by the table 14, in conformity with a predetermined pattern. The table 16 is adapted to support a brush back which has been formed with the necessary tuft receiving holes and disposed thereabove for cooperation therewith is a tuft supplying mechanism 20 and a staple forming and driving mechanism 21. Also disposed above the table 16, but not shown in the drawings because forming no part of the invention, is a staple wire feeding means and a cutting off means. These are of conventional construction with the latter including anvils functioning in the staple cutting and shaping operations. Like the drill head 18, the mechanisms 20 and 21 and the wire feeding and cutting off means are intermittently operated in order intermittently to secure tufts in holes of the brush back at the same time that corresponding holes are being drilled in a blank brush back carried on the table 14.

The third table 15 is adapted to carry a template 15' having holes therein corresponding to the desired pattern that the brush is to have. Cooperating with this template is a hole finder 22 which is also mounted on the cross member 13 and reciprocated in timed relation with the reciprocation of the drill head and staple driving mechanism to assure that the tables 14, 15 and 16, which are all interconnected, are accurately positioned.

Inasmuch as the various cams, eccentrics and

like mechanism, for imparting to the table actuating and supporting mechanism 17, the drill head, the tuft supplying and staple driving mechanisms 20 and 21, and the hole finder 22 their intermittent and interrelated and timed movements, are of more or less conventional construction and form no part of this invention, the same have not been disclosed herein. For a more complete description and understanding of these basic constructions and operations, reference is made to the Fisher Patent No. 1,512,588. Suffice it to say, therefore, that the various mechanisms are driven preferably from an electric motor 23 through such cams and like mechanism mounted on a main cam shaft 24 (see Fig. 7), coupled through the medium of a clutch 25 with a drive shaft 26, and also usually mounted on an auxiliary shaft (not shown) which is driven at a low R. P. M.

It is a feature of this invention to provide a staple driving mechanism having many enhanced and improved qualities. The staple driving mechanism 21, as best seen in Figs. 2 to 5, comprises an upper or driving slide 30 and a lower or driven slide 31, which are reciprocable in a vertically disposed guideway 32 formed in a plate 33 mounted on the cross member 13 and disposed in a plane transversely of the brush making machine. The upper or driving slide 30 is directly actuated from means on the shaft 24 through the medium of a lever 34 which is pivoted intermediate its ends on a stud 35 projecting from the plate 33 at its uppermost portion. One end of the lever 34 engages, as stated, means (not shown) on the shaft 24, while the other end has pivotally connected thereto a link 36 in turn pivotally connected at its remaining end to a stud 37 fixed on the slide 30. The slide 30 is, through the lever 34, given a reciprocatory motion being driven through one complete cycle with each revolution of the shaft 24.

A driving connection between the upper slide 30 and the lower slide 31 is formed through the medium of a bell crank 40 which is pivoted at 41 on a bracket 42 projecting laterally from the lower portion of the upper slide 30. One arm 43 of the bell crank 40 carries a follower 44 which engages in a cam groove 45 formed in the plate 33. Throughout its major length the cam groove 45 extends parallel with the guideways 32, but at its lower end has a portion 45' which diverges slightly from the vertical and from the guideways 32. The other arm 46 of the bell crank carries a stud 47 and is connected by a link, generally designated 48, to the lower slide 31. The link 48 is composed of a cross head 49 pivoted on the stud 47, a cross head 50 pivoted on a stud 51, and a pair of bolts 52 depending from the cross head 49 and adjustably secured to the cross head 50 through the medium of nuts 53. The stud 51 has a U-shaped base 54 and is secured to the upper end of the slide 31 by bolts 54' (see Fig. 4). It is believed apparent from the foregoing that during downward movement the slides 30 and 31 will move in unison so long as follower 44 of crank 40 is in the main, parallel portion of cam groove 45 for there will be no angular movement of crank 40. As slide 30 carries crank 40 down to the point where follower 44 enters portion 45' of the cam groove, however, the crank 40 will be rocked clockwise, as viewed in Fig. 2, and thus cause the slide 31 to move slower than the slide 30 to effect relative movement between the slides which draws them toward one another. The necessity and purpose of this relative movement will presently become more apparent.

To enhance the rigidity of the staple driving mechanism, and particularly to strengthen the same better to withstand the strain resulting from the reaction of the bell crank 40 and to prevent binding in the guideways 32, normally resulting from such lateral strain, the upper and lower slides are interconnected in a unique manner. Each of the slides has formed in its bottom, inner or underneath face or side a longitudinally extending channel 56 and 57, respectively. Additionally formed in the lower slide is an elongated slot 58 extending longitudinally of the slide throughout the major portion of its length. The channels 56 and 57, as best seen in Fig. 5, are made wide and shallow with their width parallel with the plane of the slides so as to receive the ends of an interconnecting member 59 which is of a rigid flat stock bar. The member 59 is received in the channels 56 and 57 with a slidable but snug fit, and it will be seen that, with the width of the member 59 disposed in the plane of the slides 30 and 31 and snugly received in the channels 56 and 57, it is extremely effective, though comparatively light, in maintaining the slides in true alinement and against twisting which would result in their binding in the ways 32.

The interconnecting member 59 is rigidly but adjustably secured to the upper slide 30. To that end the slide 30 has formed therein a pair of slightly elongated apertures 60 through which bolts 61 extend into threaded engagement with the interconnecting member 59. The engagement of the member 59 with the lower slide is a sliding engagement and the lower end of the member 59, moreover, forms a support for a staple driver 62 and a cam 63. To that end there is carried on the interconnecting member 59 an elongated block 65 which is adapted to be slidably received within the slot 58. This block 65 may be formed as an integral part of the member 59, but for convenience in manufacture is preferably separately formed and then integrally and rigidly secured to the member 59 by means of rivets 64. On top of the block 65 is placed the staple driver 62 and on top of the driver 62 is placed the elongated cam 63. The cam, the driver 62, and the block 65 are rigidly secured to the member 59 by a pair of bolts 66 which extend through suitable apertures formed in the cam, the driver and the block, and are threaded into the member 59. As best seen in Fig. 4, the apertures 67 formed in the cam 63 are preferably slightly elongated so that the cam may have a limited longitudinal adjustment.

Mounted on and extending generally parallel with the slide 31 are a pair of jaws 68 which serve in the downward movement of the slide 31 to shape into a staple a previously cut length of wire and to form a guide for the staple as it is driven into the brush back. To that end the jaws 68 are pivoted intermediate their ends on pins 69 at the lowermost portion of the slide 31 so that the lower half of the jaws extend beyond the slide while the upper halves overlie and are guided by the slide 31. At its upper end, each jaw 68 carries a cam follower 70 engaging the cam 63, these followers being held in engagement with the cam by means of a tension spring 71 attached at its ends to projecting ends of the studs 72 on which the followers 70 are rotatably mounted. At its lower end each jaw has formed in the inner edge a groove 68' (see Fig. 4) bet-

ter to receive and guide a staple. In order to eliminate guide screws, which normally bear against the outer faces of the jaws 68 at their upper ends to serve in retaining the jaws in proper position, the cam 63 herein is made of sufficient width to overlap the jaws in all positions thereof. To assure that the cam will at all times be properly spaced from the slide 31 so as not to bind the jaws 68, the block 65 is made just slightly thicker than the thickness of the slide 31 at the slot 58, while the jaws are equal in thickness to the upper portion of the driver 62. With the block of such thickness and the driver 62 and the jaws 68 of equal thickness, it will be apparent that the cam 63 will be properly spaced simply by tightening the bolts 66.

Cam 63 has at its upper end a wide portion 63' (see Fig. 3) and intermediate its ends a narrower portion 63''. The cam is so positioned that the followers 70 ride on the narrower portion 63'' throughout the time that the follower 44 is in the main, parallel portion of the cam groove 45. Inasmuch, however, as the cam 63 is rigid with the slide 30 rather than the slide 31, the followers 70 will move up onto the wide portion 63' as the slides are given their relative movement. This causes the jaws 68 to converge at their lower ends to impart an inward set to the legs of the staple. This relative movement of the slides, of course, also effects relative movement between the driver 62 and the jaws 68, causing the driver to drive the staple out of the jaws.

It is believed apparent from the foregoing that, due to the unique construction of the stapling mechanism just disclosed, an extremely rigid slide mechanism is provided which is unusually effective in preventing lateral twisting of the slides and thus in eliminating binding of the slides in the guideways 32. At the same time, a greatly shortened driver 62 is employed and the possibility that the mechanism will be improperly adjusted and cause binding of the jaws is eliminated. In spite of the increased rigidity, the weight of the mechanism has been reduced, making possible increased productiveness of the machine because of a higher permissible rate of reciprocation.

The hole finder 22, previously mentioned briefly, is more fully disclosed and claimed in my copending divisional application Serial No. 379,807, filed February 20, 1941. Suffice it to say, therefore, that it comprises a bracket 75 bolted to the cross member 13 and providing vertically spaced bearings 76 and 77 in which is reciprocable a finder rod 78. The rod 78 is preferably tubular and at its lower end carries a tip 79 which is adjustably secured to permit compensation for high or low settings of the table 15. The pin is driven from a cam 80 fixed on the shaft 24 through a lever 81 pivotally mounted intermediate its ends on a bracket 82 secured on the top of the cross member 13. At one end the lever 81 carries a cam follower 83, while at its other end it is bifurcated and carries pins 84 (see Fig. 1) which engage with a collar 85 on the rod 78. The cam follower 83 is retained in contact with the cam 80 by means of a tension spring 86 connected at one end to the lever 81 intermediate the pivot point and the follower 83, and at the other end to a bracket 87 projecting laterally from the bracket 75. While the lever 81, cam 80, and spring 86 are so arranged that the lever 81 is positively driven during the down stroke of the rod 78 and spring returned, a yieldable driving connection is interposed between the rod 78 and the lever 81 to prevent injury to the machine should the tip 79 fail to enter a hole in the template. To that end, the collar 85 is mounted for limited movement longitudinally of the rod 78. Such limited movement is effected by forming the rod 78 with diametrically opposite slots 88 extending longitudinally of the rod through which a pin 89 of the collar 85 projects. Within the rod 78 is a compression spring 90 bearing at one end against the pin 89 and at the other end against a pin 91. Preferably the rod 78 is provided with oil holes 92 through which lubricant may be supplied to the bearings 76 and 77 by filling the rod 78 with lubricant.

In brush making machines of the type disclosed, the machine is usually started and stopped through the medium of the clutch 25 and, moreover, the machine is started and stopped with each brush. Inasmuch as in certain machines the shaft 24 may be driven as high as 360 R. P. M., there is quite a shock when the clutch is engaged. While it is possible to make the clutch of such construction as to withstand this shock, much difficulty has been experienced in the past in providing a clutch throw-out or engagement mechanism capable of withstanding the shock. The provision of an improved clutch engagement and throw-out mechanism in which there is no shock to the mechanism is now the feature of my divisional and copending application Serial No. 379,808, filed February 20, 1941, and is claimed in that application. Suffice it to say, therefore, that the clutch is of the jaw type having one element 95 fixed on the drive shaft 26 and a complementary element 96 splined on the shaft 24. The latter element 96 is normally and constantly urged toward engagement with the element 95 by a spring 97. Formed in the clutch element 96 is a peripheral cam groove 98 with one side wall 98' which is straight, while the opposite side wall has a straight and parallel portion 99 extending over approximately 180°, a portion 99' extending over approximately 90° which is disposed at an angle to the plane of the straight portions of the side walls and flares outwardly, and a complementary angle portion 99''.

Adapted to cooperate with the cam groove 98 in the element 96 is a pin 100 which is slidably supported in a bore 101 formed in a bracket 102 bolted to the cross member 13. The pin 100 has two positions, namely, a withdrawn position in which it is out of engagement with the element 96, and a projected position, shown in Figs. 7 and 8, in which it engages in the cam groove 98. The pin 100 is so positioned longitudinally of the shaft 24 that when it is in engagement with the narrow portion of the cam groove 98 the clutch will be disengaged. It is understood, of course, that the clutch is rotated in a clockwise direction, as viewed in Fig. 8, so that when the pin 100 is first shifted to its extended position it will engage the inclined portion 99' of the cam groove so that the element 96 will be gradually disengaged as the inclined portion 99' travels past the pin 100. Inasmuch as the angle of the inclined portion 99' with respect to the transverse plane through the cam groove is small, disengagement of the clutch is effected with little shock to the pin 100. The clutch element 96, being the driven element, will upon being disengaged from the element 95 come to rest while the pin 100 is in the narrow portion of the cam groove and thus will be retained in disengaged position until the pin is withdrawn.

The pin 100 is controlled through the medium of a hand operated lever 103 which is pivoted at

104 to a bracket 105 and at its inner end engages a groove 106 formed on the end of the pin 100 for that purpose. The lever 103 is normally urged in a direction to cause extension of the pin 100 by a tension spring 107 connected at one end to the lever 103 and at the other end to the bracket 102. To retain the pin in its withdrawn position, the same is formed with a groove 108 adapted to be engaged by a locking plunger 109 formed on the end of a rod 110 which, as best seen in Fig. 1, extends downwardly to a point adjacent the mechanism 17 for actuation when a brush is completed. Normally, the pin 100 is withdrawn through manual operation of the lever 103 by the operator of the machine when it is desired to initiate operation of the machine, the pin being retained in its withdrawn position, as above stated, by the locking plunger 109. Upon completion of the brush, the plunger 109 is automatically withdrawn to permit the pin 100 to be moved to its projected position under the influence of the spring 107 so that the clutch will immediately be disengaged and the machine stopped. Preferably, the pin 100 is formed with a slightly reduced portion 111 intermediate the groove 108 and the body of the pin, in order that any burs that may be struck up as a result of the action of the locking plunger 109 on the pin will not become wedged between the pin and the bore 101.

I claim as my invention:

1. In a staple driving mechanism for a brush making machine, a first slide, a second independently supported slide having a wide, shallow channel extending longitudinally thereof, jaws pivotally mounted on said second slide for forming and holding a staple, and a rigid stiffening member interconnecting said slides rigid with said first slide and slidably and guidingly engaging in the channel in said second slide.

2. In a staple driving mechanism for a brush making machine, a first slide, a second independently supported slide, jaws pivotally mounted on said second slide for forming and holding a staple, a rigid stiffening member interconnecting said slides rigid with said first slide and slidably and guidingly engaging said second slide, and a staple driver carried by said interconnecting member.

3. In a staple driving mechanism for a brush making machine, a first slide, a second slide, jaws pivotally mounted on said second slide, a cam follower carried by each of said jaws, a member interconnecting said slides rigidly secured to said first slide and slidably engaging said second slide, and a staple driver and a cam mounted on said interconnecting member.

4. In a staple driving mechanism for a brush making machine, a first slide, a second independently supported, generally flat slide having a longitudinally extending channel formed in the underneath side thereof, and a rigid stiffening member interconnecting said slides rigid at one end with said first slide and having its other end received in the channel in said second slide and having a slidable but close engagement therewith to guide and stiffen the parts.

5. In a staple driving mechanism for a brush making machine, a first slide having a longitudinally extending channel formed in the underneath side thereof, a second slide having a longitudinally extending channel formed in the underneath side thereof and a longitudinally extending slot formed therein, a member interconnecting said slides having one end received in the channel in said first slide and rigidly secured thereto and having its other end slidably received in the channel in said second slide, a block carried by said member and slidably received in the slot in said second slide, and a staple driver mounted on said block to be carried by said interconnecting member.

6. In a staple driving mechanism for a brush making machine, a first slide, a second slide having a longitudinally extending channel formed in the underneath side thereof, a pair of jaws pivotally mounted on said second slide with a portion thereof overlying said slide, an extension of said first slide having its free end slidably received in the channel in said second slide, an elongated slot extending longitudinally of said second slide, a block mounted on said extension and slidably received in said slot, a driver mounted on said block and disposed between said jaws, and a cam for actuating said jaws mounted on said driver and with said driver and block secured to said extension.

7. In a staple driving mechanism for a brush making machine, a first slide, a second slide having a longitudinally extending channel formed in the underneath side thereof, a pair of jaws pivotally mounted on said second slide with a portion thereof overlying said slide, an extension of said first slide having its free end slidably received in the channel in said second slide, an elongated slot extending longitudinally of said second slide, a block mounted on said extension and slidably received in said slot, a driver mounted on said block and disposed between said jaws, and a cam for actuating said jaws mounted on said driver and with said driver and block secured to said extension and said cam overlying portions of said jaws to form with said second slide guide means for said jaws.

8. In a staple driving mechanism for a brush making machine, a first slide, a second slide having a longitudinally extending channel formed in the underneath side thereof, a pair of jaws pivotally mounted on said second slide with a portion thereof overlying said slide, an extension of said first slide having its free end slidably received in the channel in said second slide, an elongated slot extending longitudinally of said second slide, a block mounted on said extension and slidably received in said slot, said block having a thickness just slightly greater than the thickness of said second slide at the slot therein, a driver mounted on said block and disposed between said jaws, and a cam for actuating said jaws mounted on said driver and with said driver and block secured to said extension and said cam overlying portions of said jaws to form with said second slide guide means for said jaws.

9. In a staple driving mechanism for a brush making machine, a first slide having a longitudinally extending channel formed in the underneath side thereof, a second slide having a longitudinally extending channel formed in the underneath side thereof, said channels being wide and shallow, a flat stock bar having its opposite ends received slidably but snugly in the channels of said slides, means for rigidly but adjustably securing said bar to said first slide, an elongated longitudinally extending slot in said second slide, a block mounted on said bar and slidably received in the slot in said second slide, a staple driver mounted on said block, a cam mounted on said staple driver, and means for

securing said cam, driver and block to said bar, said cam being adjustably secured.

10. In a staple driving mechanism for a brush making machine, a first slide, a second, independently supported, generally flat slide having a longitudinally extending channel formed in the underneath side thereof, said channel being comparatively wide and shallow and lying in a plane parallel with the plane of said slide, and a rigid, flat stock member interconnecting said slides rigid at one end with said first slide and having its other end received in the channel in said second slide in a slidable but close engagement therewith to stiffen the mechanism against twisting in the plane of the slides.

11. In a staple driving mechanism for a brush making machine, means having a guideway formed therein, a first slide supported in said guideway for reciprocatory movement, a second slide also supported in said guideway and independently of said first slide, said second slide having a wide, shallow channel extending longitudinally thereof, jaws pivotally mounted on said second slide for forming and holding a staple, and a rigid stiffening member interconnecting said slides rigid with said first slide and slidably and guidingly engaging in the channel in said second slide to hold said slides against binding in the guideway.

12. In a staple driving mechanism for a brush making machine, a first slide, a second slide having a longitudinally extending channel formed in the underneath side thereof, a pair of jaws pivotally mounted on said second slide with a portion thereof overlying said slide, an extension of said first slide having its free end slidably received in the channel in said second slide, an elongated slot extending longitudinally of said second slide, means on said extension slidably projecting into said slot, a driver mounted on said means and disposed between said jaws, and a cam for actuating said jaws mounted on said means and with said driver secured to said extension.

13. In a staple driving mechanism for a brush making machine, means providing a guideway and a cam groove having a main portion parallel with the guideway and a portion diverging from the guideway, a first slide reciprocable in said guideway and having a lateral extension, a second slide reciprocable in said guideway, a crank pivotally mounted on said lateral projection and having a cam follower engaged in said cam groove, a link connection between said crank and said second slide enabling said second slide through said crank to be reciprocated simultaneously with or relative to said first slide, jaws pivotally mounted on said second slide for forming and holding a staple, a rigid, flat stock member rigid at one end with said first slide and slidably and guidingly engaging said second slide to stiffen the mechanism and prevent binding of the slides in the guideway, a cam disposed between said jaws and controlling the pivoting thereof, and a staple driver, said cam and driver being mounted on said interconnecting member to have a movement relative to said second slide.

JOHN I. CARLSON.