(No Model.) 4 Sheets—Sheet 1.

J. V. BOHANNAN.

CIGARETTE MACHINE.

No. 456,644. Patented July 28, 1891.

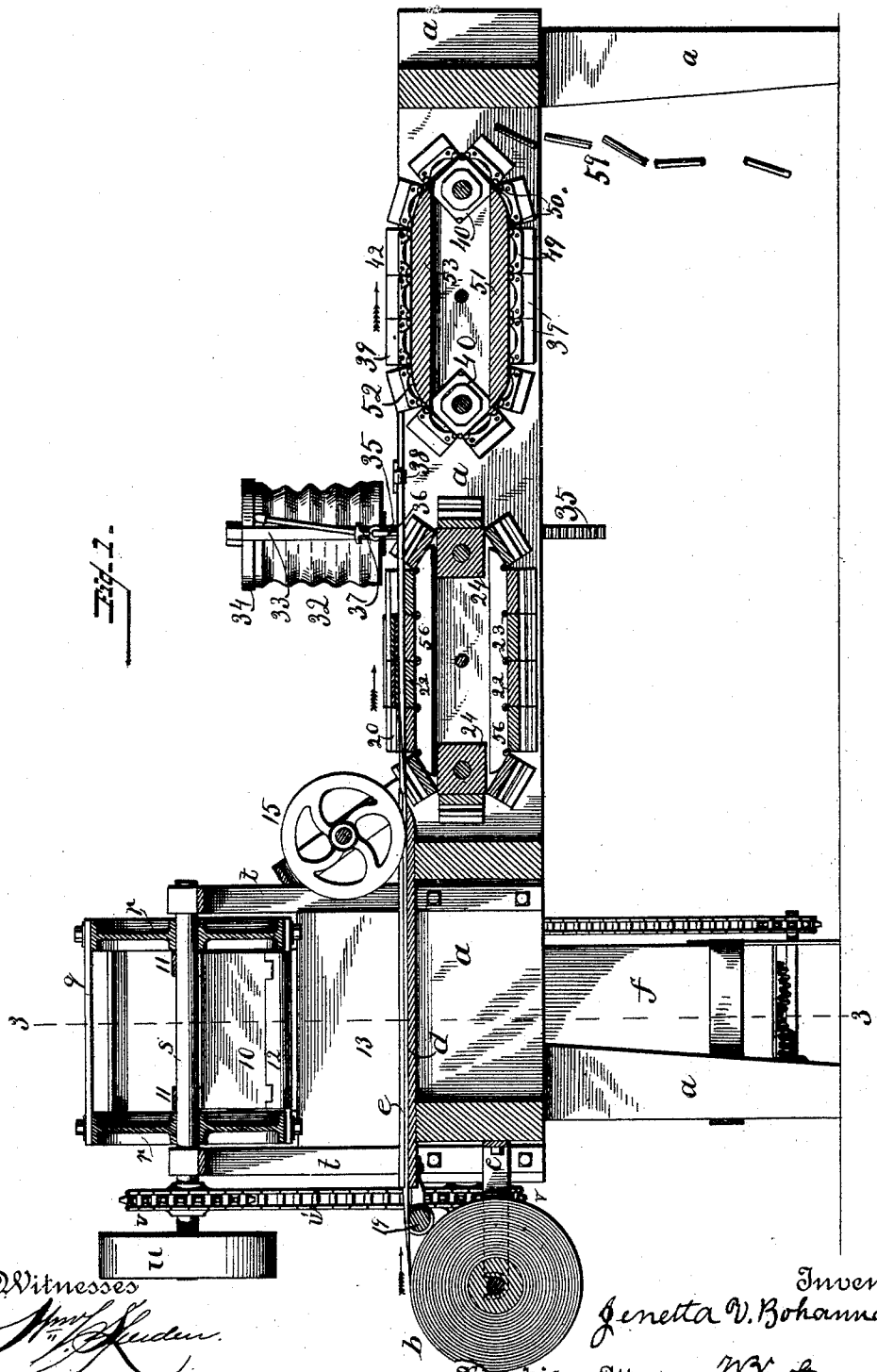

Witnesses

Wm. J. Sueden

P. E. Stevens.

Inventor

Jenetta V. Bohannan.

By his Attorney W. X. Stevens.

THE NORRIS PETERS CO., PHOTO-LITHO., WASHINGTON, D. C.

(No Model.)

4 Sheets—Sheet 2.

J. V. BOHANNAN.

CIGARETTE MACHINE.

No. 456,644. Patented July 28, 1891.

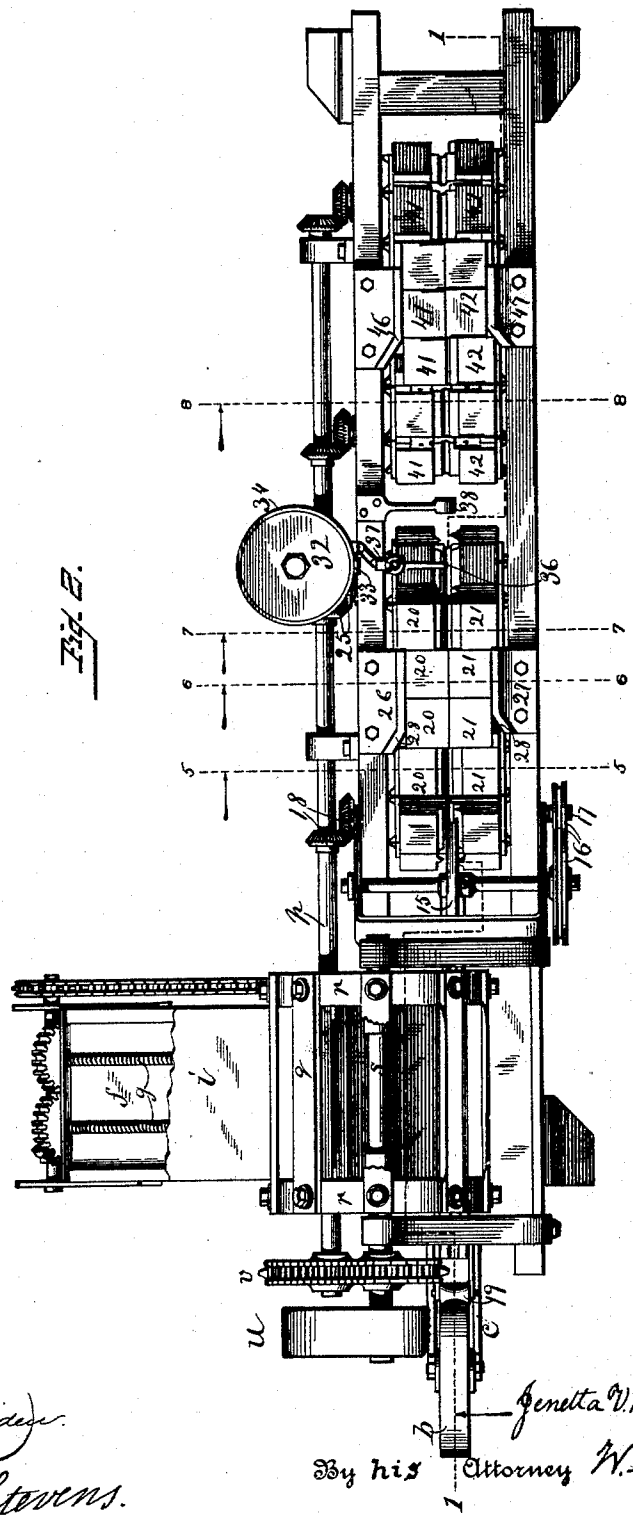

Fig. 2.

Witnesses
Mont L. Speidel.
P. C. Stevens.

Inventor
Jenetta V. Bohannan.
By his Attorney W. C. Stevens

THE NORRIS PETERS CO., PHOTO-LITHO., WASHINGTON, D. C.

No Model.)

4 Sheets—Sheet 3.

J. V. BOHANNAN.

CIGARETTE MACHINE.

No. 456,644.

Patented July 28, 1891.

Fig. 3.

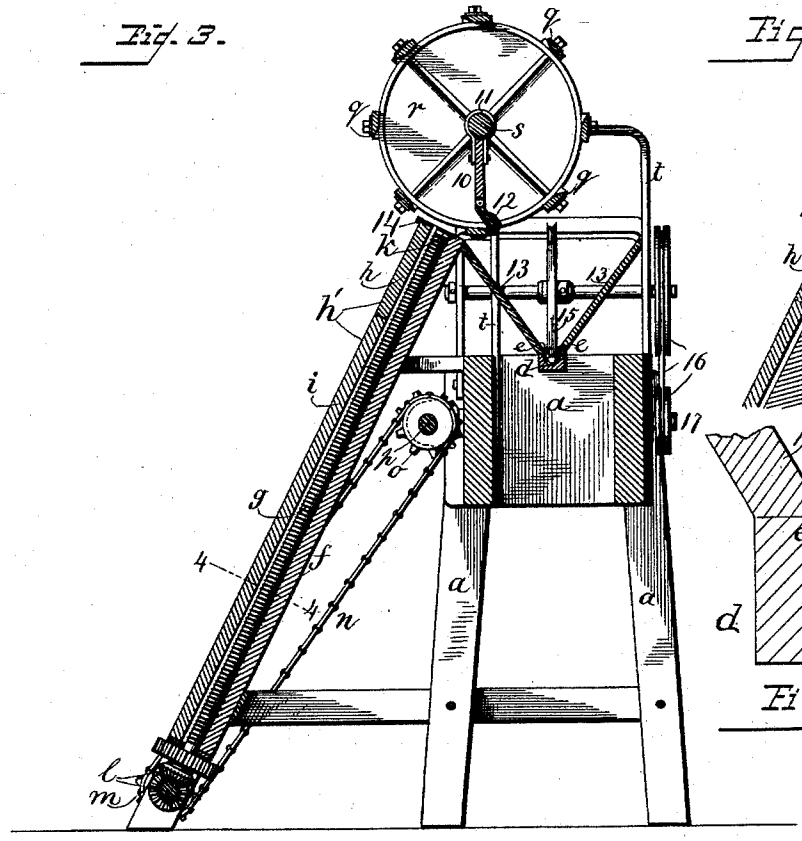

Fig 10.

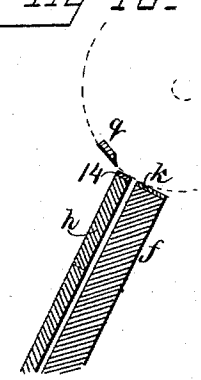

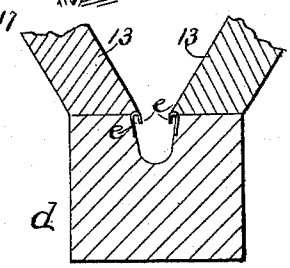

Fig 11.

Fig. 4.

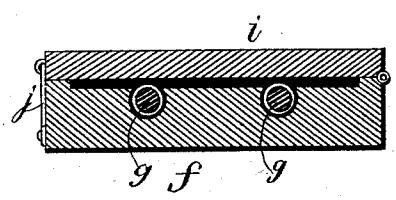

Witnesses

Wm. C. Sheiden

P. E. Stevens.

Inventor

Jenetta V. Bohannan.

By his Attorney W. X. Stevens.

THE NORRIS PETERS CO., PHOTO-LITHO., WASHINGTON, D. C.

(No Model.) 4 Sheets—Sheet 4.

J. V. BOHANNAN.

CIGARETTE MACHINE.

No. 456,644. Patented July 28, 1891.

Fig. 5.

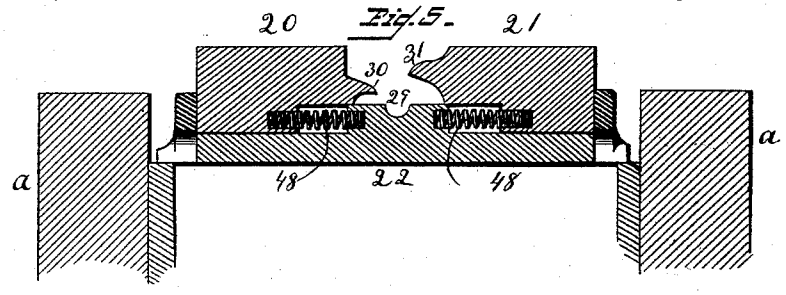

Fig. 6.

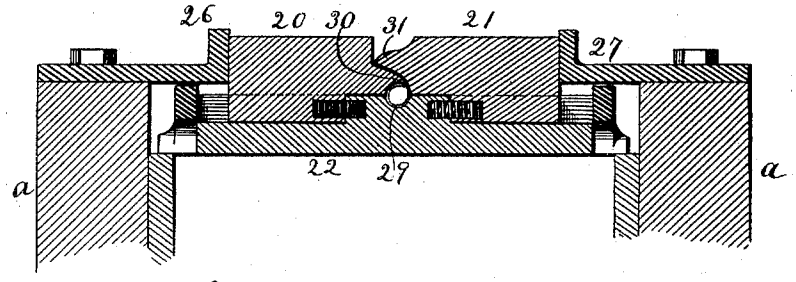

Fig. 7.

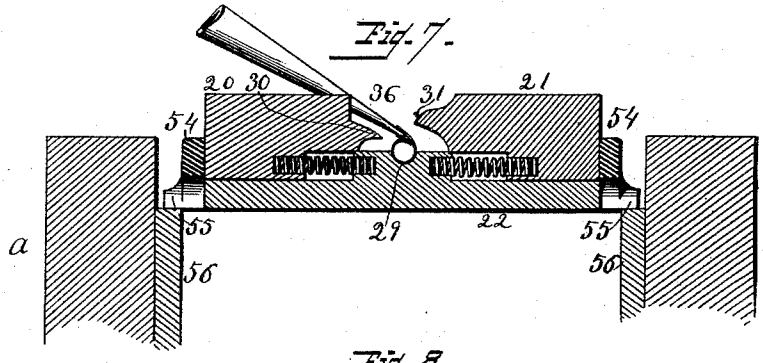

Fig. 8.

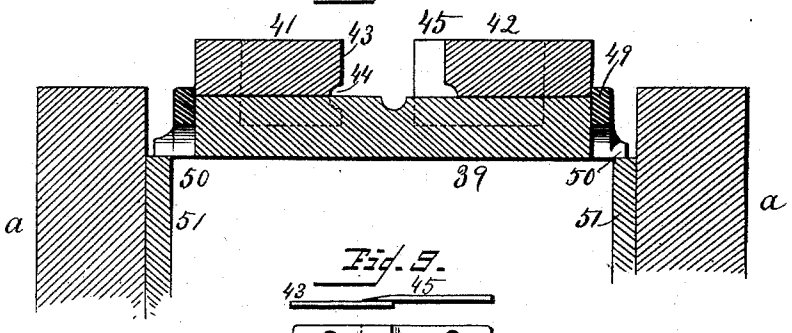

Fig. 9.

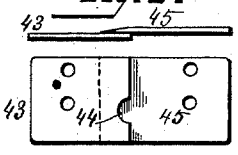

Witnesses
Wm. F. Sheridan.
P. C. Stevens.

Inventor
Jenetta V. Bohannan.
By his Attorney W. C. Stevens.

THE NORRIS PETERS CO., PHOTO-LITHO., WASHINGTON, D. C.

UNITED STATES PATENT OFFICE.

JENETTA V. BOHANNAN, OF WASHINGTON, DISTRICT OF COLUMBIA.

CIGARETTE-MACHINE.

SPECIFICATION forming part of Letters Patent No. 456,644, dated July 28, 1891.

Application filed July 10, 1890. Serial No. 358,250. (No model.)

To all whom it may concern:

Be it known that I, JENETTA V. BOHANNAN, a citizen of the United States, residing at Washington, in the District of Columbia, have invented certain new and useful Improvements in Cigarette-Machines; and I do hereby declare the following to be a full, clear, and exact description of the invention, such as will enable others skilled in the art to which it appertains to make and use the same.

This invention relates to machines for making cigarettes; and its object is to feed into the machine the tobacco which is the filling of the cigarettes, the paper which is their covering or outside, and the paste which unites the same, and to perform the various offices necessary to form cigarettes of these materials automatically.

To this end my invention consists in the construction and combination of parts forming a cigarette-machine hereinafter described and claimed, reference being had to the accompanying drawings, in which—

Figure 1 is a longitudinal vertical section of a cigarette-machine according to my invention, taken on the irregular line 1 of Fig. 2, which is a plan view thereof. Fig. 3 is a transverse vertical section on line 3 of Fig. 1, and Fig. 4 is a cross-section of the feeding-box at line 4. Figs. 5, 6, 7, and 8 are transverse vertical sections through the truck appurtenances at the lines, respectively, 5, 6, 7, and 8 of Fig. 2; and Fig. 9 shows the shearing-off blades, both as seen at the top edge and at their inner or rear face. Fig. 10 is a detail view of the delivery end of the feeding-box. Fig. 11 is an enlarged detail view of trough *d* in cross-section.

a represents the body or frame of the machine.

b is a roll of paper of the proper width to wrap around a cigarette and have its edges overlap enough to be firmly united by paste. This roll is journaled upon brackets *c*, fixed to the rear end of the frame, and the paper is drawn therefrom through a stationary trough *d*, having inward-projecting lips *e*, under which the edges of the paper are guided.

f is the tobacco-feeding box, of a width to receive a wide plug or layer of tobacco and only deep enough to admit the thickness of one plug.

g g represent screws located in grooves longitudinally in the bottom of the feed-box, the height of the screw-thread projecting above the inner face of the said bottom. The lid *h'* of this box is in two sections *h i*, hinged at one edge to the box and provided with hooks *j* at the other edge, whereby they may be pressed down upon the tobacco to hold it in engagement with the threads of the screws *g*. The delivery end of the box is provided with a fixed shear-blade *k*, over which the tobacco is continually fed by the screws *g*, which are kept in motion by the beveled gears *l*, sprocket-wheel *m*, chain *n*, and the sprocket-wheel *o*, which is on the machine-shaft *p*.

q represents a series of blades or cutters rigidly secured on the two cutter-heads *r*, which are fixed upon a shaft *s*, that is journaled in bearings in posts *t*, fixed to the frame *a*.

u represents a pulley on shaft *s*, whereby power may be received to run the machine, and *v* represents sprocket-wheels, and *v'* a chain communicating motion from the cutter-shaft *s* to the machine-shaft *p*. The blades *q* in revolving come in shearing contact with the fixed blade *k*, thus shearing off the tobacco in fine long shavings as fast as it is fed in by the screws *g*. The shavings fall from the inner faces of the blades within the cylinder as they revolve, and I provide a heavy curtain 10, hung by bearings 11 freely upon the shaft *s*, and a wiper 12, hinged to the lower edge of the curtain to wipe the tobacco shavings from each passing blade and permit the shavings to drop between the blades into a hopper 13, which guides them into the covering-paper in the trough *d*. The curtain 10 prevents the shavings from being thrown around by the blades, and the wiper 12, being hinged to the lower edge of the curtain and weighted on its back, is enabled to drag upon the backs of the blades and wipe the shavings of tobacco off to fall between them. The wiper, when at its lower limit, does not quite reach the sharp edge of each blade, but strikes a little back of it, and a spring may be added to quicken the fall of the wiper, if found necessary. The lid *h'* is in two sections *h* and *i*, in order that tobacco may be supplied without stopping the machine by permitting the section *h* to remain closed upon the remaining tobacco, while the section *i* is raised to

add the new supply, and pains should be taken to crowd it firmly against that already in, so that there be no interval in which the blades are not supplied.

14 is a metallic jaw rigidly fixed at the delivery end of the lid-section *h* to enable it and the blade *k* to hold the last ends of plugs, as in a vise, while being sheared off. The action of the screws *g* is so strong and positive that they will forward the tobacco against great resistance of the pressing lid-sections *h i*.

15 is a wheel having a half-round groove in its edge and of a width to enter the paper wrapper while held in U shape and compress the tobacco shavings therein to the size and form suitable for cigarettes while the same is continuously drawn along beneath the said wheel. The wheel is kept revolving at the same speed that the paper and filling advance by means of pulleys and belt 16, which receive motion through a cross-shaft 17 and beveled gears 18 from the machine-shaft *p*.

19 is a roller for supporting the paper *b* in line to enter the trough *d* when the roll of paper becomes reduced in size.

20 21 represent the closing jaws gibbed to slide transversely in truck 22, which are connected together in a continuous chain by means of hinges 23.

24 represents a pair of pulleys journaled in the frame upon shafts connected by beveled gears 18 and 25 with the machine-shaft *p* and kept continually rotating thereby. These pulleys are many-sided. I here show them with four sides, each side corresponding to the length of a truck, and the continuous chain of trucks is rotated by the pulleys.

26 27 represent the jaw-closers rigidly fixed to the frame in the path of the outer edges of the jaws, and they have flaring inner edges at their rear ends 28 to guide the advancing jaws inward. These trucks are all provided with half-round troughs 29 to register with each other in line with the trough *d* to receive the filled wrapper after it passes the compressing-wheel 15. The jaw 20 has a sharp-edged lip 30, beneath which is a quarter-round groove to register when closed with the trough 29, and the jaw 21 has an overhanging lip 31, fitted to pass over and register with the lip 30 in loose contact, and beneath the lip 31 is also a quarter-round groove registering when closed with the trough 29, the two jaws and the said trough completing the circle or cylinder to surround and compress the wrapper and filling into circular or cigarette form. (See Fig. 6.) The closer 27 stands a little forward of the closer 26, so that the jaws 20 in advancing meet the closer 26 before the jaws 21 meet their closer 27, and each jaw 20, advancing its lip 30, closes one edge of the wrapper upon the filling. Then immediately afterward each jaw 21 advances its lip 31 and closes the remaining edge of the wrapper over the lip 30, as shown in Fig. 6.

32 represents a paste-reservoir, preferably made with flexible sides like a bellows, supported upon the frame by a post 33 and ring 34. The lower end of the reservoir is piston-like, provided with a rack toothed piston-rod 35, which communicates with the machine-shaft *p* by suitable gearing to continually press the piston up, so as to force out the paste from a nozzle 36 as fast as required.

37 is a stop-cock or throttle-valve in the pipe connecting the nozzle with the reservoir, whereby the rate of delivery of the paste may be governed. The nozzle 36, Fig. 7, is fixed in line of the closed lips 30, Fig. 6, so that the closed edges of the paper wrapper rub it above and below in passing, and the nozzle is provided with a suitable outlet and spreader at its lower side to deliver and spread the paste.

38 is a closing-ring supported on an arm fixed to the frame and located in the line of the trough 29, and the filled and pasted wrapper is drawn through this ring, whereby the pasted edges are closed and firmly pressed together, and the whole is thus rounded into the form of a continuous cigarette.

39 represents a second chain of grooved trucks similar in their connections, mounting, and movement to the trucks 22.

40 represents square pulleys, which carry the trucks 39, similarly geared to the machine-shaft *p* to run at the same speed as the trucks 22. The office of these trucks is to pull the continuous cigarette forward over the pasting-nozzle and through the closing-ring and to cut off the rod into lengths for single cigarettes by means of gripping-jaws 41 42, gibbed to slide transversely upon the trucks 39. Each jaw is provided with a quarter-round groove to register when closed with the trough in the truck, forming therewith a cylinder of a size to grip the cigarette rod. The jaw 41 is provided with a sharp-corner-edged shear-blade 43, having a half-round notch 44 to receive and support one side of the continuous cigarette, while a sharp-edged blade 45, projecting from the opposite jaw 42, is driven past it in shearing contact, as shown in Fig. 9, to cut off the cigarette.

46 and 47 are closers, respectively, for the jaws 41 and 42, and the closer 47 is farther in advance than the closer 46, so that the jaw 41, with its blade 43, is closed against one side of the continuous cigarette before the jaw 42 begins to close, in order that the continuous cigarette may be firmly supported when the blade 45 enters it. The blades are at the forward ends of the trucks, in order that the jaws may continue to pull forward that portion of the continuous cigarette in their rear after the cutting, and the closers keep the two jaws ahead of the cut firmly closed to support the cigarette while being cut off, thus insuring a square cut. When the jaws 20 21 pass their closers, they are suddenly forced open by springs 48, leaving the continuous cigarette to be pulled along by the jaws 41 42, and when the latter pass their closers they are sprung open by similar springs, (not

shown,) delivering the completed cigarettes 59 in rapid succession. The trucks 39 are provided with rigidly-fixed shoes 49, each shoe having two knobs or rollers 50 adapted to slide or roll on the side rails 51, which are fixed to the frame *a* in planes above and below the pulleys 40, the ends of the rails being rounded to even the path of the trucks, and each truck has the two knobs or rollers 50, one at each end, in order that its ends may not be raised above the path of the proper travel when the middle passes over the curve 52, as it would be raised if there were a straight line of bearing along the middle as well as at the ends. The trucks 22 are similarly mounted to slide on rails by means of shoes 54, having end knob-bearings 55. The shavings of tobacco by falling continually from the rotary blades into the wrapper overlap in length, so that the continuous cigarette is equally strong at all points before it is cut into cigarette lengths.

What I believe to be new, and desire to secure by Letters Patent, is the following:

1. The combination, in cigarette-machines, of a tobacco-feeding box, one or more screws located longitudinally in the bottom thereof, with the screw-thread projecting above the bottom, means for revolving the said screws, means for keeping tobacco in contact therewith, and means for cutting the tobacco at the delivery end of the box, substantially as described.

2. The combination of a tobacco-feeding box, one or more screws located in and along its bottom, with the screw-thread thereof projecting within the box, a lid hinged to one edge of the box and removably secured upon the other edge at a distance above the bottom and adapted to press tobacco in the box into engagement with the said screw-threads, and means for revolving the screws and cutting the tobacco across the delivery end of the box, substantially as described.

3. The combination of a tobacco-feeding box, one or more screws located in and along its bottom, with the screw-thread projecting within the box, a lid made in two sections secured to the box independently of each other, and means for revolving the screws and for cutting tobacco at the delivery end of the box, substantially as described.

4. The combination of a tobacco-feeding box having a shear-blade fixed at its delivery end, one or more blades adapted to coact therewith as shears, a lid comprising two portions *h* and *i* for the box, the portion *i* provided with a metallic jaw opposed to the said fixed blade, like the jaws of a vise, and means for forcing tobacco forward between the said vise blade and jaw into the shears, substantially as shown and described.

5. The combination of a tobacco-feeding box having a shear-blade fixed at its delivery end, a series of blades fixed upon two cutter-heads, which are journaled to revolve the said blades into shearing contact with the said fixed blade, a curtain hung by journal-bearings upon the shaft of the cutter-heads, and a wiper hinged to the curtain and adapted to drag upon the inner faces of the revolving blades, substantially as described.

6. The combination of a tobacco-feeding box having a shear-blade fixed at its delivery end, a series of blades fixed upon two cutter-heads, which are journaled to revolve the said blades into shearing contact with the said fixed blade, means for wiping the shavings of tobacco from the inner faces of the blades, a hopper having one side close to the delivery end of the tobacco-feeding box, and a fixed trough provided with lipped edges beneath the delivery end of the hopper to guide the paper in trough form under the said delivery end of the hopper, substantially as described.

7. The combination of a guide-trough for a cigarette-wrapping paper, means for providing tobacco filling for the wrapping-paper, means located above the trough for compressing the filling in the wrapping-paper, a series of trucks hinged together in a continuous chain and grooved to register with each other in line of the said trough, and jaws fitted to slide transversely upon the trucks and having overlapping edges fitted to close the edges of the wrapping-paper one over the other around the filling while in motion, substantially as described.

8. The combination of the trucks 22, hinged together in a continuous chain, pulleys 24, carrying the trucks, rails 56, supporting the trucks, the jaws 20 and 21, gibbed to slide transversely in the trucks, the closers 26 and 27, rigidly fixed to the frame in the path of the outer edges of the jaws and having their inner edges slanted at their rear ends 28, and means for furnishing cigarette-wrapping paper and filling to be closed by said jaws, substantially as described.

9. The combination of the trucks 22, hinged together in a continuous chain, means for causing the said chain to travel and means for supporting a portion of it in line, the jaws 20 and 21, fitted to slide transversely upon the trucks and provided with wrapper-closing edges, the jaw-closers 26 27, rigidly fixed one somewhat ahead of the other in line of the outer edges of the jaws, and means for feeding the paper wrapper forward and compressing the tobacco therein, substantially as described, whereby one edge of the wrapper will first be closed upon the filling and then the other edge of the wrapper will be closed over the first edge.

10. The combination of two endless chains of grooved trucks arranged one in advance of the other, grooved jaws fitted to slide transversely thereon in line with each other and adapted to close upon and to carry a continuous cigarette, the jaws upon the first series of trucks having upon their faces means for turning inward the edges of the wrapper, means for causing the two chains to travel at the same speed and in the same line, and a

paste-supplying nozzle in line of the closure of the said continuous cigarette, and a closing-ring adapted to close and round the continuous cigarette, both the nozzle and ring being located between the said two chains of trucks and in line of the grooves therein, substantially as described.

11. The combination of means for forming a continuous cigarette and delivering the same continuously, the grooved trucks 39, adapted to travel continuously with certain of their number in line of the said delivering means, the jaws 41 and 42, fitted to slide transversely on the trucks and provided, respectively, with shear-blades 43 and 45, and the jaw-closers 46 47, located one ahead of the other in the path of the outer edges of the jaws, substantially as described, whereby the jaw 41, having the half-round notched blade 43, will be brought against the cigarette-rod as a backing and afterward the sharp-edged blade 45 will be driven in shearing contact with said notched blade to shear off cigarettes from the rod.

In testimony whereof I affix my signature in presence of two witnesses.

JENETTA V. BOHANNAN.

Witnesses:

C. R. PERRY,

E. J. CUSHING.