US012216060B2

(12) **United States Patent**
Burg et al.

(10) **Patent No.: US 12,216,060 B2**
(45) **Date of Patent: *Feb. 4, 2025**

(54) **QUANTIFYING COLOR CHANGES IN CHEMICAL TEST PADS INDUCED BY DIFFERENT CONCENTRATIONS OF ANALYTES UNDER DIFFERENT LIGHTING CONDITIONS**

(71) Applicant: **HEALTHY.IO LTD.**, Tel Aviv-Jaffa (IL)

(72) Inventors: **Bernard Burg**, Menlo Park, CA (US); **Martin Zizi**, Enines (BE); **Aaron Alexander Rowe**, San Francisco, CA (US); **Anthony Smart**, Costa Mesa, CA (US); **Walter De Brouwer**, Los Altos, CA (US)

(73) Assignee: **HEALTHY.IO LTD.**, Tel Aviv-Jaffa (IL)

(*) Notice: Subject to any disclaimer, the term of this patent is extended or adjusted under 35 U.S.C. 154(b) by 0 days.

This patent is subject to a terminal disclaimer.

(21) Appl. No.: **18/370,669**

(22) Filed: **Sep. 20, 2023**

(65) **Prior Publication Data**

US 2024/0011912 A1 Jan. 11, 2024

Related U.S. Application Data

(63) Continuation of application No. 17/467,863, filed on Sep. 7, 2021, now Pat. No. 11,802,839, which is a (Continued)

(51) **Int. Cl.**
G01N 21/78 (2006.01)
G01N 21/77 (2006.01)
(Continued)

(52) **U.S. Cl.**
CPC ***G01N 21/78*** (2013.01); ***G01N 21/79*** (2013.01); *G01N 2021/7759* (2013.01);
(Continued)

(58) **Field of Classification Search**
CPC ... G01N 2021/7759; G01N 2021/1765; G01N 2021/8488; G01N 21/77; G01N 21/78;
(Continued)

(56) **References Cited**

U.S. PATENT DOCUMENTS

5,408,535 A 4/1995 Howard, III et al.
6,285,454 B1 9/2001 Douglas et al.
(Continued)

FOREIGN PATENT DOCUMENTS

DE 102010011838 A1 9/2011
EP 2646809 B1 8/2018
(Continued)

Primary Examiner — Maureen Wallenhorst
(74) *Attorney, Agent, or Firm* — Finnegan, Henderson, Farabow, Garrett & Dunner, LLP

(57) **ABSTRACT**

Color quantification of chemical test pads and titration of analytes can be performed under different lighting conditions. In one embodiment, the lighting condition is estimated under which a digital image is captured and utilized to select a set of reference colors from which the quantified color is compared to determine the titration. In another embodiment, a plurality of comparisons are made with different lighting conditions with the result having the highest confidence level being selected to determine the titration.

17 Claims, 28 Drawing Sheets

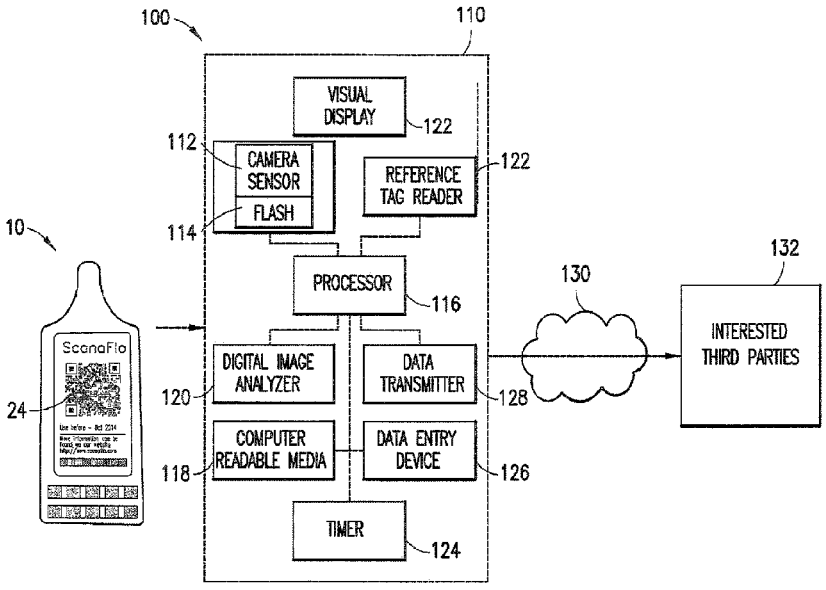

Related U.S. Application Data

continuation of application No. 16/297,630, filed on Mar. 9, 2019, now Pat. No. 11,131,633, which is a continuation of application No. 15/055,643, filed on Feb. 29, 2016, now Pat. No. 10,267,743, which is a continuation of application No. 14/633,513, filed on Feb. 27, 2015, now Pat. No. 9,285,323, which is a continuation-in-part of application No. 14/419,939, filed as application No. PCT/US2013/035397 on Apr. 5, 2013, now Pat. No. 9,311,520.

(60) Provisional application No. 61/948,356, filed on Mar. 5, 2014, provisional application No. 61/680,842, filed on Aug. 8, 2012.

(51) **Int. Cl.**
G01N 21/79 (2006.01)
G01N 33/48 (2006.01)

(52) **U.S. Cl.**
CPC *G01N 33/48* (2013.01); *G01N 2201/0221* (2013.01); *G01N 2201/12* (2013.01)

(58) **Field of Classification Search**
CPC G01N 21/79; G01N 21/27; G01N 21/274; G01N 21/8483; G01N 2201/0221; G01N 2201/12; G01N 33/48; G01N 33/49; G01N 33/493; G01N 2035/00108; G01N 35/00029; G01J 3/46; G01J 3/50; G01J 3/02; G01J 3/524; G01J 3/51
USPC 436/63, 164, 169, 172; 422/400–403, 422/420, 82.05, 82.08; 435/29, 288.7; 356/402
See application file for complete search history.

(56) **References Cited**

U.S. PATENT DOCUMENTS

9,285,323	B2	3/2016	Burg	
9,307,380	B1	4/2016	Burg	
9,311,520	B2	4/2016	Burg	
9,528,941	B2	12/2016	Burg	
9,607,380	B2	3/2017	Burg	
9,863,811	B2	1/2018	Burg	
9,903,857	B2	2/2018	Polwart et al.	
10,267,743	B2	4/2019	Burg	
11,131,633	B2 *	9/2021	Burg	G01N 21/78
11,802,839	B2 *	10/2023	Burg	G01N 21/78
2002/0086435	A1	7/2002	Fernandez	
2005/0157304	A1	7/2005	Xiao et al.	
2006/0292040	A1	12/2006	Wickstead et al.	
2010/0254581	A1	10/2010	Neeser	
2012/0063652	A1	3/2012	Chen	
2012/0106811	A1	5/2012	Chen et al.	
2012/0178101	A1	7/2012	Bae et al.	
2012/0282154	A1	11/2012	Slowly et al.	
2014/0242612	A1	8/2014	Wang et al.	

FOREIGN PATENT DOCUMENTS

EP	3470825	A1	4/2019
KR	1020100008840	A	1/2010
KR	1020110024747	A	3/2011
WO	WO 2007/079843	A2	7/2007

* cited by examiner

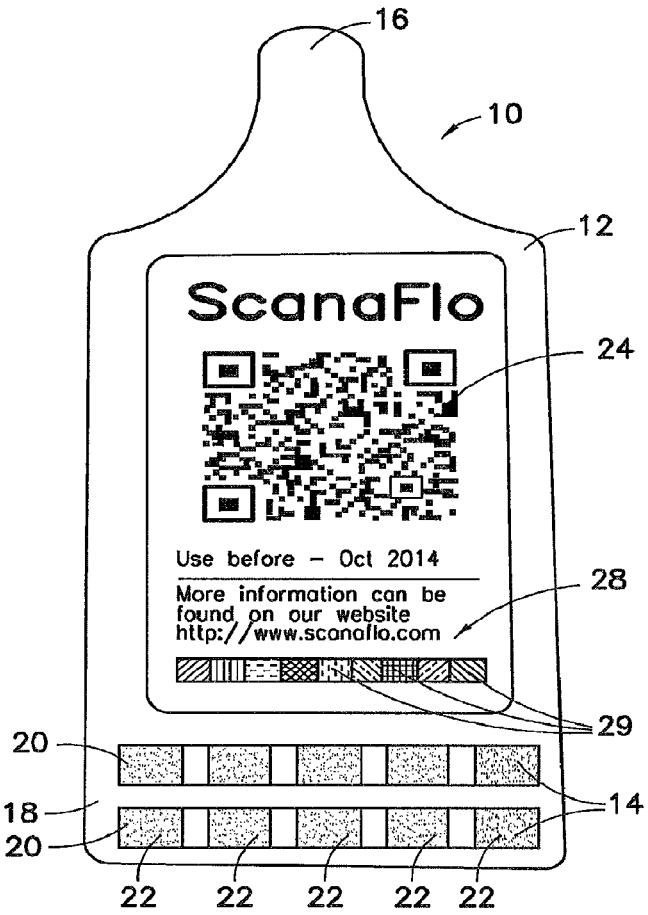
16
10
12
ScanaFlo
24
Use before – Oct 2014
More information can be found on our website http://www.scanaflo.com
28
29
20
18
20
14
22
22
22
22
22

FIG. 1

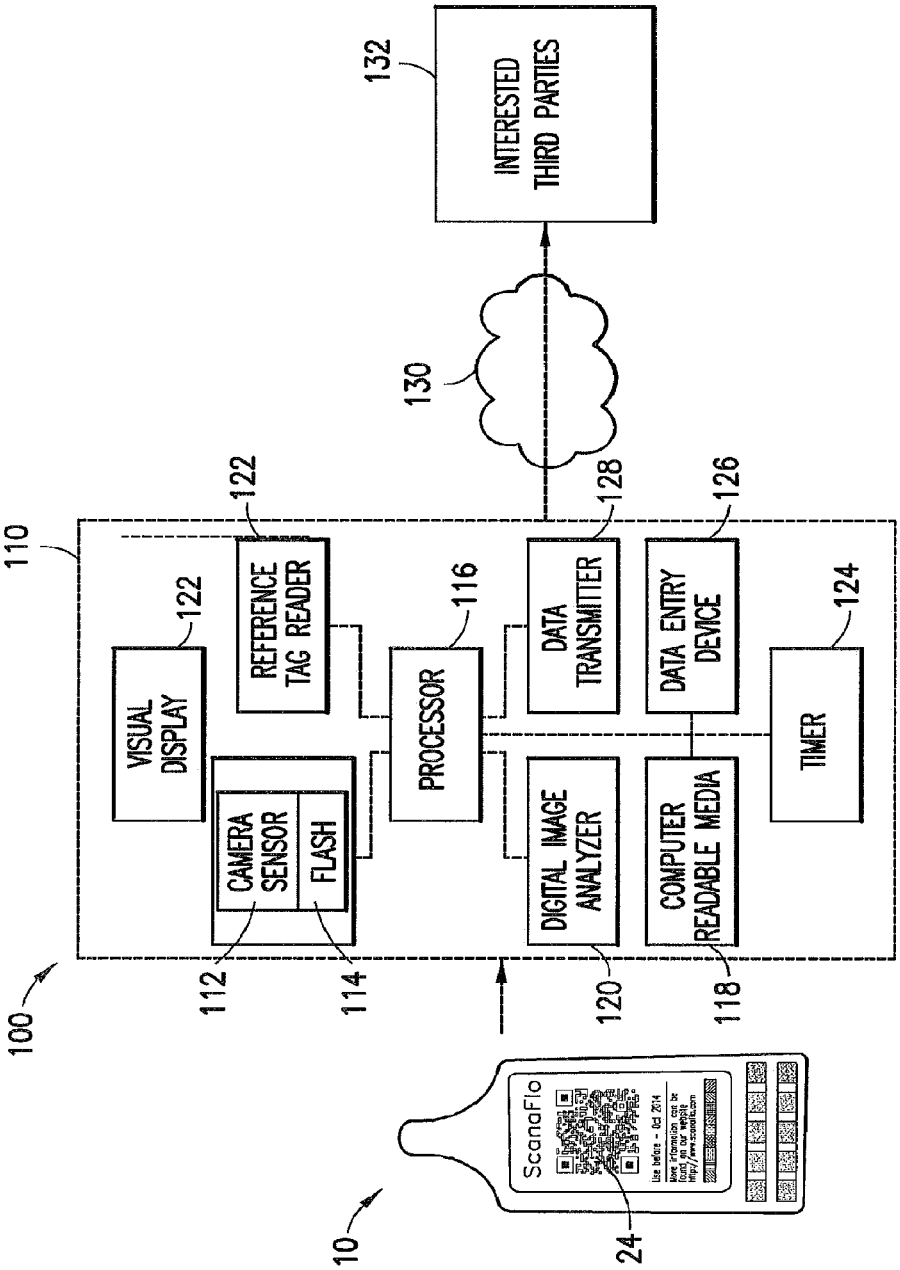
INTERESTED THIRD PARTIES
132
130
122
128
126
110
VISUAL DISPLAY
122
REFERENCE TAG READER
PROCESSOR
116
DATA TRANSMITTER
DATA ENTRY DEVICE
TIMER
124
CAMERA SENSOR
FLASH
DIGITAL IMAGE ANALYZER
COMPUTER READABLE MEDIA
112
114
120
118
100
10
24
ScanaFlo

FIG.2

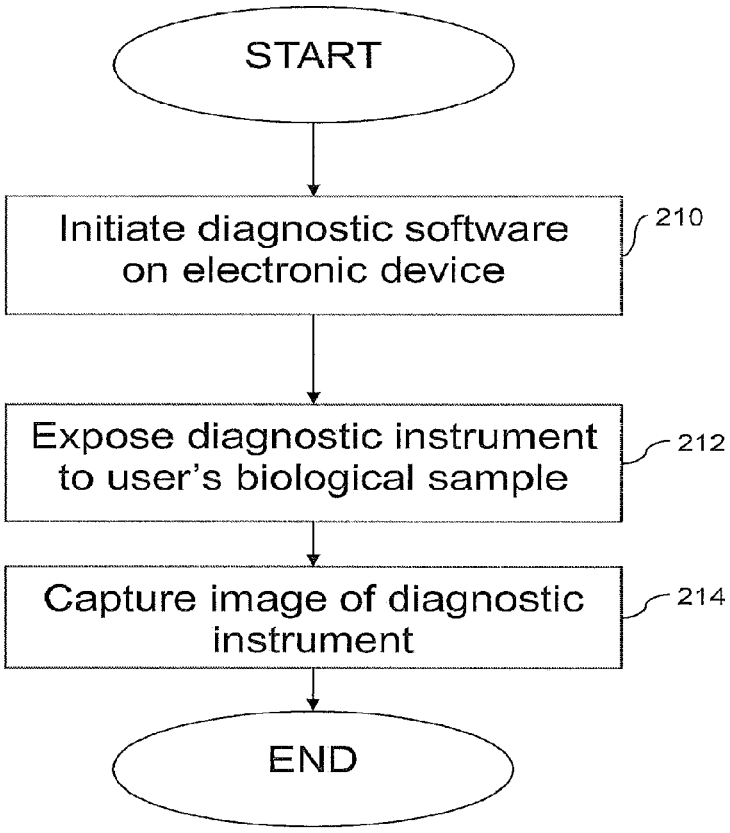
START
Initiate diagnostic software on electronic device
210
Expose diagnostic instrument to user's biological sample
212
Capture image of diagnostic instrument
214
END

FIG. 3

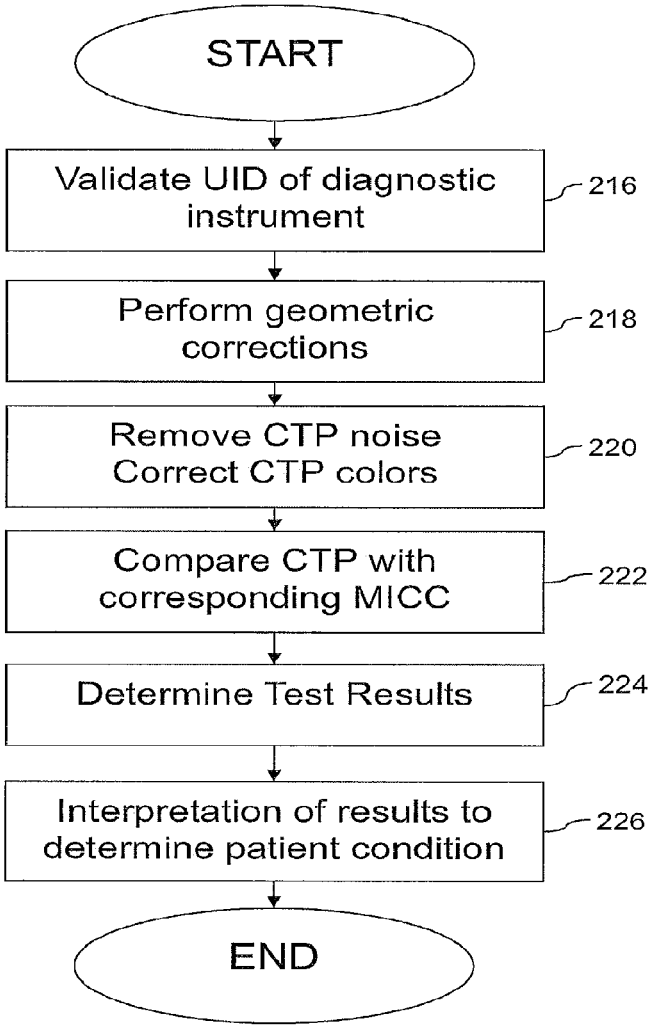
START
Validate UID of diagnostic instrument
216
Perform geometric corrections
218
Remove CTP noise
Correct CTP colors
220
Compare CTP with corresponding MICC
222
Determine Test Results
224
Interpretation of results to determine patient condition
226
END

FIG. 4

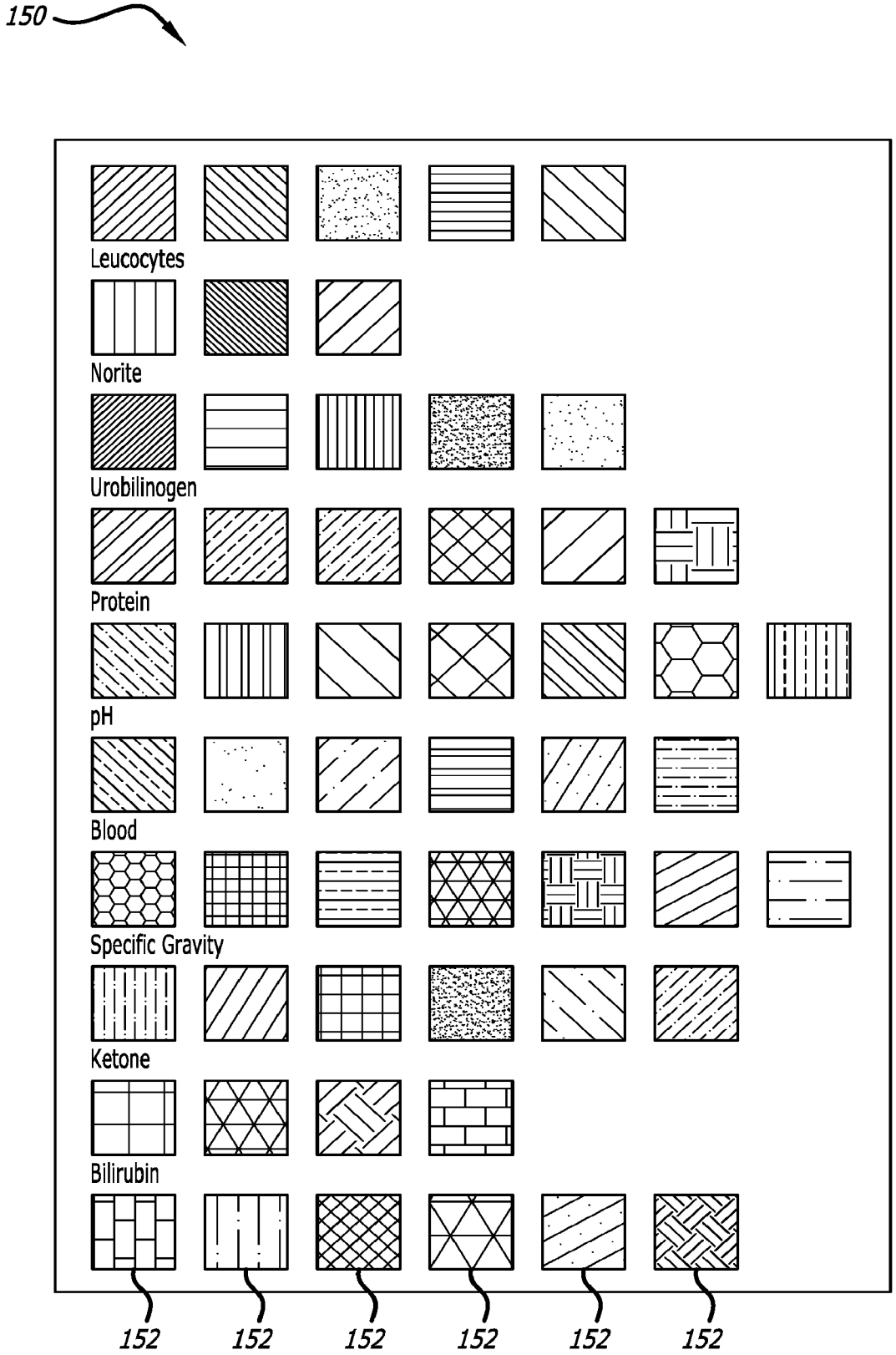

FIG. 5
(Prior Art)

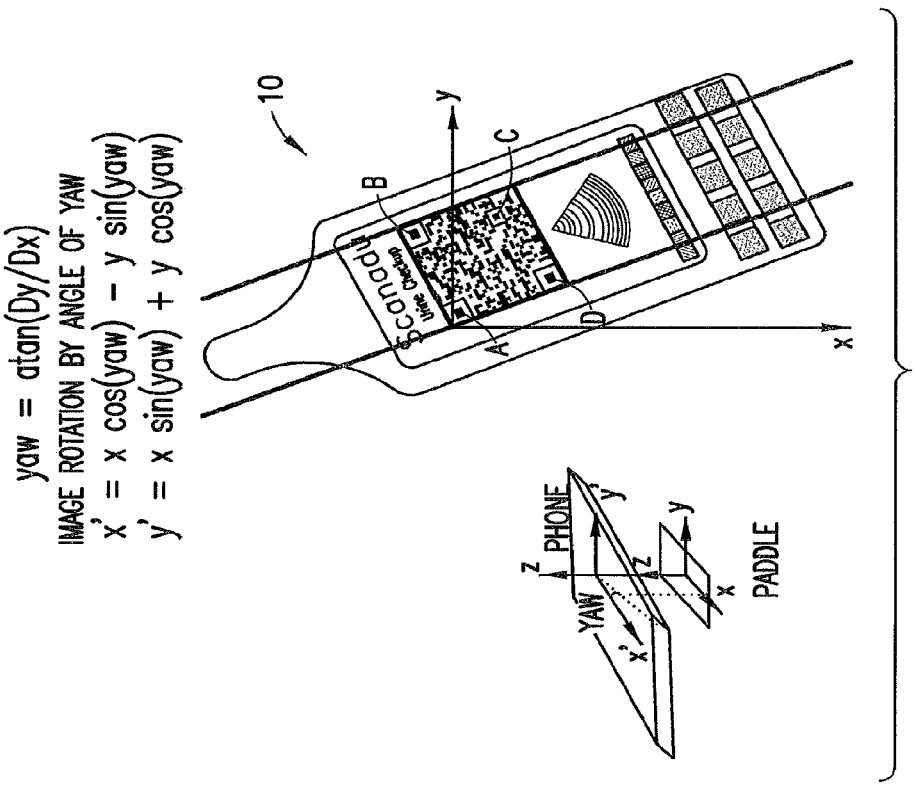
yaw = atan(Dy/Dx)
IMAGE ROTATION BY ANGLE OF YAW
x' = x cos(yaw) − y sin(yaw)
y' = x sin(yaw) + y cos(yaw)
10
y
x
A
B
C
D
PHONE
PADDLE
YAW
z
x'
y'

FIG.6B

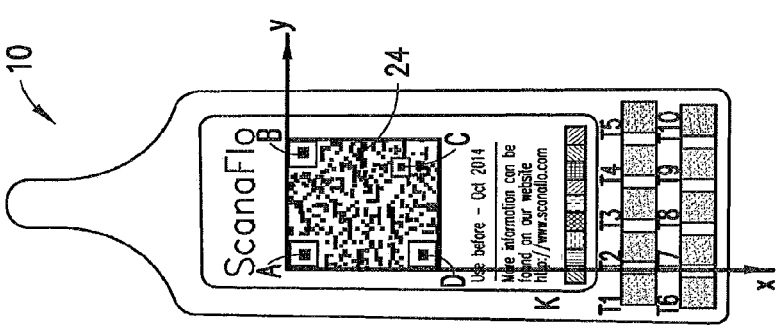
10
y
x
24
A
B
C
D
K
T1
T2
T3
T4
T5
T6
T7
T8
T9
T10
Use before - Oct 2014
More information can be found on our website http://www.scanaflo.com

FIG.6A

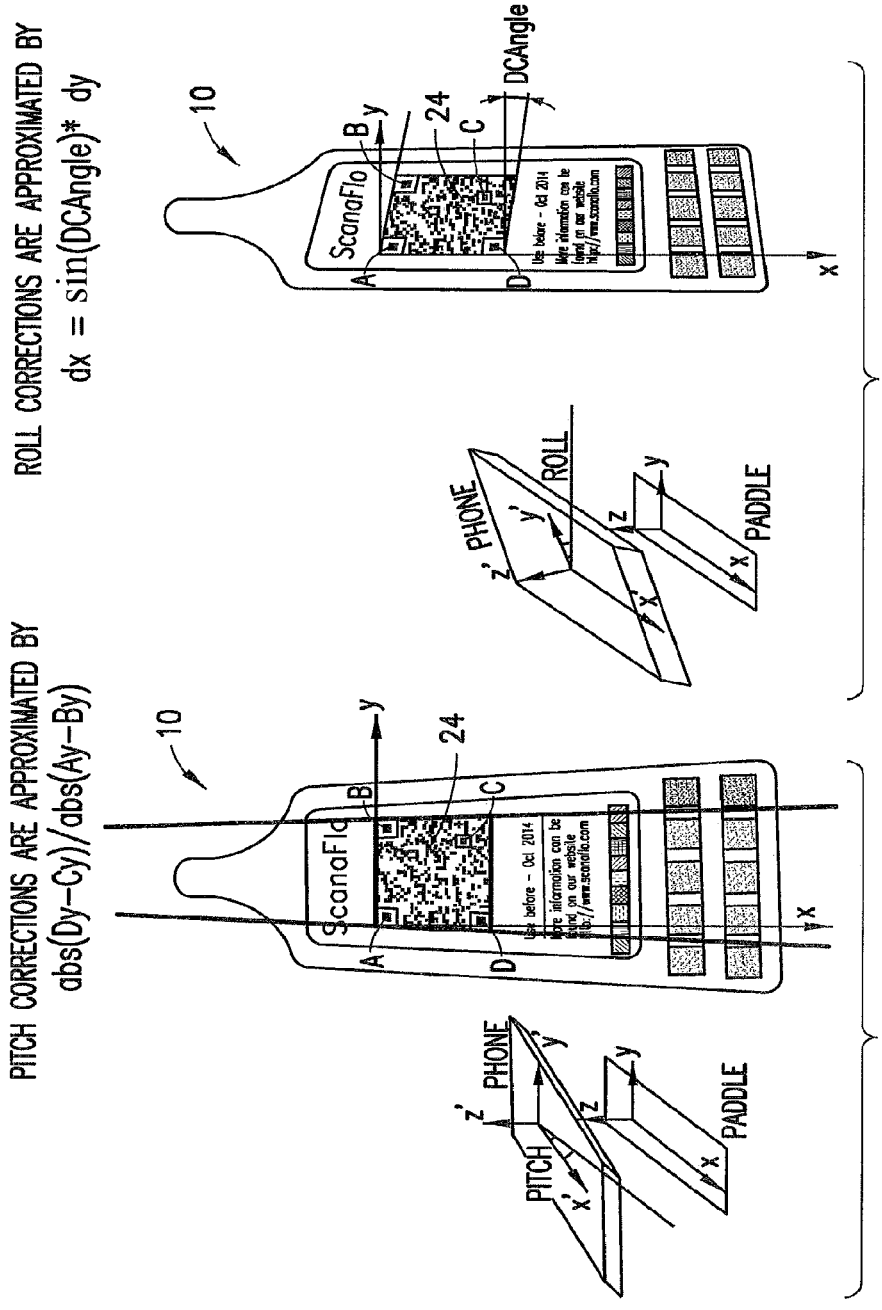
PITCH CORRECTIONS ARE APPROXIMATED BY
abs(Dy−Cy)/abs(Ay−By)
ROLL CORRECTIONS ARE APPROXIMATED BY
dx = sin(DCAngle)* dy
10
ScanaFlo
A
B
C
D
24
DCAngle
PHONE
PADDLE
PITCH
ROLL
x
y
z
x'
y'
z'

FIG.6C FIG.6D

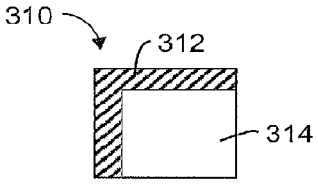

FIG. 7A

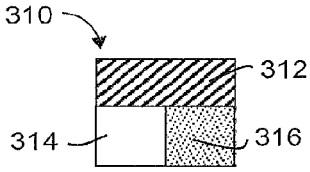

FIG. 7B

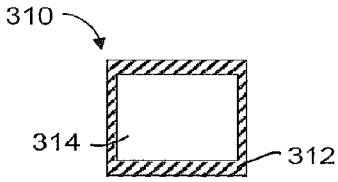

FIG. 7C

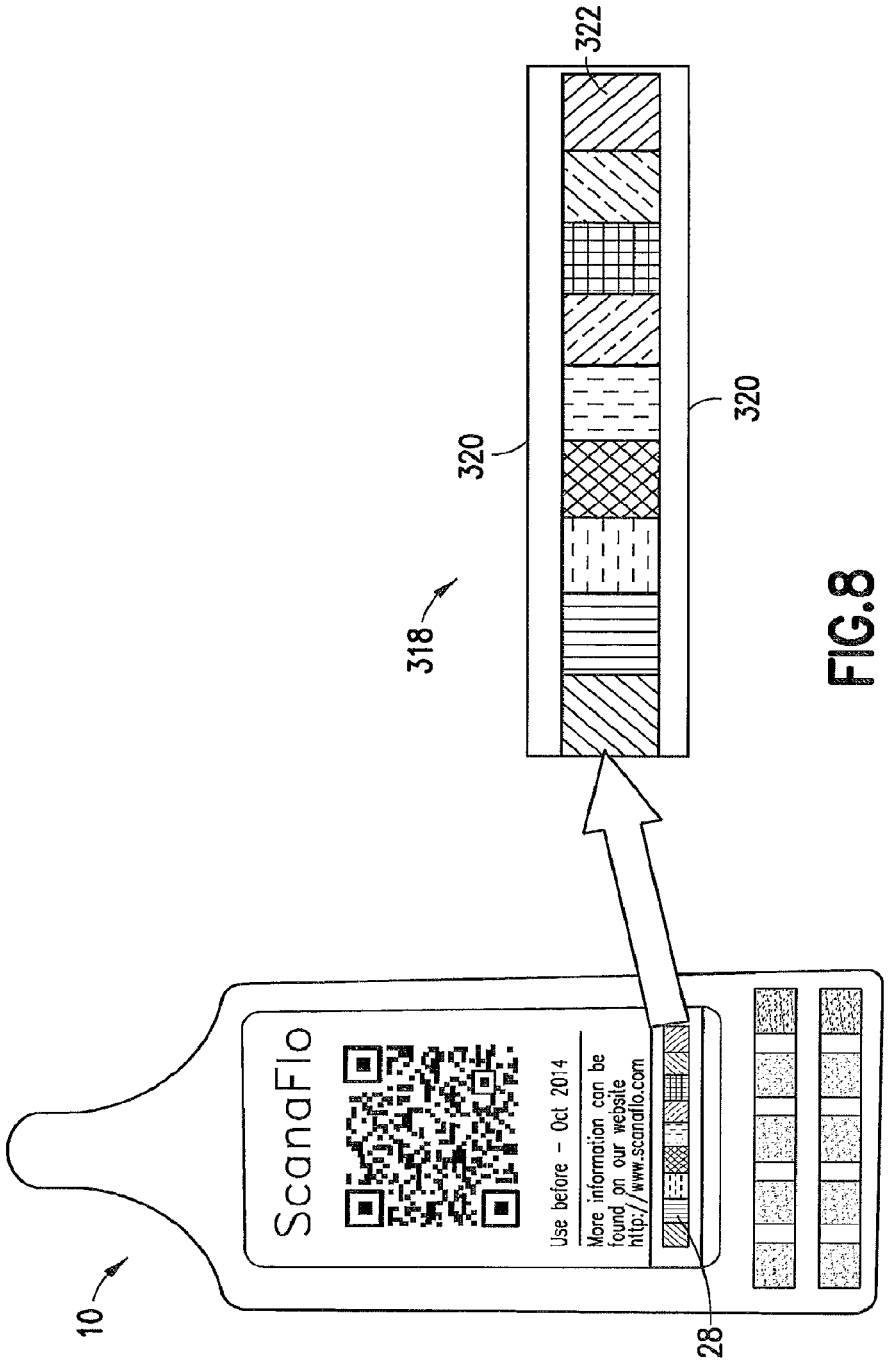
322
320
320
318
10
ScanaFlo
Use before – Oct 2014
More information can be found on our website http://www.scanaflo.com
28

FIG.8

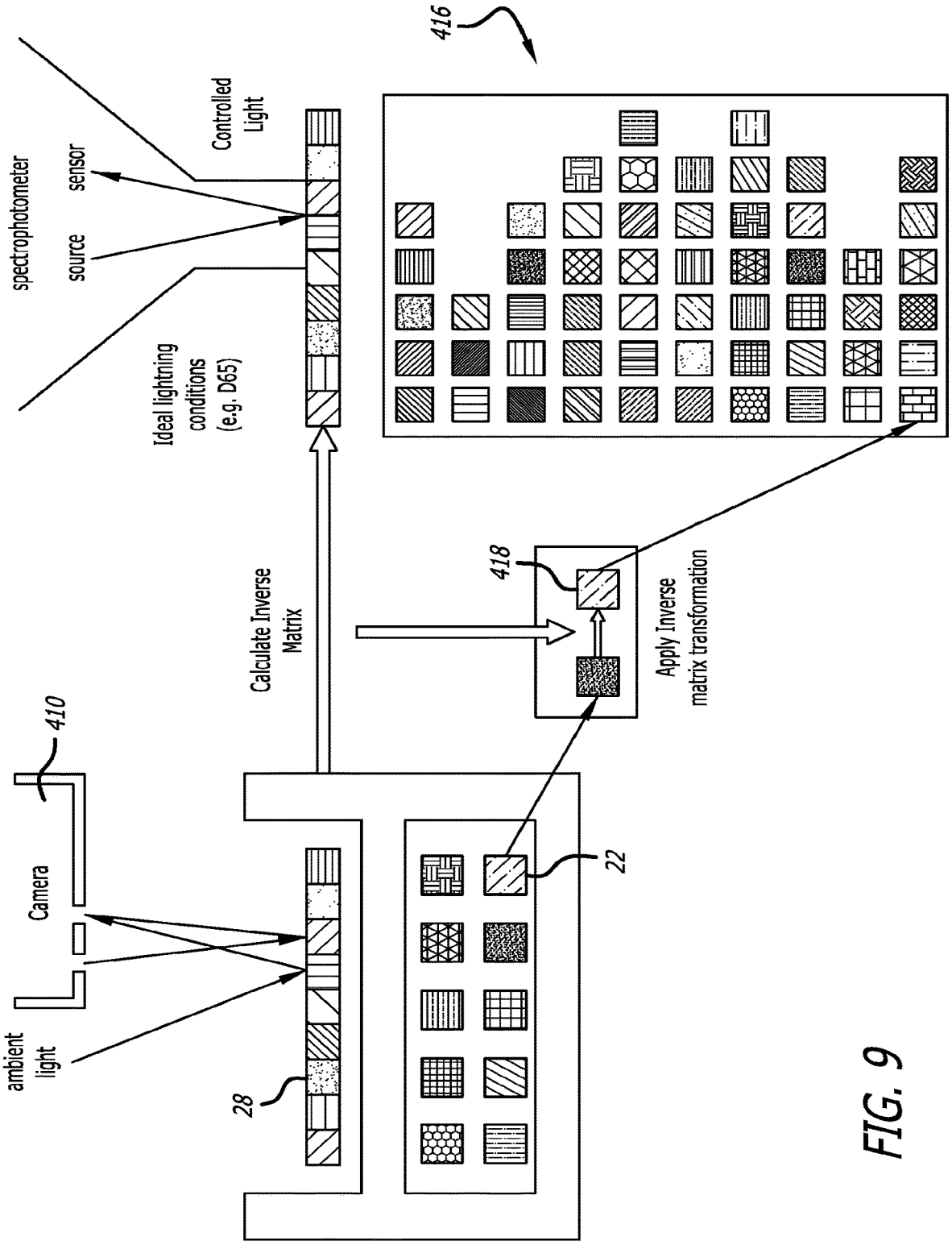
416
spectrophotometer
sensor
source
Controlled Light
Ideal lightning conditions (e.g. D65)
Calculate Inverse Matrix
418
Apply Inverse matrix transformation
410
Camera
ambient light
28
22

FIG. 9

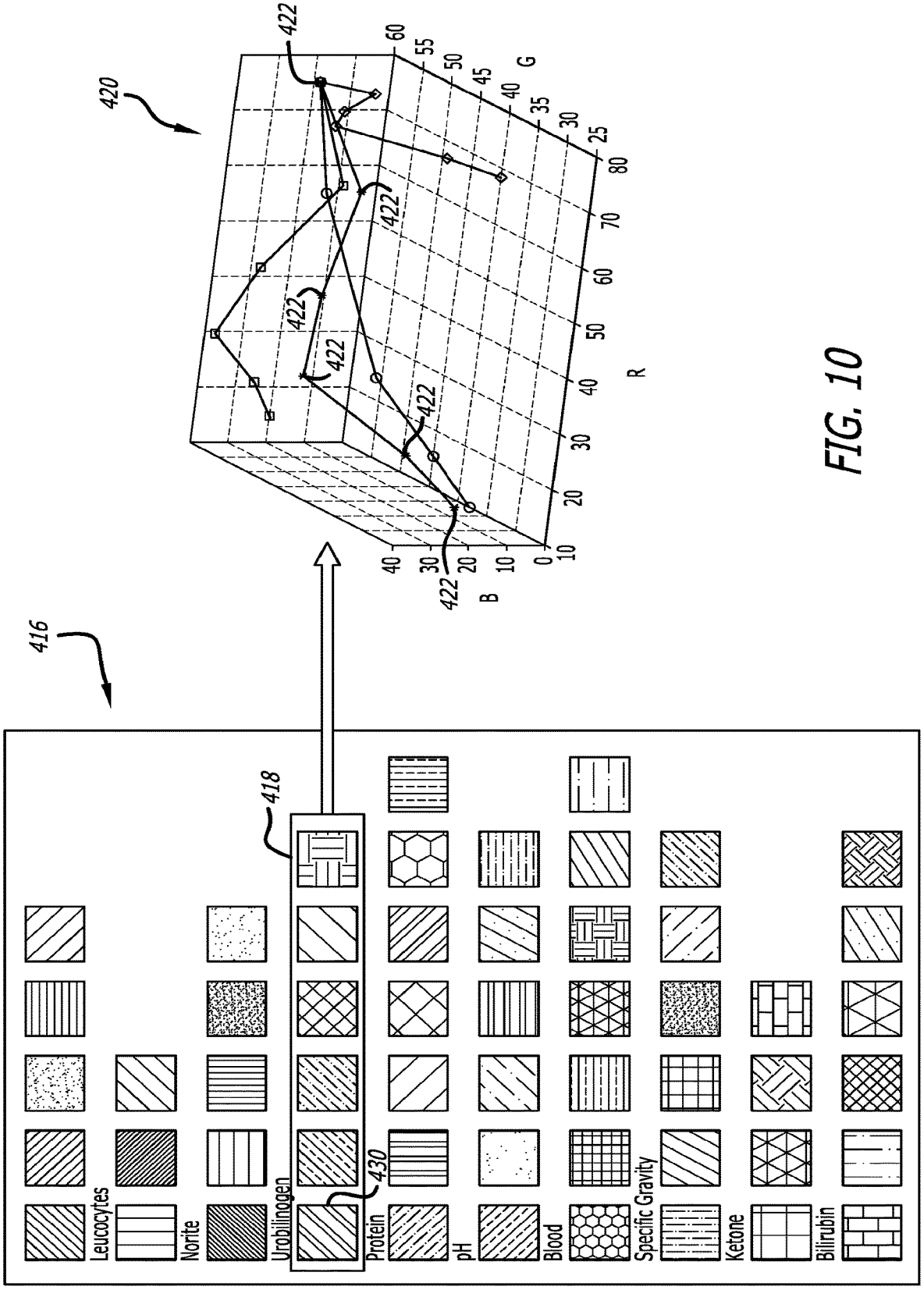
420
422
416
418
430
Leucocytes
Norite
Urobilinogen
Protein
pH
Blood
Specific Gravity
Ketone
Bilirubin
R
G
B

FIG. 10

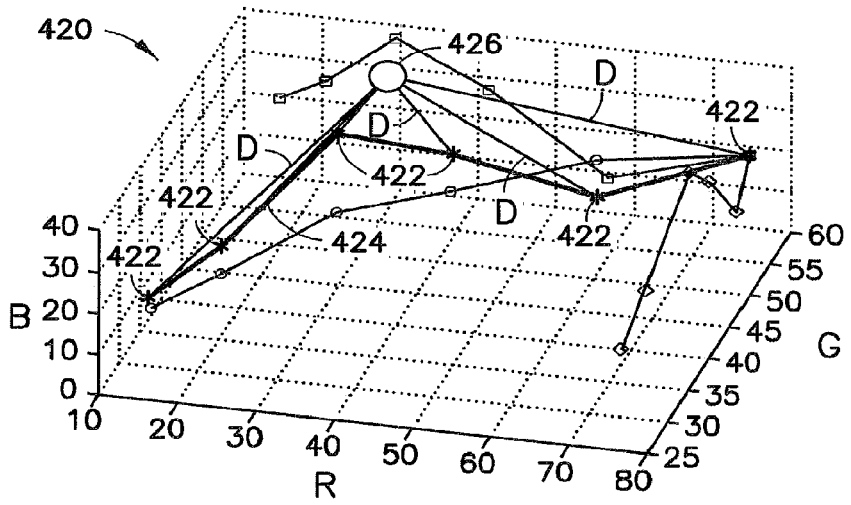
420
426
D
D
D
D
422
422
422
422
422
424
40
30
B 20
10
0
10
20
30
40
50
60
70
80
R
60
55
50
45
40
35
30
25
G

FIG. 11

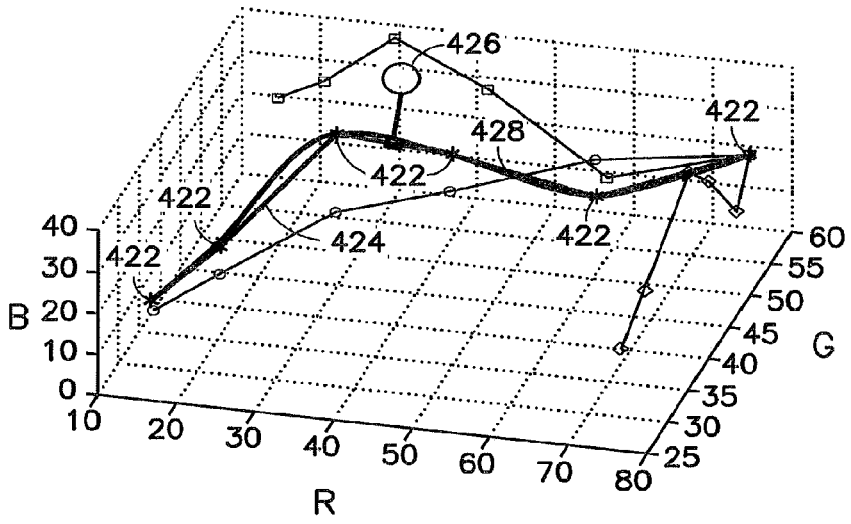
426
428
422
422
422
422
422
424
40
30
20
10
0
B
10
20
30
40
50
60
70
80
R
60
55
50
45
40
35
30
25
G

FIG. 12A

FIG. 12B

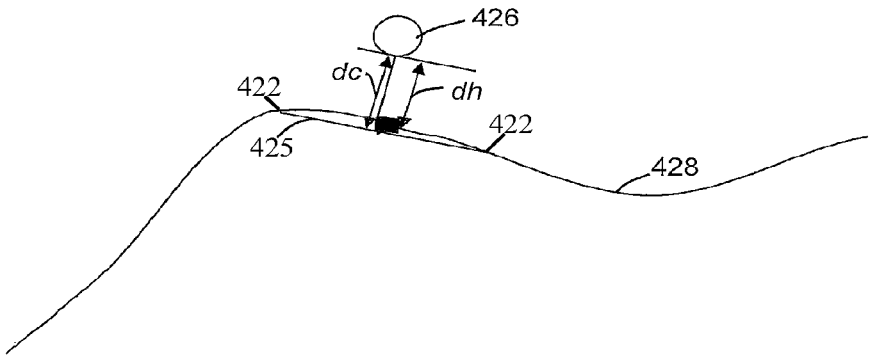

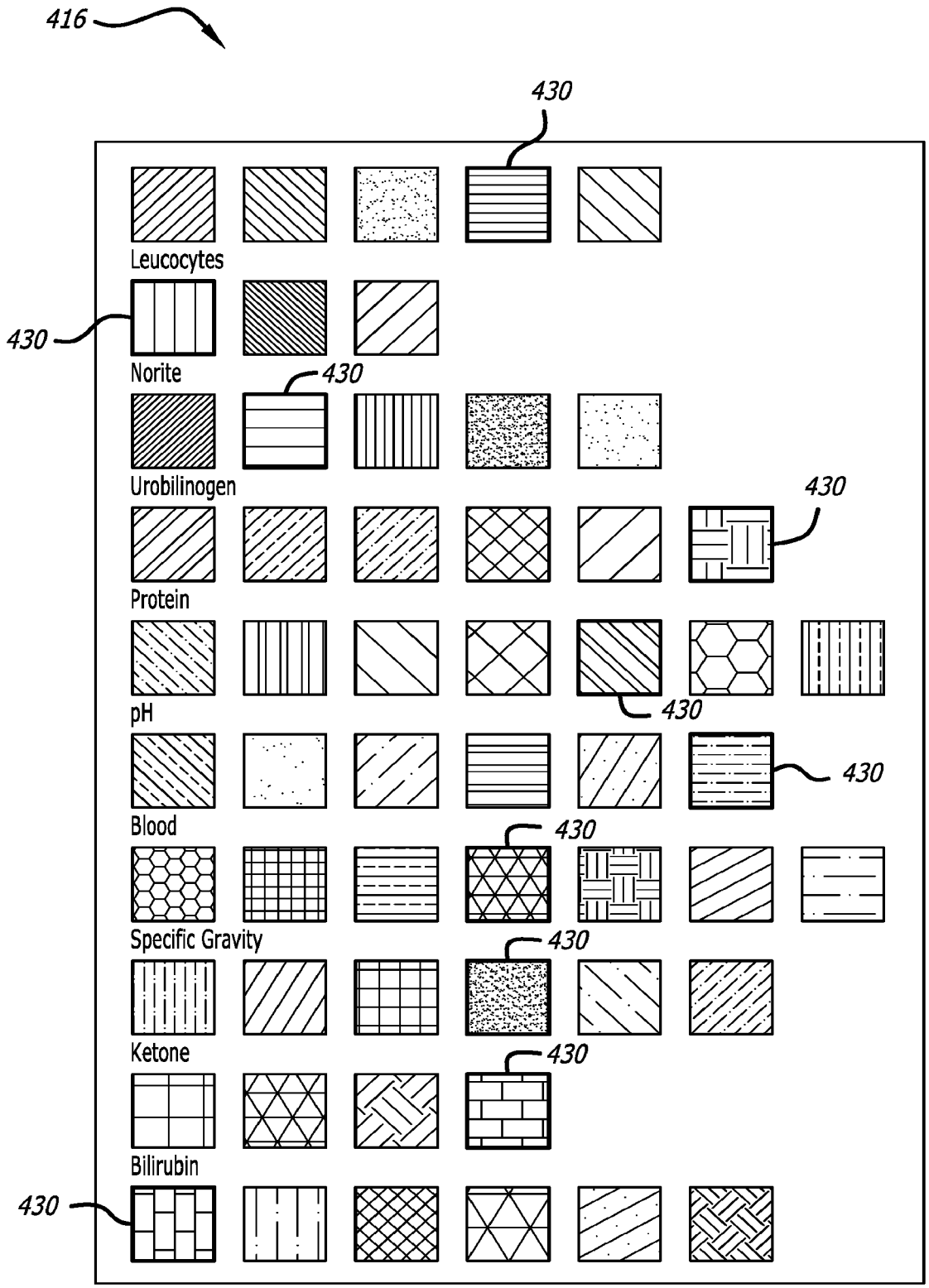
416
430
Leucocytes
430
Norite
430
Urobilinogen
430
Protein
pH
430
430
Blood
430
Specific Gravity
430
Ketone
430
Bilirubin
430

FIG. 13

FIG. 14

URINE LEUCOCYTES

Q : [Urine are cloudy ?/unusual smell ?]

Possible causes	**Prompted Questions**	**Associated readings**
Urinary tract Infection		
Bladder	[frequent needs to urinate]	[blood, sometimes] [nitrites]
Kidney	[if high fever]	[blood] [nitrites]
Inflammation		
Pregnancy	[pregnant]	[Proteins]
Sexual activity	[new partner] [increase in activity]	
Physical damage		
To Kidney	[antecedents of stones] [known kidney disease]	[Proteins] [blood] [creatinine]
To prostate	[known prostatic problems]	[Proteins] [blood]
Physical anomaly	[kidney duplication,...]	
False positive	[poor sample collection]	

FIG. 15

URINARY PROTEINS

Q: [Urine foamy?]
[Transient?]
[Permanent? More than 2 readings a few weeks apart]

If TRANSIENT:

Possible causes	Prompted Questions	Associated readings
High fever	[Fever]	
Extreme temperatures	[external temp] [Physical activity]	
Sport activities	[increased physical activity] [Extreme physical activity]	[Blood, Hemoglobin++]
Stress ++	[Stress or unusual event]	

If PERMANENT:

Possible causes	Prompted Questions	Associated readings
Urinary tract infection Bladder Kidney	[frequent needs to urinate] [if high fever]	[blood, sometimes] [nitrites] [leucocytes] [blood] [nitrites] [leucocytes]
High Blood pressure	[BP]	[blood traces, sometimes]
Kidney diseases Stones Consecutive to Systemic (see below)	[antecedents of stones] [known kidney disease]	[Proteins] [blood] [creatinine]
Heart problems	[heart condition, ...]	
Pre-eclampsia	[pregnancy] [high blood pressure] [sudden weight gain/ water retention]	[blood]
Diabetes (advanced)	[known?, duration?, insulin or not?] [vascular problems] [difficulty to march] [loss of sensitify: hands, feet,...]	[sugar] [blood] [creatinine]
Drugs side effects	[intake of antibiotics] [intake of aminoglycosides (names)] [altered hearing] [recent use of painkiller] [intake of phenazone derivatives (names)]	[creatinine]
Systemic diseases	[known SD] [high blood pressure, sometimes]	[blood, sometimes] [creatinine] [bilirubine] [leucocytes]

ex of SD: Rheumatoid arthritis, Hodgkin lymphoma, multiple myeloma.

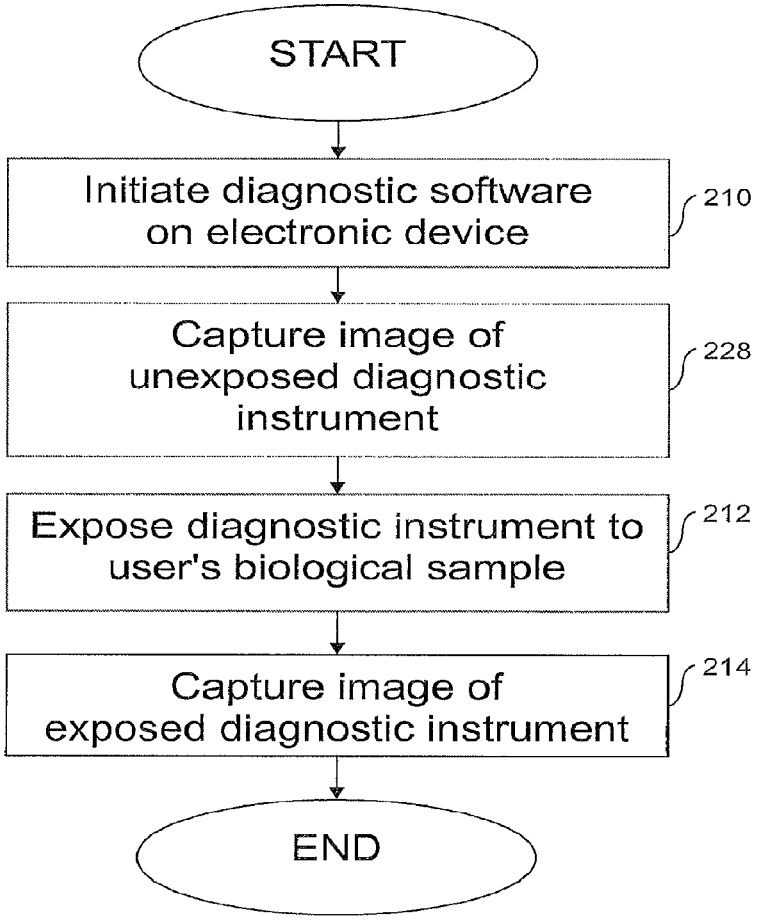
START
Initiate diagnostic software on electronic device
210
Capture image of unexposed diagnostic instrument
228
Expose diagnostic instrument to user's biological sample
212
Capture image of exposed diagnostic instrument
214
END

FIG. 16

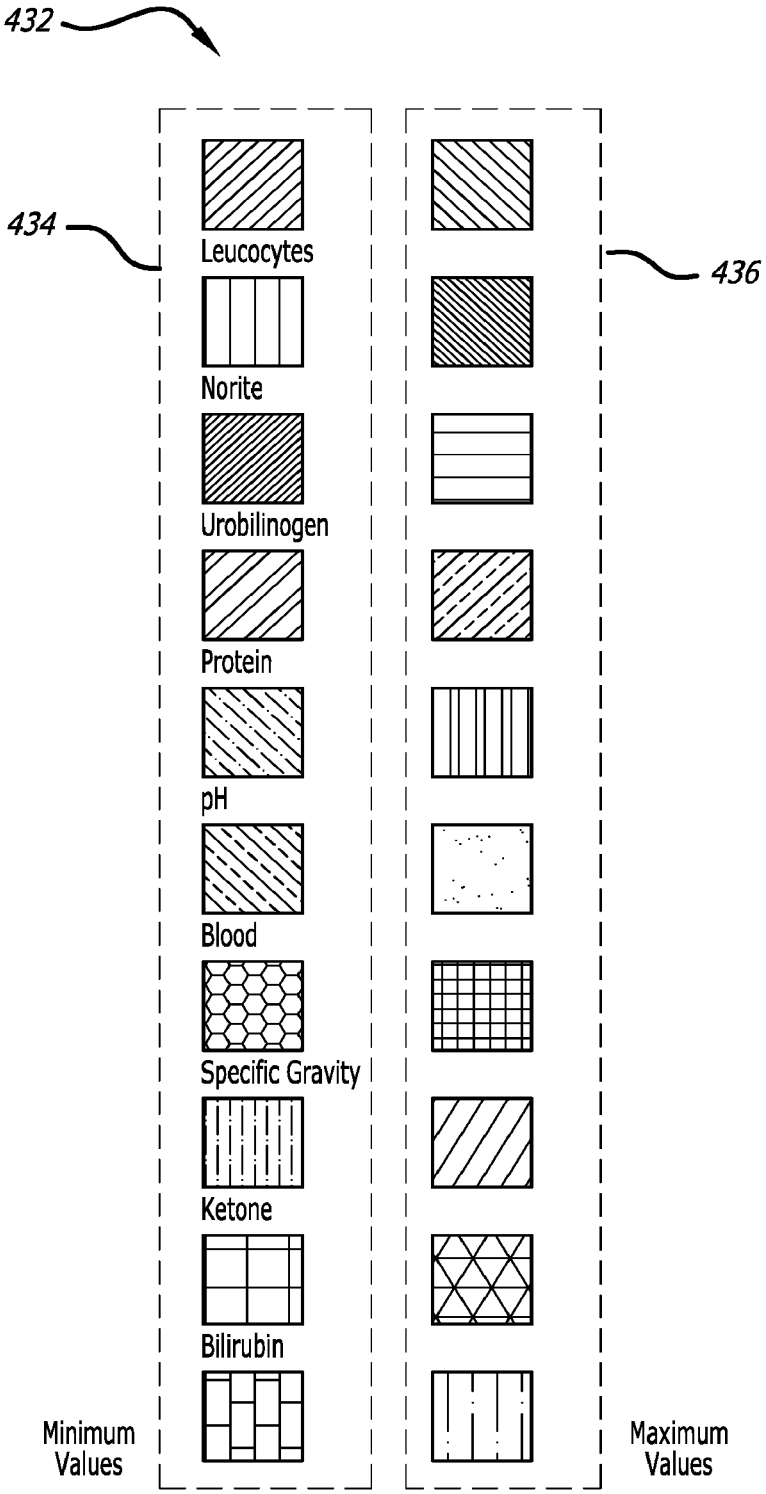
432
434
436
Leucocytes
Norite
Urobilinogen
Protein
pH
Blood
Specific Gravity
Ketone
Bilirubin
Minimum Values
Maximum Values

FIG. 17

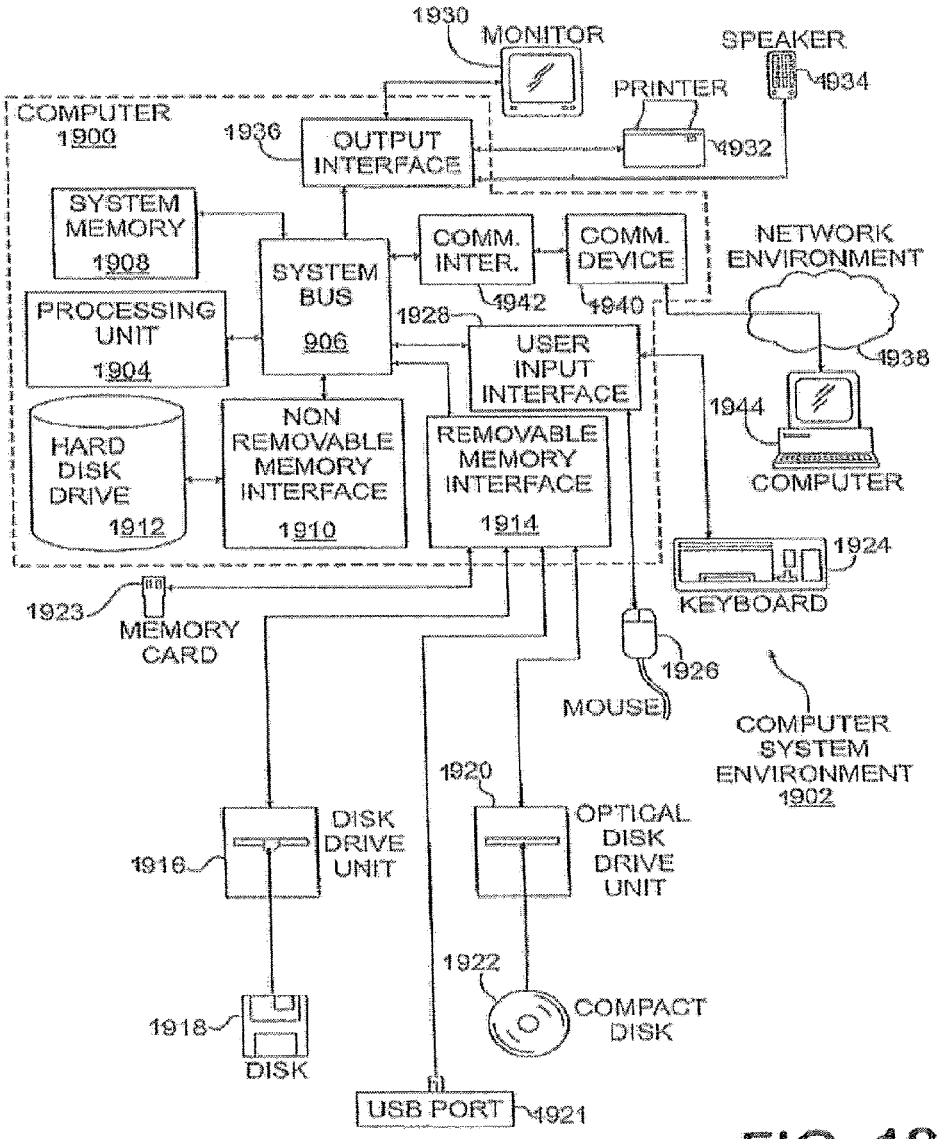
1930
MONITOR
SPEAKER
1934
PRINTER
COMPUTER
1900
1936
OUTPUT INTERFACE
1932
SYSTEM MEMORY
1908
SYSTEM BUS
906
COMM. INTER.
1942
COMM. DEVICE
1940
NETWORK ENVIRONMENT
1938
PROCESSING UNIT
1904
1928
USER INPUT INTERFACE
1944
COMPUTER
HARD DISK DRIVE
1912
NON REMOVABLE MEMORY INTERFACE
1910
REMOVABLE MEMORY INTERFACE
1914
1924
KEYBOARD
1923
MEMORY CARD
1926
MOUSE
COMPUTER SYSTEM ENVIRONMENT
1902
1920
DISK DRIVE UNIT
1916
OPTICAL DISK DRIVE UNIT
1922
COMPACT DISK
1918
DISK
USB PORT
1921

FIG. 18

FIG. 19A

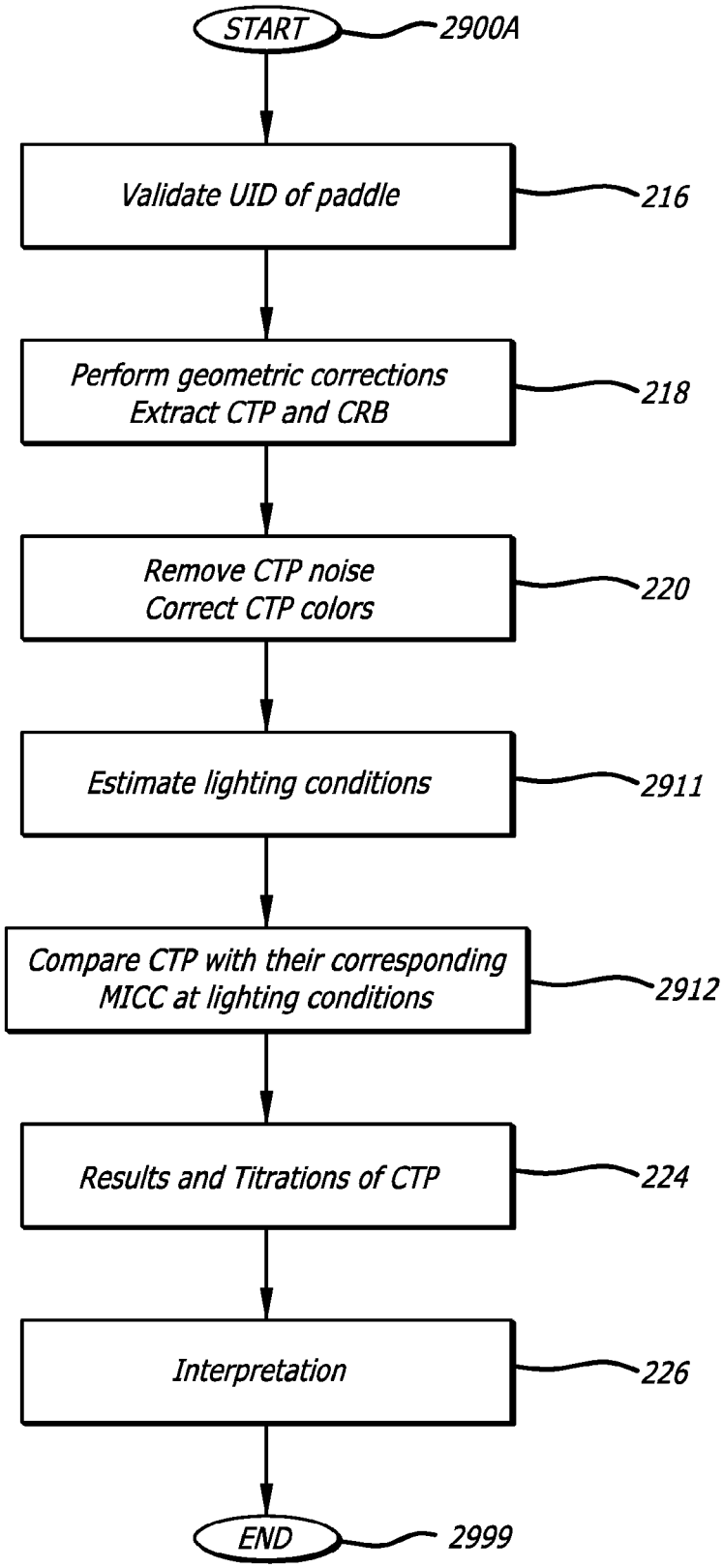
START
2900A
Validate UID of paddle
216
Perform geometric corrections
Extract CTP and CRB
218
Remove CTP noise
Correct CTP colors
220
Estimate lighting conditions
2911
Compare CTP with their corresponding
MICC at lighting conditions
2912
Results and Titrations of CTP
224
Interpretation
226
END
2999

FIG. 19B

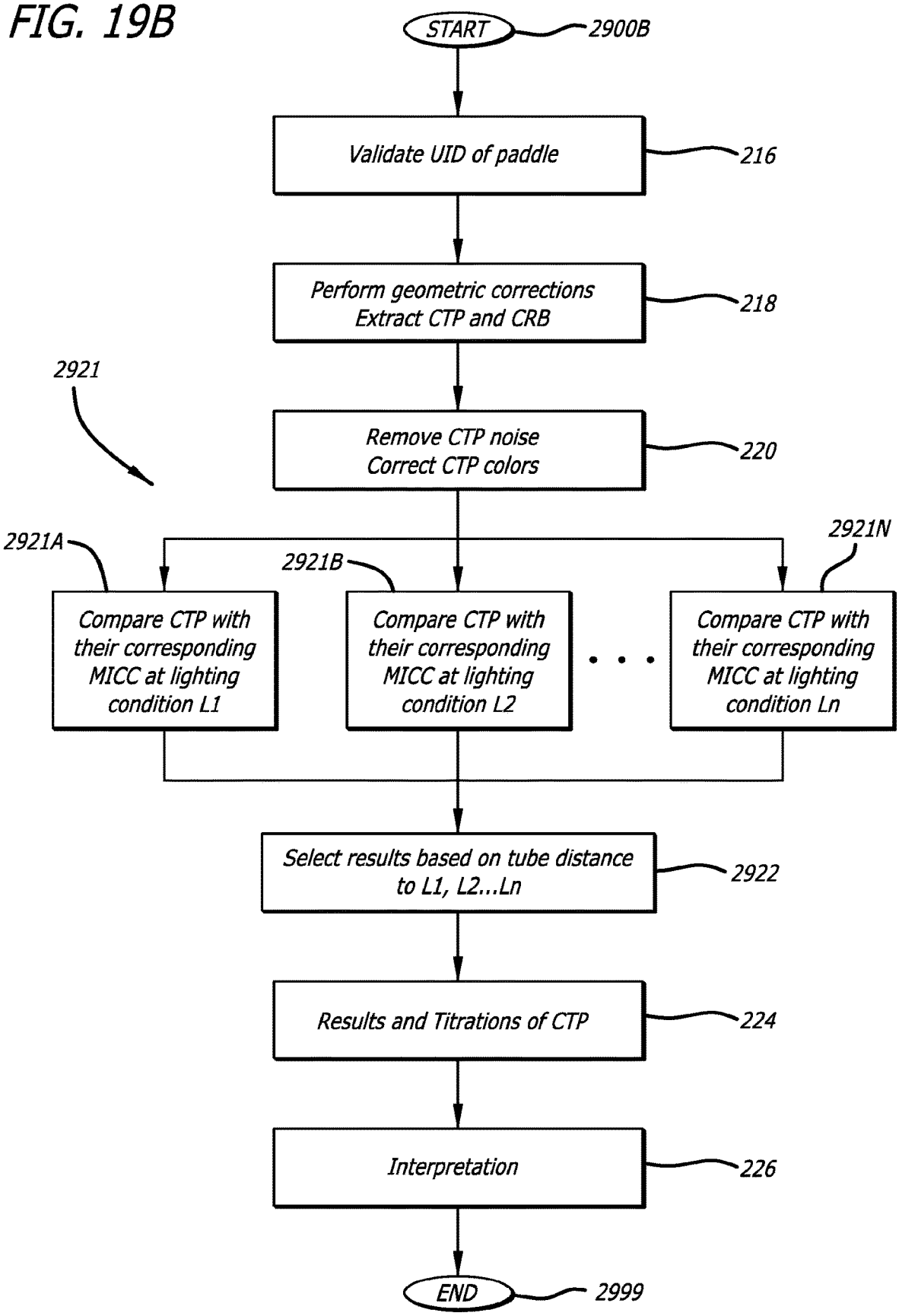
START
2900B
Validate UID of paddle
216
Perform geometric corrections
Extract CTP and CRB
218
2921
Remove CTP noise
Correct CTP colors
220
2921A
2921B
2921N
Compare CTP with their corresponding MICC at lighting condition L1
Compare CTP with their corresponding MICC at lighting condition L2
Compare CTP with their corresponding MICC at lighting condition Ln
Select results based on tube distance to L1, L2...Ln
2922
Results and Titrations of CTP
224
Interpretation
226
END
2999

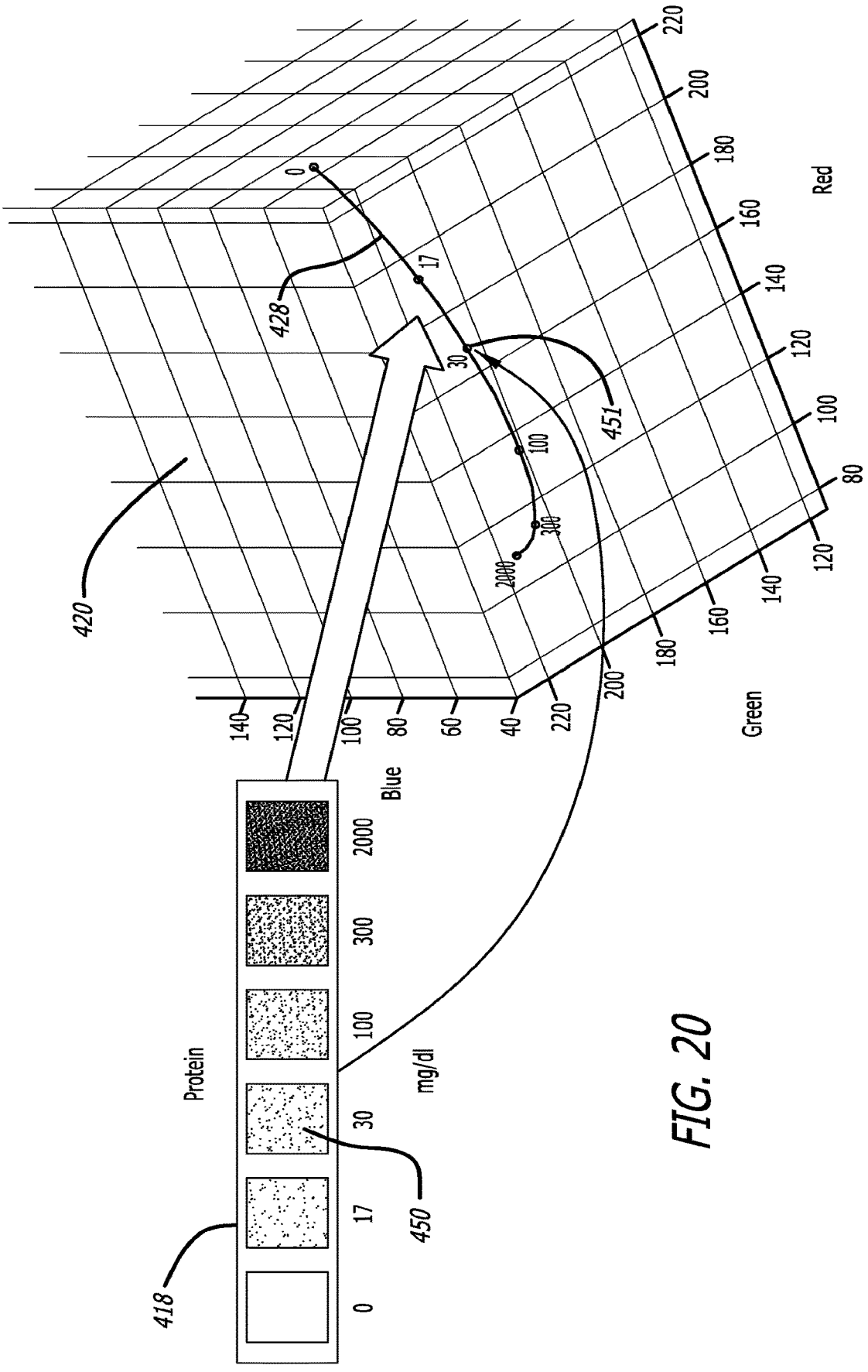
Protein
mg/dl
0
17
30
100
300
2000
Blue
140
120
100
80
60
40
Green
220
200
180
160
140
120
Red
220
200
180
160
140
120
100
80
418
450
428
420
451

FIG. 20

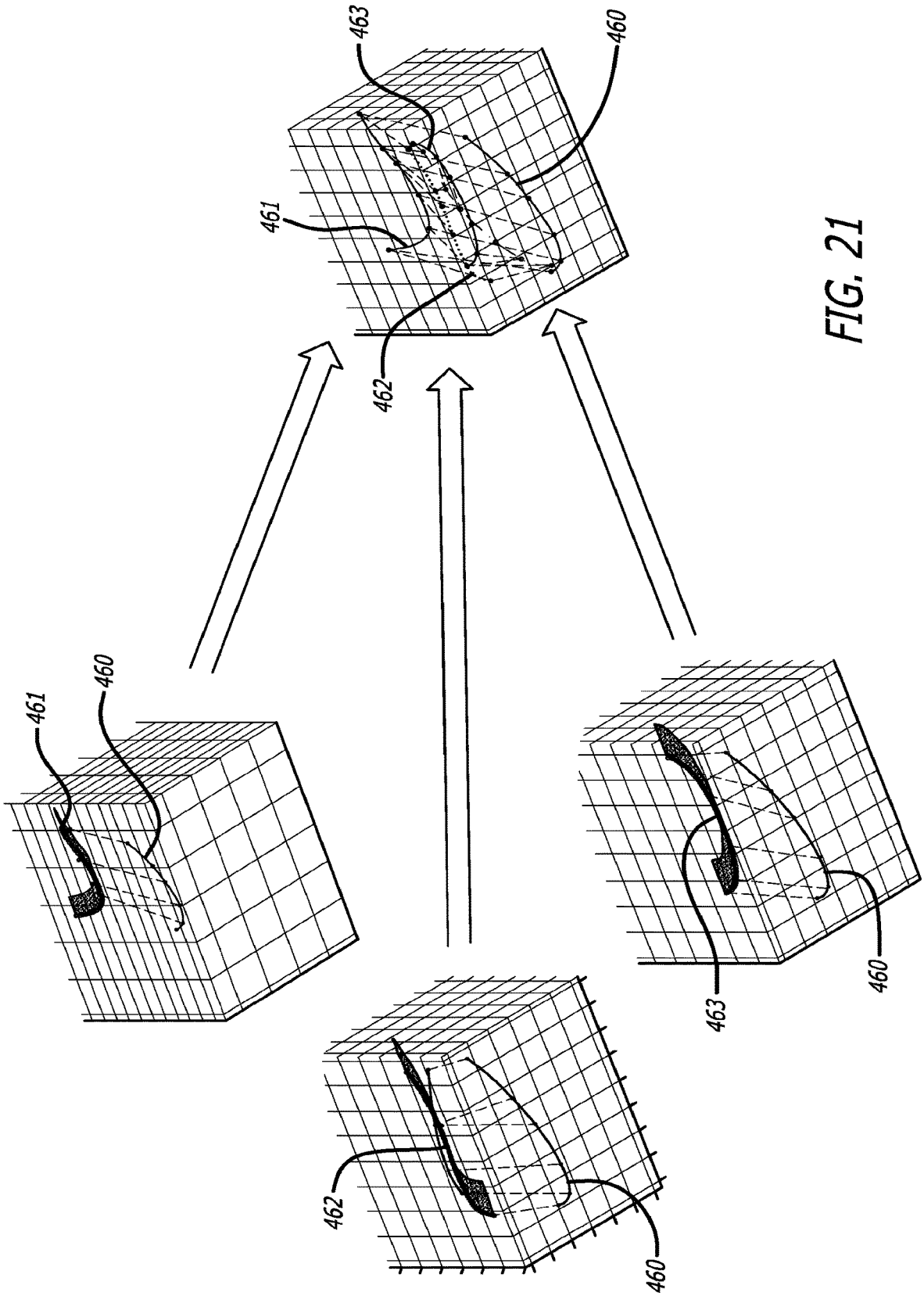

FIG. 21

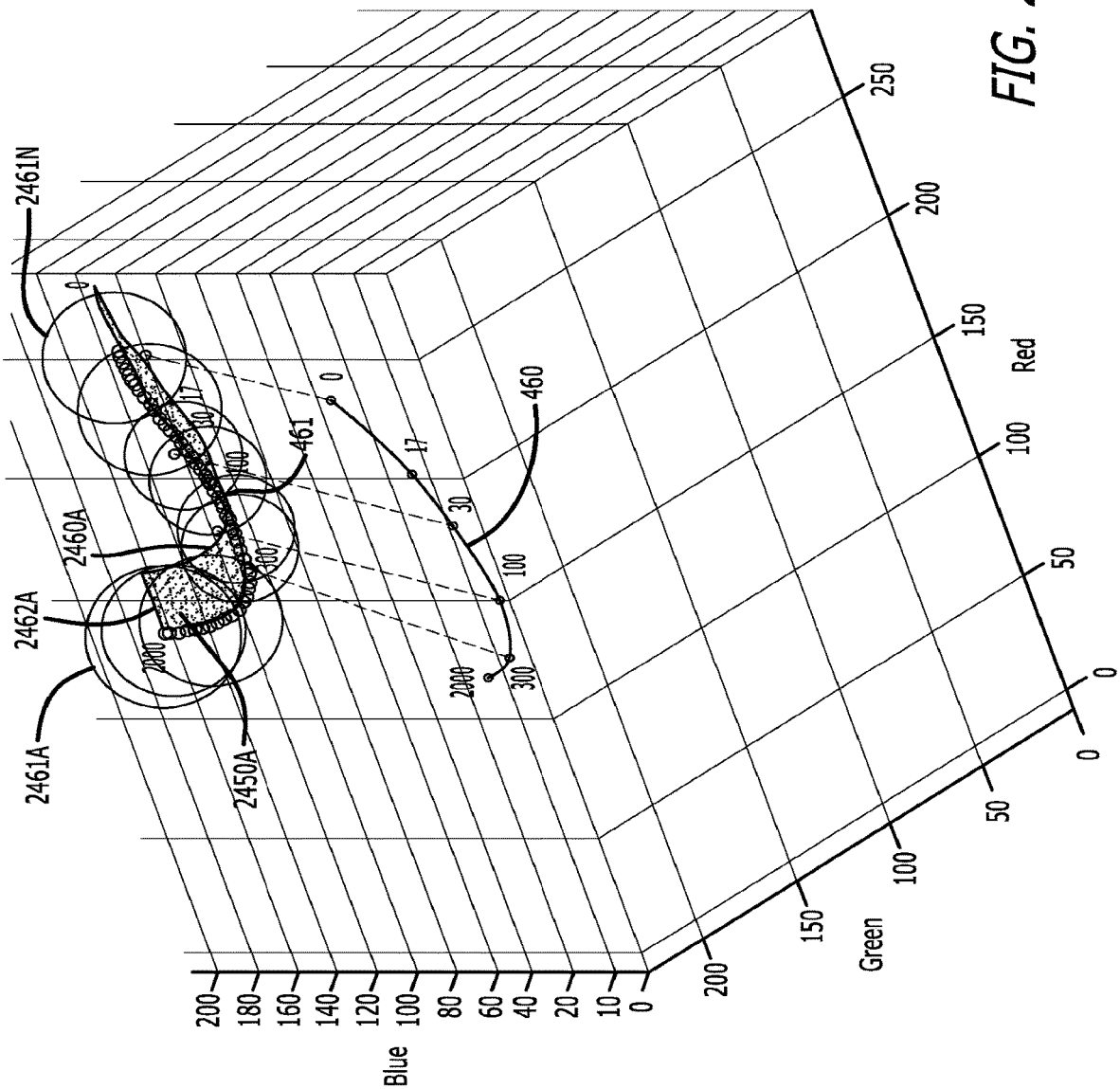
2461N
2460A
2462A
2461A
2450A
461
460
0
17
30
100
300
2000
Blue
200
180
160
140
120
100
80
60
40
20
10
0
Green
0
50
100
150
200
Red
0
50
100
150
200
250

FIG. 22A

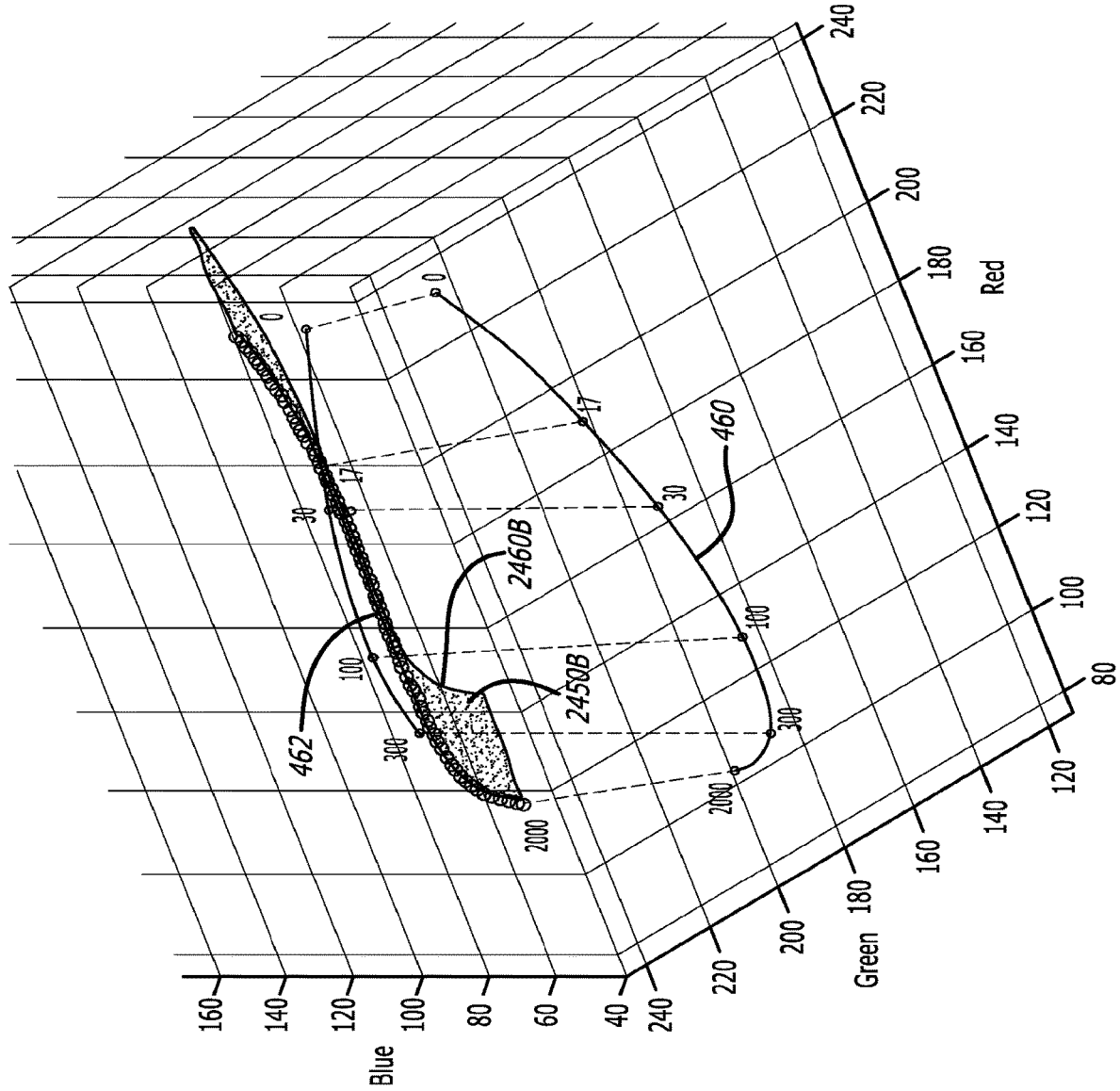
Blue
160
140
120
100
80
60
40
Green
240
220
200
180
160
140
120
Red
240
220
200
180
160
140
120
100
80
0
17
30
100
300
2000
462
2460B
2450B
460

FIG. 22B

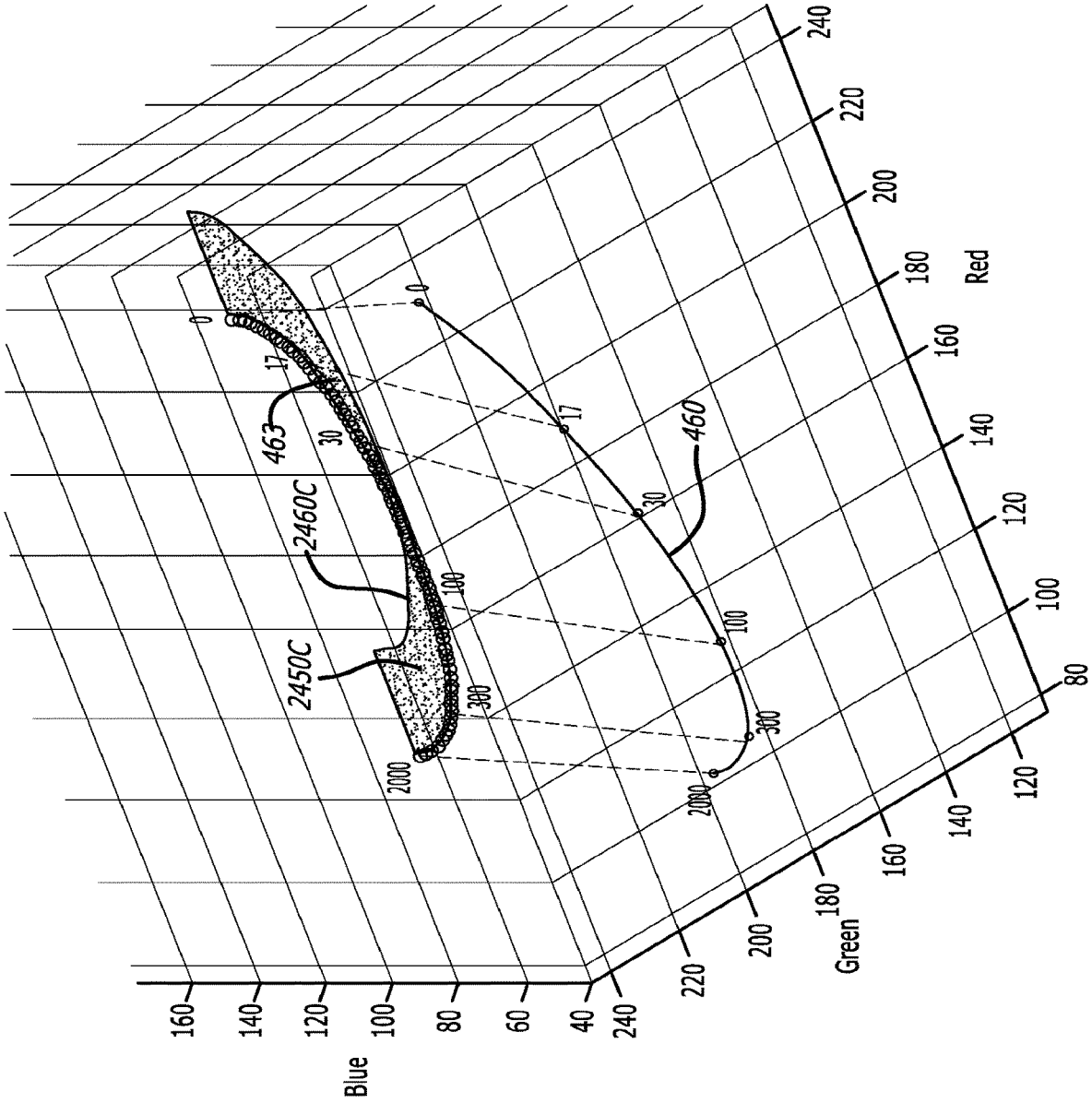
Blue
160
140
120
100
80
60
40
Green
240
220
200
180
160
140
120
Red
240
220
200
180
160
140
120
100
80
0
17
30
100
300
2000
463
2460C
2450C
460

FIG. 22C

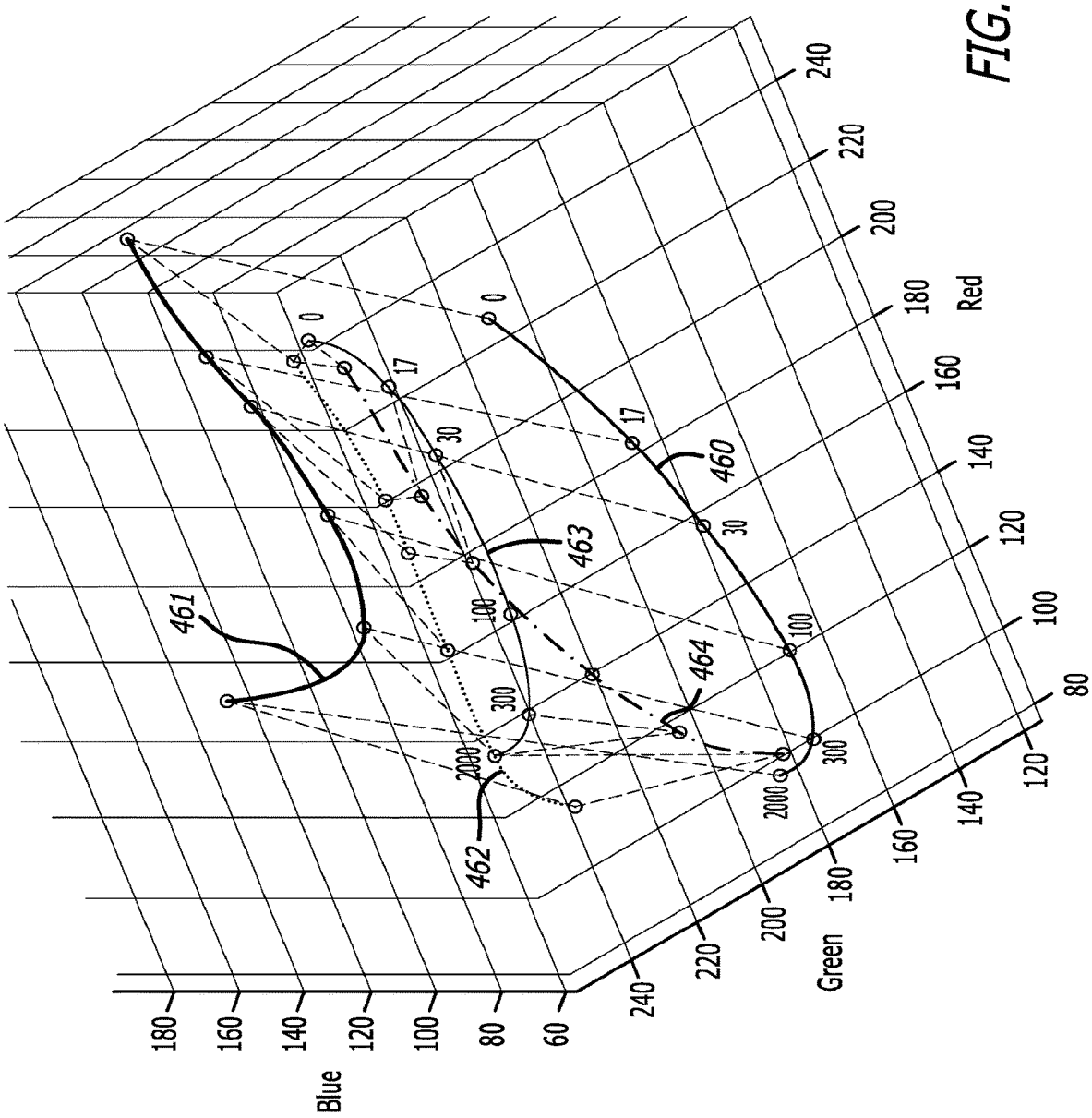
Blue
180
160
140
120
100
80
60
Green
240
220
200
180
160
140
120
Red
240
220
200
180
160
140
120
100
80
0
17
30
100
300
2000
461
462
463
464
460

FIG. 22D

QUANTIFYING COLOR CHANGES IN CHEMICAL TEST PADS INDUCED BY DIFFERENT CONCENTRATIONS OF ANALYTES UNDER DIFFERENT LIGHTING CONDITIONS

CROSS REFERENCE TO RELATED APPLICATIONS

This application is a continuation of Ser. No. 17/467,863 (now U.S. Pat. No. 11,802,839), filed Sep. 7, 2021, which is a continuation application of U.S. patent application Ser. No. 16/297,630 (now U.S. Pat. No. 11,131,633), filed Mar. 9, 2019, which is a continuation application of U.S. patent application Ser. No. 15/055,643 (now U.S. Pat. No. 10,267,743), filed Feb. 29, 2016, which is a continuation of U.S. patent application Ser. No. 14/633,513 (now U.S. Pat. No. 9,285,323), filed Feb. 27, 2015, which claims the benefit of U.S. Provisional Application No. 61/948,356, filed Mar. 5, 2014. Each of these applications are incorporated by reference in their entireties herein.

U.S. application Ser. No. 14/633,513 is a continuation-in-part of U.S. application Ser. No. 14/419,939 (now U.S. Pat. No. 9,311,520), filed Feb. 6, 2015, and is a national stage application of PCT Application PCT/US2013/035397, filed Apr. 5, 2013. PCT/US2013/035397 claims the benefit of U.S. Provisional Application No. 61/680,842, filed Aug. 8, 2012. Each of these applications are also incorporated by reference in their entireties herein.

FIELD

The embodiments generally relate to apparatus, systems, and methods for detecting the presence or absence of a variety of analytes in a fluid sample using a diagnostic instrument.

BACKGROUND

Reagent dipsticks and immunoassays have been used in medical clinics for decades in connection with methods for rapidly diagnosing health conditions at the point of care. In a clinical environment, dipsticks have been used for the diagnosis of urinary tract infections, preeclampsia, proteinuria, dehydration, diabetes, internal bleeding and liver problems. As is known, dipsticks are laminated sheets of paper containing reagents that change color when exposed to an analyte solution. Each reagent test pad on the dipstick is chemically treated with a compound that is known to change color in the presence of particular reactants. For example in the context of urinalysis, the dipstick will typically include reagent pads for detecting or measuring analytes present in a biological sample such as urine, including glucose, bilirubin, ketones, specific gravity, blood, pH, protein, urobilirubin, nitrite, leukocytes, microalbumin and creatinin.

The magnitude of this color change is proportional to analyte concentration in the patient fluid. Dipsticks are typically interpreted with the naked eye by comparing the test strip against a colored reference chart. However, such color comparison can cause user confusion and error, for several reasons including changes in ambient lighting, and that a significant portion of the population has impaired color vision.

Automatic methods and apparatus for interpreting test results of dipsticks and immunoassays, which have been exposed to a sample solution, are known in the art. For example, U.S. Patent Application Publication No. 2012/63652 to Chen and all (hereinafter "the '652 publication") discloses a method for color-based reaction testing of biological materials, albeit in an un-calibrated environment, by capturing a digital image of both a test strip and a colored reference chart side by side in a single image. The test results for the test strip are automatically obtained by performing simple color matching between the reacted regions of the test strip and the color reference chart to determine analyte concentration of the biological material.

When employing the method disclosed by the '652 publication, a user must properly align the test strip and the color reference chart before capturing the digital image. Therefore, a user must come into contact with the exposed test strip, after it is soiled by biological samples, such as urine, blood, or feces, and place it in an appropriate position relative to the color reference chart. Therefore, to assist in placement of the test strip and/or chart, automatic interpretation apparatus often include an additional positioning element, such as a box or carpet, to position both the test strips and the chart in the correct orientation.

In view of the problems with presentably available methods for automatically reading test strips, there is a need for an automated testing method, which uses a digital image captured in an un-calibrated environment. The system or method should be configured to automatically calibrate the digital image to correct any color deficiencies, artifacts, or other ambiguities. The method should also automatically identify the relevant portions of the digital image, regardless of how the test strip and/or color reference are positioned in the digital image. Finally, the method should minimize manipulation of samples soiled with biological fluids. The presently invented method and system address these deficiencies of known automatic detection devices, systems, and methods.

SUMMARY

Generally provided are a method and electronic user device for performing quantitative assessment of color changes induced by exposure of multiple test strips to a biological material/fluid. Preferably, the provided system and method permits automatic calibration of a digital image of a plurality of test media which have been exposed to a sample solution, for the purpose of determining whether certain analytes are present or absent from the sample solution. More preferably, one or more embodiments provide a method and electronic user device to quantify color changes induced in various test strips by exposure to the sample. This quantification is based on an automatic calibrating protocol, independent of variations in the external environment. The embodiments can yield accurate, precise, and cost effective measurements while minimizing the user interaction with biological samples. This method is designed to support medical scientific instruments complying with FDA and EU regulations in the field aimed at minimizing errors.

Therefore according a preferred and non-limiting embodiment, a computer-implemented method for quantifying color change of at least one test medium on a diagnostic instrument is provided. The method includes the step of capturing a digital image of at least a portion of the diagnostic instrument, which has been exposed to a biological sample. The diagnostic instrument includes at least one color reference comprising a plurality of reference samples of different colors and at least one test medium containing a reagent, which changes color in the presence of particular analytes in the biological sample. The method further

includes the following steps: identifying at least one of the reference samples for the at least one medium in the diagnostic instrument; determining a dominant camera-captured color of a reference sample and a dominant camera-captured color of the at least one test medium; color correcting the dominant camera-captured color of the at least one test medium based on a correction factor derived at least in part from the dominant camera-captured color of the reference sample to determine a corrected test medium color; and comparing the corrected test medium color to a set of possible test medium colors corresponding to predetermined analyte concentrations to determine a test result including an analyte concentration of the biological sample being tested.

In accordance with a further embodiment, a computer-implemented method for determining a relative position on a diagnostic instrument includes the step of capturing a digital image of at least a portion of the diagnostic instrument, which has been exposed to a biological sample. The diagnostic instrument includes at least one test medium containing a reagent, which changes color in the presence of particular analytes in the biological sample. The method further includes the following steps: scanning the digital image to identify the position of a predetermined region on the diagnostic instrument; identifying the at least one test medium on the digital image based at least in part on the position of the predetermined region; and determining a test result by comparing the color of the at least one test medium to a set of possible test medium colors corresponding to predetermined analyte concentrations to determine an analyte concentration of the biological sample being tested.

In accordance with a further embodiment, a method for validating a diagnostic instrument includes the step of capturing a pre-use digital image of at least a portion of the diagnostic instrument, prior to exposing the diagnostic instrument to a biological sample. The diagnostic instrument includes at least one color reference comprising a plurality of reference samples of different colors and at least one test medium containing a reagent, which changes color in the presence of particular analytes in the biological sample. The method further includes the following steps: identifying the at least one test medium in the pre-use digital image of the diagnostic instrument; comparing a color of the at least one test medium to a set of possible test medium colors for reagents, which have not been exposed to an analyte; and determining whether the diagnostic instrument is in condition for use based at least in part on the color of the at least one test medium.

In accordance with a further embodiment, a diagnostic instrument for identifying a plurality of test results by testing a single patient fluid is provided. The instrument includes: an instrument housing; a color reference comprising a plurality of reference samples of different colors affixed to or associated with the housing for determining the test results from a digital image of the diagnostic instrument; and a plurality of test media affixed to the housing containing color-changing reagents, which change color in the presence of particular analytes in a biological sample.

In accordance with a further embodiment, a system for performing diagnostic tests of a biological sample is provided. The system includes a diagnostic instrument and a portable electronic device having a camera sensor for capturing a digital image of at least a portion of the diagnostic instrument and a processor. The diagnostic instrument includes a color reference having a plurality of reference samples of different colors and a plurality of test media containing reagents, which change color in the presence of particular analytes in the biological sample. The processor of the portable electronic device is configured to: identify at least one of the reference samples and at least one of the test media on the digital image of the diagnostic instrument; determine a dominant camera-captured color of a reference sample and a dominant camera-captured color of at least one test medium; color correct the dominant camera-captured color of the at least one test medium based on a correction factor derived at least in part from the dominant camera-captured color of the reference sample to determine a corrected test medium color; and compare the corrected test medium color to a set of possible test medium colors corresponding to predetermined analyte concentrations to determine a test result including an analyte concentration of the biological sample being tested.

In accordance with a further embodiment, a portable electronic device for analyzing a digital image of a diagnostic instrument is provided. The diagnostic instrument includes at least one color reference having a plurality of reference samples of different colors and at least one test medium containing a reagent, which changes color in the presence of particular analytes in the biological sample. The portable electronic device includes: at least one processor; at least one display device; at least one camera sensor; and at least one computer-readable medium including program instructions. When executed by the at least one processor, the programming instructions cause the portable electronic device to: capture a digital image of at least a portion of the diagnostic instrument, which has been exposed to a biological sample, with the camera sensor; identify at least one of the reference samples for the at least one medium in the diagnostic instrument; determine a dominant camera-captured color of a reference sample and a dominant camera-captured color of the at least one test medium; color correct the dominant camera-captured color of the at least one test medium based on a correction factor derived at least in part from the dominant camera-captured color of the reference sample to determine a corrected test medium color; and compare the corrected test medium color to a set of possible test medium colors corresponding to predetermined analyte concentrations to determine a test result including an analyte concentration of the biological sample being tested.

These and other features and characteristics of the embodiments, as well as the methods of operation and functions of the related elements of structures and the combination of parts and economies of manufacture, will become more apparent upon consideration of the following description and the appended claims with reference to the accompanying drawings, all of which form a part of this specification, wherein like reference numerals designate corresponding parts in the various figures. It is to be expressly understood, however, that the drawings are for the purpose of illustration and description only and are not intended as a definition of the limits of the embodiments. As used in the specification and the claims, the singular form of "a", "an", and "the" include plural referents unless the context clearly dictates otherwise.

BRIEF DESCRIPTION OF THE DRAWINGS

For the purpose of facilitating understanding of the embodiments, the accompanying drawings and description illustrate embodiments thereof, its various structures, construction, methods of operation, and many advantages that may be understood and appreciated.

FIG. **1** is a top view of one embodiment of a diagnostic instrument.

FIG. **2** is a schematic view of one embodiment of a system for analyzing a biological sample using the diagnostic instrument of FIG. **1**.

FIG. **3** is a flow chart of an embodiment of a method for capturing an image of a diagnostic instrument.

FIG. **4** is a flow chart of an embodiment of a method for determining a patient condition from a digital image of a diagnostic instrument.

FIG. **5** is a schematic view of a Manufacturing Interpretation Color Chart (MICC) for use in urinalysis with colors that can be captured by the diagnostic instrument.

FIGS. **6**A-**6**D are photographic representations of a diagnostic instrument with markings to indicate the orientation of the instrument in the photograph relative to the x-axis, the y-axis, or the z-axis.

FIGS. **7**A-**7**C are schematic representations of magnified views of color test pads including background artifacts, as identified by the geometric correction calculations of the method of FIG. **4**.

FIG. **8** is a magnified photographic representation of a reference color bar as identified by the geographic correction calculations, of the method of FIG. **4**.

FIG. **9** is a schematic view of the process for color correcting a digital image of the chemical test pads (CTPs).

FIG. **10** is a schematic representation indicating that color samples from a Manufacturing Interpretation Color Chart are mapped in the Red-Green-Blue (RGB) color space.

FIG. **11** is a schematic view of the RGB color space of FIG. **10**, including the color samples from the MICC and a corrected test medium color.

FIG. **12**A is a schematic view of the RGB color space including a color trajectory derived from the MICC color samples and a corrected test medium color.

FIG. **12**B is a magnified schematic view of the color trajectory of FIG. **12**A.

FIG. **13** is a photographic representation of a Manufacturing Interpretation Color Chart with test results identified.

FIG. **14** is one embodiment of a decision tree for identifying patient conditions related to increased urine leucocytes.

FIG. **15** is one embodiment of a decision tree for identifying a patient condition related to an increase in urinary proteins.

FIG. **16** is a flow chart of an embodiment of a method for capturing an image of a diagnostic instrument.

FIG. **17** is a schematic view of a table depicting minimum and maximum color change values for a plurality of chemical test pads, for use in verification of a diagnostic instrument.

FIG. **18** is a schematic diagram of a computer network infrastructure according to the prior art.

FIG. **19**A is a flow chart of an embodiment of a method for determining a patient condition from a digital image of a diagnostic instrument in various lighting conditions, by estimation of ambient lighting to compare the measurements to trajectories taken in similar conditions.

FIG. **19**B is a flow chart of an embodiment of a method for determining a patient condition from a digital image of a diagnostic instrument in various lighting conditions, by comparing the measurements to multiple lighting conditions and selecting the best one within the confidence validity tube of a trajectory.

FIG. **20** is a schematic view of a method for constructing an absolute color curve—(ACC).

FIG. **21** is a schematic view of a method for shifting absolute color curves according to lighting conditions and combining them with the original absolute color curve into a set of color trajectories used for recognition under any lighting condition.

FIGS. **22**A-**22**D are enlarged views of portions of FIG. **21**.

DETAILED DESCRIPTION

For purposes of the description hereinafter, the terms "upper", "lower", "right", "left", "vertical", "horizontal", "top", "bottom", "lateral", "longitudinal", and derivatives thereof shall relate to the embodiments as it is oriented in the drawing figures. However, it is to be understood that the embodiments may assume alternative variations and step sequences, except where expressly specified to the contrary. It is also to be understood that the specific devices and processes illustrated in the attached drawings, and described in the following specification, are simply exemplary embodiments. Hence, specific dimensions and other physical characteristics related to the embodiments disclosed herein are not to be considered as limiting.

As used herein, the terms "communication" and "communicate" refer to the receipt or transfer of one or more signals, messages, commands, or other type of data. For one unit or component to be in communication with another unit or component means that the one unit or component is able to directly or indirectly receive data from and/or transmit data to the other unit or component. This can refer to a direct or indirect connection that may be wired and/or wireless in nature. Additionally, two units or components may be in communication with each other even though the data transmitted may be modified, processed, and/or routed between the first and second unit or component. For example, a first unit may be in communication with a second unit, even though the first unit passively receives data, and does not actively transmit data to the second unit. As another example, a first unit may be in communication with a second unit if an intermediary unit processes data from one unit and transmits processed data to the second unit. It will be appreciated that numerous other arrangements are possible. The components or units may be directly connected to each other or may be connected through one or more other devices or components. The various coupling components for the devices can include but are not limited to, the Internet, a wireless network, a conventional wire cable, an optical cable or connection through air, water or any other medium that conducts signals, and any other coupling device or medium.

One or more embodiments are drawn to diagnostic instruments, systems and methods of use thereof for testing of a patient fluid sample, which can be used either in clinical settings or for home use. More particularly, one or more embodiments relate to the performance of color-based reaction testing of biological material in an automatically calibrated environment. Some embodiments are implemented as a software application (an "App") running on a portable electronic device, such as a cell phone, tablet PC, computer, laptop, or other dedicated electronic device. The method has been designed to minimize user contact and manipulations of biologically soiled samples. Error prevention and compliance with medical instrument regulations have been implemented at all levels in the design of protocols. In particular the invented methods have been designed avoid modifying, compromising, and discarding raw data.

The diagnostic instrument is configured to provide rapid detection of patient conditions using test strips, such as reagent dipsticks. Dipsticks are typically narrow strips of

plastic or paper having certain reagents or antibodies that act as recognition elements to detect a given analyte or disease marker in a patient fluid sample. Often, the intensity of a color change of the test strip is an indication of the concentration of the analyte or disease marker in the patient fluid. Patient fluid may include a urine sample, blood sample, patient cells disposed in a fluid solution (e.g. cells obtained from a throat swab), semen, mucous, blood, saliva, and the like.

The diagnostic instrument is configured to test a patient fluid sample for a variety of diseases and patient conditions to increase the likelihood that a variety of conditions may be identified during a testing activity. Thus, the user will not need to select which test to perform or the order in which tests should be performed. In one non-limiting embodiment, the diagnostic instrument may test for pregnancy and pregnancy complications, such as preeclampsia.

With reference to FIG. **1**, and in one preferred and non-limiting embodiment, provided is a diagnostic instrument **10**, including a paddle **12** for holding at least one test strip **14**. The paddle **12** includes a handle **16** and a testing region **18** adapted to hold a plurality of test strips **14**. The testing region **18** includes a plurality of indentations **20** for holding at least one individual test strip **14**. The test strip **14** may be a reagent dipstick. In that case, each test strip **14** includes a plurality of test media, such as chemical test pads (CTP) **22**, containing a color-changing reagent for identifying the concentration of certain analytes in a patient fluid, such as urine, blood, or saliva. The user exposes the diagnostic instrument **10**, including the test strips **14**, to the fluid sample by dipping the instrument **10** into the patient fluid sample to submerge the test strips **14**. As is shown in FIG. **1**, more than one test strip **14** can be affixed to the paddle **12**, thus increasing the number of analytes that can be tested. In certain embodiments, the paddle **12** allows for testing of a number of analytes simultaneously.

A diagnostic instrument **10** which allows a user to test a signal fluid sample for a variety of patient conditions is intended to reduce user anxiety and to inspire confidence in individuals without medical training and with limited experience in performing medical tests. More particularly, the diagnostic instrument **10** tests for a plurality of patient conditions, meaning that the user does not need to select an appropriate test or determine which conditions are most likely to be present. Instead, in a single testing activity, the user tests for a plurality of conditions using a single fluid sample exposed to a single diagnostic instrument **10**. Furthermore, the diagnostic instrument **10** includes the paddle **12** and the handle **16**, making the diagnostic instrument **10** easies for a user to maneuver. Similarly, the handle **16** ensures that the user is protected from contacting the fluid sample during the test. Therefore, a user may confidently perform the test, using the diagnostic instrument **10**, without worrying that he or she will accidently contact patient fluid. Additionally, the diagnostic instrument **10** is intended to be provided with clear and easy-to-understand instructions for performing the test and interpreting the results, to ensure that the untrained user receive accurate diagnostic information from the tests that are being performed.

With continued reference to FIG. **1**, the diagnostic instrument further includes a color reference, such as a reference color bar (RCB) **28**, disposed on the diagnostic instrument **10**. The RCB **28** includes a plurality of color samples **29** in a side-by-side linear arrangement. For example, the RCB **28** may include color samples **29** for one or more of the following colors: Cyan, Magenta, Yellow, Key (black), Gray, White, Red, Green, Blue. The color sample **29** colors correspond with common color spaces, such as Red-Green-Blue, Cyan-Magenta-Yellow-Key (CMYK), pantone, Munsell, International Commission on Illumination (CIE) XYZ, or the International Color Consortium (ICC) device independent color space (L*a*b color space). The RCB **28** is used for image processing, specifically to calibrate a digital image of the diagnostic instrument **10** to improve the quality and accuracy of color analysis.

In certain preferred and non-limiting embodiments, the diagnostic instrument **10** further includes an identification label, such as a unique identification (UID) **24**. The UID may be a visual indicia serving as a landmark to identify a specific area of the diagnostic instrument. Additionally, the UID **24** may be configured to contain certain identification information about the diagnostic instrument **10**, such as a list of the analytes that are being tested, expiration date of the instrument **10**, the conditions that are being tested, and other identifying information. The information may be printed directly on or encrypted with the UID **24**, such as is the case with a label or two-dimensional bar code, such as a QR code. Alternatively, the UID **24** may be associated with information stored elsewhere (e.g., server accessible over the internet), such as is the case with bar codes for example. The identification information may be used in validation processes to ensure the diagnostic instrument **10** is suitable for the tests being performed and to ensure that it is safe to use, in good working condition, or to resolve other issues which may impact quality and reliability of the test results. It is noted that methods for automatically analyzing test strips in the prior art do not include these steps for validating the diagnostic instrument.

The diagnostic instrument **10** is configured so that a digital image of the instrument may be captured using a portable electronic device such as a smart phone. The diagnostic instrument **10** is easier to use than diagnostic instruments of the prior art, such as test strips disclosed in the '652 publication. Specifically, unlike previously known systems and methods, a user does not need to handle the used test strips, soiled by biological samples such as urine, blood, feces, etc., because the used diagnostic instrument does not need to be placed in side by side arrangement with an interpretation table, such as a manufacturer's interpretation color chart (MICC), when obtaining the digital image. Additionally, since the diagnostic instrument **10** does not need to be placed next to corresponding MICC, there is no possibility of using the wrong MICC for a particular diagnostic instrument (e.g. reading strips from manufacturer A with a MICC from manufacturer B).

Having described the structure of an embodiment of the diagnostic instrument **10**, a system **100** for performing diagnostic tests on a biological sample using the diagnostic instrument **10** will now be described.

With reference to FIG. **2**, a system **100** for performing diagnostic tests on a biological sample includes the diagnostic instrument **10** and a portable electronic device **110**. Generally, and in various preferred and non-limiting embodiments, the system **100** is used for acquiring, evaluating, analyzing, processing, and/or presenting image data of a diagnostic instrument **10** obtained by the portable electronic device **110**. The system **100** may be used in any type of medical analytical/diagnostic setting, including at a medical clinic, at an off-site laboratory, or home use without medical supervision. It should be understood that different aspects of the embodiments can be appreciated individually, collectively, or in combination with each other. In addition, image data may include any type or form of visual, video, and/or observable data, including, but not limited to, a

discrete image, a sequence of images, one or more images from a video, a video sequence, and the like.

The portable electronic device **110** could be any kind of smartphone (e.g., APPLE IPHONE, BLACKBERRY), handheld computer (e.g., APPLE IPAD), or any type of personal computer, network computer, workstation, minicomputer, mainframe or the like running any operating system, such as any version of ANDROID, LINUX, WINDOWS, WINDOWS NT, WINDOWS 2000, WINDOWS XP, MACOS, UNIX, SOLARIS, ARM OR IOS operating systems.

In certain non-limiting embodiments, the portable electronic device **110** includes a camera sensor **112**, for obtaining the digital image of the diagnostic instrument. Certain sensor array chips are presently available with varying properties, with CCD (Charge Coupled Device) and CMOS (Complementary Metal Oxide Conductor) representing the most common camera sensor chips. Each chip technology offers advantages and these evolve relatively with improving designs. In summary, a CCD offers a larger energy capture fraction and serial read-out with minimal local processing, whereas a CMOS has addressability and processing capability for each pixel, but with some loss of sensitivity. The portable electronic device **110** may further include a flash **114** for improving the quality and readability of images captured with the camera sensor **112**.

Hereinafter, the system **100** is described in terms of functional components and various processing steps. It is noted that the functional blocks may be realized by any number of hardware and/or software components configured to perform specified functions. In a preferred and non-limiting embodiment, the functional components and processing steps are associated with and/or performed using the portable electronic device **110**. For example, the embodiments may employ various integrated circuit components (e.g., memory elements, processing elements, logic elements, lookup tables, and the like), which may carry out a variety of functions under the control of one or more processors or other control devices. Similarly, the software components of the embodiments may be implemented with any programming or scripting languages such as C, C #, C++, JAVA, assembler, extensible markup language (XML), or extensible style sheet transformations (XSLT). The various algorithms may be implemented with any combination of data structures, objects, processes, routines, or other programming elements.

With continued reference to FIG. **2**, in one non-limiting embodiment, it is envisioned that the functional components and processing steps will be included with and/or performed using the portable electronic device **110**. In that case, the portable electronic device **110** includes a processor **116** configured to execute program instructions stored on computer-readable media **118** associated with the portable electronic device **110**. For purposes of the present discussion, computer-readable media **118** may include computer storage media, such as media implemented in any method or technology for storage of information, such as computer-readable instructions, data structures, program modules, or other data, random access memory (RAM), read only memory (ROM), electrically erasable programmable read only memory (EEPROM), flash memory, or other memory technology, CD-ROM, digital versatile disks (DVDs), or other optical disk storage, magnetic cassettes, magnetic tape, magnetic disk storage, or other magnetic storage devices, or any other medium which can be used to store the desired information and which can be accessed by an electronic device, such as portable electronic device **110**.

In certain non-limiting embodiments of the program, the processor **116** controls a digital image analyzer **120** for identifying regions of a digital image containing relevant data, color correcting the digital image, and comparing the corrected portions of the digital image to table entries of the MICC to determine test results. The processor **116** may further control a reference tag reader **122** configured to identify and extract information from a UID **24** affixed to or associated with the diagnostic instrument **10**. The processor **116** may further control a display **122**, connected to or associated with the portable electronic device **110**, for presenting information such as instructions for using the diagnostic instrument and test results to a user. The processor **116** may also control a timer **124** for measuring the time between when the diagnostic instrument **10** is exposed to a fluid sample and when the digital image of the diagnostic instrument **10** is captured. Additionally, in certain embodiments, the processor **116** controls a data entry device **126** allowing a user to enter additional information, including patient history information, symptoms, and physical characteristics of the user. The data entry device **126** may include any input device or user interface as is known in the art, which allows a user to control an electronic device including, but not limited to, gestures on a touch-screen or any other actions that cause a change in readings obtained from sensors, keypad presses, and the like.

In addition to storing the program for controlling functions of the portable electronic device **110**, the computer-readable media **118** may also store data including a plurality of MICC tables used to determine test results. The computer readable media **118** may also store raw or pre-processed images obtained by the camera sensor **112**, decision trees for determining a patient condition, and other input data necessary for executing functions of the program. Additionally, the computer-readable media **118** may include communications media, such as computer-readable instructions, data structures, program modules, or other data in other transport mechanisms and include any information delivery media, wired media (such as a wired network and a direct-wired connection), and wireless media. Computer-readable media may include all machine-readable media with the sole exception of transitory, propagating signals. Of course, combinations of any of the above should also be included within the scope of computer-readable media.

Additionally, it is to be recognized that some or all of the functions, aspects, features, and instances of the embodiments may be implemented on a variety of computing devices and systems, wherein these computing devices include the appropriate processing mechanisms and computer-readable media for storing and executing computer-readable instructions, such as programming instructions, code, and the like. The functional aspects of a software application (App) for directing the function of a portable electronic device will be discussed in greater detail in connection with methods for using the diagnostic instrument to identify a patient condition and methods of image processing of a digital image of the diagnostic instrument.

In a further non-limiting embodiment, the system **100** includes a data transmitter **128** for transmission of data and information from the portable electronic device **110** to an external electronic device, a computer network, and/or a digital storage device, collectively referred to as a network environment **130**, known colloquially as "the cloud". Once the data is provided to the network environment **130**, it may be made available to interested third parties **132**, including caregivers, doctors, third party payment organizations,

insurance and health maintenance organizations, pharmacists, or public health organizations.

Having described the diagnostic instrument **10** and a system including the diagnostic instrument **10** and the portable electronic device **110**, methods for using the diagnostic instrument and obtaining test results will now be discussed in further detail.

Initially, as depicted in FIG. **3**, a method for obtaining a digital image of the diagnostic instrument is depicted. A user begins by installing the software program configured to acquire and analyze a digital image of the diagnostic instrument on a portable electronic device. Once the software program is installed, the user initiates the program **210**, by an active activation means such as by pressing a "Begin" button on the display screen of the portable electronic device. Alternatively, the program **210** may be automatically activated. The user then exposes **212** the diagnostic instrument to a biological sample, which exposes the plurality of CTP to analytes contained in the sample and begins a chemical reaction between the CTP and analytes. In certain embodiments, a timer is started when the diagnostic instrument is exposed to the sample. After a predetermined time passes, the portable electronic device prompts the user to capture the digital image of the diagnostic instrument. The timing when the digital image is captured is critical because colors of the CTP continue to change over time. Therefore, missing this acquisition window may void any test results from the diagnostic instrument. Alternatively, additional calculations may be performed to compensate for the incorrect exposure time.

The user captures **214** the digital image of the diagnostic instrument **10** using the camera sensor of the portable electronic device. In certain embodiments, the portable electronic device may provide instructions for obtaining the digital image, such as by suggesting a preferred camera position or lighting environment. For example, in certain embodiments, when preparing to capture the digital image of the diagnostic instrument, the user interface superimposes a virtual contour of the diagnostic instrument onto the real image acquired by the camera sensor in video mode. The user is then asked to overlay the virtual contour with the image of the diagnostic instrument and to take the picture precisely when indicated by the timer. When the user triggers the camera shutter, the camera is configured to switch from video to a high resolution mode to capture a high resolution single frame image of the diagnostic instrument. The captured digital image includes at least a portion of the RCB, the CTP, and/or the UID of the diagnostic instrument. More particularly, a high definition image of the diagnostic instrument is captured preferably under flash or other standardized illumination conditions (if available) so as to provide the most reproducible lighting conditions.

In certain non-limiting embodiments and with reference to FIG. **4**, once the digital image of the diagnostic instrument is obtained, the portable electronic device may be used to validate **216** the diagnostic instrument. Specifically, an optical reader (e.g. bar code, matrix bar code reader, two-dimensional bar code reader, or a QR code reader), associated with the portable electronic device, is used to scan the captured digital image to locate the UID. The UID includes or corresponds to information about the diagnostic instrument being tested. The software is configured to ensure that the diagnostic instrument is safe for use and suitable for a specific application, based on the identification information from the UID. Additionally, the UID validation step may include using the identification information from the UID to select the correct MICC, from available options stored on the portable electronic device, for use in analyzing the results of the diagnostic instrument being tested.

Following the validation step **216**, geometric corrections are performed **218** to determine the position of the other elements, namely the RCB and CTP, of the diagnostic instrument based on the position and orientation of the UID. Geometric corrections compensate for a large range of user positioning and attitude errors, which may occur as the user holds the instrument to capture the digital image. The geographic corrections may be defined in terms of pitch, roll, and yaw angles of the diagnostic instrument in the digital image. Based on the geometric correction, the position of the RCB and CTP can be effectively identified. The method further includes applying local image corrections to the identified portions of the digital image including the RCB or CTP, such as analyzing the digital image to apply spatial guard bands around and just within the boundary of each identified area.

With continued reference to FIG. **4**, after the digital image is obtained and the geometric corrections performed, the digital image is processed to remove image noise and to correct image coloration **220**. It is noted that all of the operations, corrections, calculations, and modifications are performed on a stored copy of the high-definition image. In this way, the raw image is separately maintained and can be used for later analysis, if necessary. More specifically, the color correction process corrects colors of the portion of a copy of the captured image including the CTP, based on the calibration measurements and correction offset determined from analysis of the portion of the digital image including the RCB.

Once the portions of the digital image including the CTP are color corrected, the corrected colors can be compared **222** with color samples from the MICC. As is described in greater detail below, comparison between the CTP color change and the MICC is based on an interpolation process. The MICC is a table depicting a plurality of possible results (e.g. color samples) for one or more of the CTP on the diagnostic instrument. An exemplary MICC **150** for use with a standard test strip is depicted in FIG. **5**. The MICC **150** includes a plurality of color samples **152** corresponding to the range of possible color changes of the CTP being tested. The various color samples correspond to CTP color change over a range of analyte concentrations or titration level (e.g. absent, normal, positive, very positive . . .). The MICC **150** is typically provided by the manufacturer of the test strip being tested. With continued reference to FIG. **4**, based on the comparison between the corrected CTP color and the MICC color samples, the test results (e.g. concentration or titration level) can be determined **224**.

Another way of calibrating such color trajectories would be to generate an absolute calibration curve comprising numerous points (5, 6, 7 to 20, 30, 40 preferably 12) made of the absolute color measurements obtained at known analyte concentrations. This is done for every CTP. This generates an absolute color curve (ACC) for a CTP associated with an analyte, such as shown by the color trajectory line **424** in FIG. **10**, for example, or the interpolated color trajectory **428** shown in FIG. **20**, for example. The continuous color trajectories enable quantitative measurements instead of bracketed measurements. The absolute color curve (ACC) may be simply referred to herein as a color trajectory.

For certain embodiments, the predetermined manufacturer's interpretation color chart values and the absolute color curve values (MICC/ACC) are also used to provide confirmation that the diagnostic instrument provides valid results

and is suitable for use. More particularly, the MICC/ACC represents the range of possible color changes for the CTP. If the color of the identified region does not correspond to a possible test result color, it is assumed that either the wrong MICC/ACC was used to analyze the test results or that the diagnostic instrument was defective. Accordingly, any results falling outside of the color range defined by the MICC/ACC are discarded.

Referring to FIG. **19**A, another embodiment extends and generalizes the approach described in FIG. **4** towards use in a larger range of lighting conditions, such as from dim light (about 50 lux) to office lighting (about 500 lux) to studio light (around 1000-1500 lux), for example.

In FIG. **19**A, the method begins with step **2900**A and continues with the workflow through steps **216**, **218** and **220**, as was explained with reference to FIG. **4**. The process then performs additional steps **2911** and **2912** and then continues through steps **224** and **226**, as was explained with reference to FIG. **4**.

At step **2911**, an estimate of the relative lighting conditions of the reference color bar (RCB) is made. There are a number of methods described in the literature to determine lighting conditions, often relying on parameters of: (i) the luminance L, (illuminance) and/or (ii) the irradiance Ir (radiance).

Luminance L of a reference color bar (RCB) can be calculated by the linear CIE 1931 luminance for ITU-R BT.709 primaries, using the luminance equation $L=0.2126R+0.7152G+0.0722B$, where R, G, B are the camera perceived colors of elements of the RCB. The irradiance Ir of the reference color bar (RCB) can be calculated by the equation $Ir=(R+2G+B)/4$, where R, G, B are the camera perceived red, green, and blue colors of elements of the RCB. The value for luminance L and the value for irradiance Ir can be gamma compensated or not. Luminance estimations may combine the values of luminance L and irradiance Ir into a linear or non-linear function. Values for luminance L and irradiance Ir can be obtained by exposing the RCB to various lighting conditions. Exemplary equations to combine values of luminance L and irradiance Ir to estimate lighting conditions include but are not limited to: gamma differences, linear differences, gamma irradiance differences, linear irradiance differences between black and white RCB elements. In addition, the use of a photometer in a camera, if available, or use of photographic parameters like speed, aperture, and file sensitivity, if available, may also be used to estimate the lighting conditions under which the image for an RCB and a CTP are captured.

At step **2912**, with portions of the digital image including the CTP being color corrected previously at step **220**, the corrected colors of the CTP can be compared with color samples. The color samples are predetermined from chemical experiments performed with the CTP under known luminance L recreating a complete MICC/ACC under such lighting conditions.

At step **224**, results and titration of the CTP are performed in the same manner as was described with reference to FIG. **4**, followed by an interpretation step **226**. The workflow then goes to process **2999** to either end or continuing to analyze other CTPs that have yet to be analyzed.

Referring now to FIG. **19**B, another method can be used to extend and generalize the method of color quantification for use over a range of different lighting conditions. An image of the CTP and RCB may be captured from dim lighting (about 50 lux) to office lighting (about 500 lux) to studio lighting (around 1000-1500 lux), for example.

In FIG. **19**B, the method starts with step **2900**B and continues the workflow through steps **216**, **218** and **220**, as was explained with reference to FIG. **4**. Steps **2921** (parallel comparisons **2921**A-**2921**N) and **2922** are then performed. The workflow then continues with steps **224** and **226** as was explained with reference to FIG. **4**.

At step **2921**, evaluations **2921**A-**2921**N of several lighting conditions L1 through Ln in parallel are made. The RGB color of the CTP is compared against a plurality of reference MICC/ACCs under the plurality of lighting conditions L1 through Ln. For each color trajectory in each luminance of lighting conditions L1 through Ln, a tube of confidence determines the level of confidence of a given measure.

At step **2922**, the measure falling within one of the tubes of confidence is deemed a valid measure and is selected as the result of comparison. In case of overlapping tubes there are several valid results which are refined by a result decision making algorithm. Some examples of a result decision making algorithms are: (i) use the trajectory nearest to the point, (ii) use of a linear combination of trajectories according to topology (e.g. weighted combination of multiple trajectory results according to proximity to trajectory), (iii) use of a statistical combination of trajectories (averages and variances to trajectories), (iv) non-linear functions, and (v) votes. The embodiments are not limited to these result decision making algorithms. For example a simple embodiment of a statistical combination is an average between valid results.

At step **224**, results and titration of the CTP are performed as was described with reference to FIG. **4** and followed by the interpretation step **226** as was described with reference to FIG. **4**.

At step **226**, the test results for an individual CTP can be interpreted either individually or in combination with other test results and diagnostic information to determine a patient condition. For example, multiple test results that indicate the presence or absence of a number of different analytes in the biological fluid sample. These multiple test results can be considered in combination to determine a probable patient condition.

Similarly, if the test results suggest a plurality of possible patient conditions, the method may further include asking the user patient various diagnostic questions to rule out certain possible conditions to arrive at a most likely patient condition. In certain embodiments, the test results and/or patient condition information are presented to a user on a visual display device of the portable electronic device. If all the CTPs have been considered and the results interpreted, the process may end at step **2999**.

Having generally described methods for using the diagnostic instrument, capturing a digital image of the diagnostic instrument, and for determining test results using a portable electronic device, the various processes, algorithms, and methods for analyzing the digital image will now be described in greater detail. It is understood that the processes described below are intended only as exemplary processes and methods for analyzing a digital image of a diagnostic instrument, and are not intended to limit the scope of the embodiments in any way. Furthermore, it is understood that the described processes may be implemented using the portable electronic device or other computers and processing apparatus as are known in the art.

Validation of the Diagnostic Instrument Based on the UID

As shown in FIG. **4**, a non-limiting embodiment of the method includes the step of validating **216** the UID to ensure that the diagnostic instrument is suitable for the test being performed. The validation step requires determining the

position of the UID on the digital image of the diagnostic instrument. To determine the UID position, the digital image may be scanned using a digital reader or similar image processing algorithm or device. The scanning function may also be used to ensure that the whole diagnostic instrument is acceptably in focus in the digital image. If the digital image is not properly focused, the user may be asked to obtain a replacement image of the diagnostic instrument.

The UID may be implemented as a matrix or two-dimensional bar code, such as a QR code. In other embodiments, the UID is a bar code or near-field communication tag. The UID includes or is associated with certain identifying information about the diagnostic instrument, including the manufacture date of the diagnostic instrument, the expiration date of the diagnostic instrument, the analytes tested for by the instrument, identifying information about the test subject, or patient condition information. For QR codes and similar visual indicia, the identifying information is embedded expressly on the UID itself. The embedded information can be encrypted using various encryption security mechanisms, as are known in the art. Alternatively, the information on the UID may direct the electronic device or digital reader to information stored on an external device. The UID is read according to standard algorithms that are well known in the art. Optionally, the information about the diagnostic instrument contained on the UID may be used to compare the diagnostic instrument with other available testing instruments to ensure that the diagnostic instrument is compatible with software and hardware of the portable electronic device and is the most suitable testing device available for a given application.

Additionally, the validation operation **216** may be used to ensure that the device was legally obtained and was not tampered with during shipping to a user. For example, the UID may contain information about the manufacturer, source, and traceability (e.g. point of origin of the diagnostic instrument and any third parties that have handled the instrument since it was manufactured) of the diagnostic instrument. If any of the identifying information is suspect or incorrect, the diagnostic instrument may be rejected and the user informed that the diagnostic test cannot be performed. Such validation actions prevent rogue and/or unsafe products from being used, such as products that were sold illegally or were acquired from unlicensed third parties.

Perform Geometric Corrections to Identify CTP and RCB

The method further includes performing geometric corrections **218** on the digital image, taking into account the geometric deformations of the initial image to find the proper CTP and RCB sub-images of the CTP and RCB. The process takes into account the geometric deformations of the initial image to find the proper CTP and RCB sub-images, which are subsequently cropped, as precisely as possible, to remove any edge artifacts from the identified regions of the digital image, leaving only the individual colored areas of the CTP and RCB for further analysis.

When preparing to take pictures, the user interface superimposes a virtual contour of the paddle onto the real image acquired by the camera in video mode prior to single frame acquisition in high resolution camera mode. The user is asked to overlay the virtual contour with the image of the paddle and to take the picture precisely when indicated by the timer in the application.

When the user triggers the camera shutter, the camera switches from video to high resolution mode to capture the best possible image of the paddle, improving the precision of the method described in this patent application.

Specifically, the geometric corrections are based on the position of the UID in the digital image. Initially, the position of the UID is identified by scanning the digital image, as is described above in connection with the validation process. With reference to FIGS. **6**A-**6**D, in certain embodiments of the method, four UID **24** points A, B, C, D are identified on the corners of the UID **24** to form a square of known dimensions that encloses the UID **24**. Based on the orientation of the UID **24** in the digital image, the vertical (X-scale) and horizontal (Y-scale) scales, as well as, scale factors, including the yaw, pitch, and roll, of the diagnostic instrument **10** are calculated. Based on the calculated position of the UID **24** and scale factors, a theoretic location of the CTP **22** and the RCB **28** can be calculated. The calculated theoretic positions are identified on the digital image. Identification of the CTP and RCB allows for extraction of CTP and RCB sub-images from the digital image of the diagnostic instrument **10**. The calculations required to determine the theoretic locations are described herein. Notations used in the following are:

$$A(x,y)=Ax,Ay$$

$$Ti(x,y)=Tix,Tiy$$

With reference to FIG. **6**B, the yaw angle (rotation around Z axis) is directly measured in the image by:

$$\text{yawAngle}=a\tan((Ay-Dy)/(Ax-Dx))$$

and the positions are corrected through a rotation around point A, creating a new referential X' and Y'.

With reference to FIG. **6**C, the pitch angle (rotation around Y axis) is approximated by the difference of length between AB and DC projections on axis Y'.

$$\text{Pitch approximation}=\text{abs}(Dy-Cy)/\text{abs}(Ay-By)$$

$$\text{Pitch correction}=(\text{abs}(Dy-Cy)/\text{abs}(Ay-By))\text{^}3,$$

With reference to FIG. **6**D, the roll angle (rotation around X axis) is approximated by the angle between axis Y' and AB or DC segments

$$\text{DCAngle}=a\tan((Cx-Dx)/(Cy-Dy));$$

The composite correction for both roll and yaw is calculated as:

$$\text{AngFact}=\sin(\text{DCAngle})+\sin(\text{yawAngle});$$

The coordinates of the CTP **22** are calculated by applying the following corrections to points T1 . . . Tn defined in FIG. **6**A to obtain its transformation TA.

$$TAy=\text{round}(Tiy*Yscale);$$

$$TAx=\text{round}(Tix*Xscale-\text{AngFact}*TAy);$$

The coordinates of the RCB **28** can be calculated using the same equations, thereby providing a theoretic location of the RCB **28** on the digital image.

Removing CTP Noise and CTP Color Correction

With continued reference to FIG. **4**, the CTP image identified by the geometric calculations may not be perfect for various reasons. Therefore, once the CTP and RCB sub-images are identified and extracted by the geometric corrections, processes are implemented to remove CTP noise and to correct the colors **220** of the digital image to accurately reflect the coloration under standard lighting conditions. It is understood, however, that the calculated theoretic positions of the CTP and RCB, and resulting extracted sub-images, may not be accurate and align exactly with the RCP and CTP, for a variety of reasons. With

reference to FIGS. **7**A-**7**C, background artifacts **312**, from the housing of the diagnostic instrument **10**, may incorrectly be included within the CTP sub-image **310** identified by the geometric correction calculations, described above. The background artifacts **312** are adjacent to or surround the actual CTP image **314**. As shown in FIG. **7**A, background artifacts **312** are present at the left and top of the CTP sub-image **310**. FIG. **7**B has a large inclusion of a background artifact **312** on top and a second background artifact **316** to the right of the actual CTP image **314**. FIG. **7**C includes a smaller marginal background artifact **312** surrounding the actual CTP region **314**. The background artifacts **312**, **316** may be removed by applying a local image correction, in which spatial guard bands are placed around and just within the boundary of the actual CTP image **314**. Background artifacts **312**, **314** outside of the region enclosed by the guard bands are removed from the CTP sub-image. The more uniform color patch (e.g. the actual CTP image **314**) within the guard band is then filtered and optimized to improve image quality.

With reference to FIG. **8**, due to the length and inclination of the RCB sub-image **318** extracted from the digital image of the diagnostic instrument **10**, the RCB **28** is also typically not accurately identified by the geometric correction calculations. For example, the RCB sub-image **318** may include background lines **320** of noise on top and bottom of the actual RCB image **322**, as shown in FIG. **8**. Accordingly, an additional step of removing the background lines **320** from the sub-image **318** to accurately identify the RCB **28** is required. This operation is performed by applying a variance operator line by line over the RCB sub-image **318**. A longitudinal line across the RCB sub-image **318** with a low variance is not part of the RCB **28** and can be deleted. However, lines running across the actual RCB image **322** would have a high and well known variance. Thus, such high variance lines are not filtered out and are presumed to capture the actual RCB image **322**.

Additional image imperfections including noise from the camera sensor, artifacts caused by changing lighting conditions, imperfections of the samples themselves, variations in the CTP chemical reactions, or any combination thereof may also be present in the actual CTP and RCB images **314**, **322**, even after the background artifacts **312**, **316** and background lines **320** are removed. These imperfects may be removed by filtering and color correction. However, the challenge in filtering noise in medical applications is to avoid tampering with the raw data. This is particularly true in the color space where classic signal processing methods, such as linear filtering, might contaminate or distort samples and create questionable results. For example, a single red pixel averaged over a white area introduces low level pink that that could be misinterpreted as a test result. The Nitrite CTP is a good example where the slightest detection of pink corresponds to a positive result. Therefore, the filtering method is based on a sorting operation that does not modify the raw data and does not introduce colors into existing points, even at infinitesimal levels. Additionally, the quality of the identified CTP region is further improved by conditionally rejecting anomalous color points, which fall far outside of the nominally uniform color across the test panel. Such conditional rejection of outlier points presents a significant improvement in reducing error without altering raw data.

In view of these challenges, in one embodiment, a median filter, such as median filters available for use with MATLAB data analysis software, developed by MathWorks, Inc., can be applied to the actual CTP and RCB images **314**, **320** after the background artifacts are removed. Median filters have the advantage of reducing pollution of CTP and RCB by border points not already rejected by the guard bands, providing an elegant solution to an optimal value without modifying the raw data. Applying a median filter to the actual CTP and RCB images (e.g. the camera captured CTP and RCB images) provides a dominant camera-captured CTP color and a dominant camera-captured RCB color. More specifically, the median filter is applied in a line wise direction and then in a column wise direction.

Due to potential variability in lighting conditions under which the digital image is captured, the camera-captured CTP color must be color corrected prior to comparison with the MICC to calibrate the digital image to the MICC/ACC color space. It is noted that since the digital image of the diagnostic instrument captures both the RCB and CTP under the same lighting conditions, the digital image of the RCB reflects the same noise and bias conditions as the CTP. Therefore, the RCB can serve as a calibration reference to color correct the color averaged CTP value.

In one embodiment, a color correction value is determined by identifying a white color sample of the RCB. A color correction factor is determined by identifying any colors, other than white, present in the camera-captured white color sample of the RCB. The correction factor is applied to the camera-captured CTP color using a white balancing algorithm, as is known in the art. For example, white balancing algorithms for use in MATLAB by Jeny Rajan, available at https://sites.google.com/site/jenyrajan/, may be used in connection with the color correction factor. White balancing algorithms are effective for color correcting red, green, blue images, such as the digital image of the diagnostic instrument.

Alternatively, and in a preferred and non-limiting embodiment, a color correction algorithm uses additional reference samples from the RCB to calculate both a black and white correction factor and a color correction factor for the digital image. Inherent to the invented method, the colors of each of the squares in the RCB (Cyan, Magenta, Yellow, Key (black), Gray, White, Red, Green, and Blue) are known under standard lighting (e.g., lighting standard D65) conditions. The color values for the RCB under standard lighting conditions are referred to as the ReferenceRCB (RefRCB) values. These known standard color values are compared to values obtained from the actual RCB image **322**, referred to as the camera-captured RCB (CCRCB), acquired according the process described above. Having two data sets, the CCRCB and the RefRCB, it is possible to construct an inverse matrix that transforms the CCRCB into RefRCB. An example of a solution for deriving the inverse matrix and for correcting the color of the CTP based on the derived inverse matrix, includes the following:

1. Correct the image by adjusting the luminance of the squares with the gamma factor

$$L_{out}=A\cdot L_{out}^{gamma}$$

This is for B&W luminance, which represents the bulk of the correction.

2. Correct the RGB bias by balancing the three colors with another gamma factor.

$$a_{out}\times B\cdot a_{out}^{gamma1}$$

This is for color adjustments, typically a and b and Lab.

3. Use CMY values for validation.

Once the Gamma factors (A, gamma, B, gamma1) are derived, the correction is applied to the dominant camera-captured CTP color to bring the CTP color into the MICC/ACC color space.

A schematic representation of the above described color correction process is depicted in FIG. **9**. As shown in FIG. **9**, the digital image of the diagnostic instrument **10** including the CTP **22** and RCB **28** is obtained using a camera **410** of the portable electronic device under real or unknown lighting conditions. This is the CCRCB. The digital image of the RCB **28** is compared to known color values for the RCB **28** obtained under standard or ideal lighting conditions using a spectrophotometer **412**. This image is referred to as the RefRCB. The comparison between the CCRCB and RefRCB is used to create an inverse matrix **414** for mapping the CCRCB onto the RefRCB. The inverse matrix **414** is applied to the camera-captured CTP color to transform the camera captured CTP color into a color in the same color space as the MICC/ACC **416**. Once the CTP is transformed to obtain a color corrected CTP color **418**, the color corrected CTP can be compared with the appropriate MICC/ACC **416** since both colors are presented in the same color space. In this way, the digital image of the diagnostic instrument is effectively calibrated with the MICC/ACC **416**, even though the digital image was obtained under real or unknown lighting conditions.

Compare CTP to their Corresponding MICC/ACC

The MICC/ACC for a number of different types of CTP arrangements may be stored on computer-readable media included on or associated with the portable electronic device. With reference to FIG. **4**, when the method validates the UID at step **216**, it also selects the corresponding MICC/ACC to interpret the paddle. More specifically, the validation process uses the identification information included on the UID of the diagnostic instrument being tested to select the correct MICC/ACC to interpret results of a specific test. The validation process effectively prevents a user from using the wrong diagnostic instrument or incorrect MICC/ACC, even when several families of diagnostic instrument products have a similar appearance or CTP arrangement. The color corrected CTP color is compared with color values from the corresponding MICC/ACC to determine the analyte concentration of the sample solution. The measured color is compared to the MICC/ACC values by an interpolation process.

Interpolation of test results using the MICC/ACC can be performed in at least two ways. With reference to FIGS. **10** and **11**, the first and simplest method, which is employed in imaging processes employed in the prior art, is assessment of the distance in the color space between the color corrected CTP color and MICC/ACC values. A schematic drawing depicting such interpolation is depicted in FIGS. **10** and **11**. As shown in FIG. **10**, the MICC/ACC **416** for a particular CTP (e.g., a set **418** of a plurality of color samples **430** or color values representing the color change for various analyte concentrations of a given analyte) is represented in the RGB color space **420** as a series of discrete points **422**. The points **422** in the color space correspond to the set **418** of color samples **430** of the MICC/ACC **416** for a given analyte.

As shown in FIG. **10**, the discrete points **422** are connected together to form a solid color trajectory line **424**. Other color trajectory lines are shown in FIG. **10** with different points. The other color trajectory lines represent other sets of color samples **430** and the MICC/ACC **416** for CTPs with different analytes.

With reference to FIG. **11**, the color corrected CTP color **426** is also included in the color space **420**. The method calculates the distance D between the color corrected CTP color **426** and each of the discrete points **422**. The nearest discrete point **422** is thereby identified. The test result for the CTP color is reported as the analyte concentration of the closet discrete point.

With reference to FIGS. **12**A and **12**B, a second preferred method, introduces an additional metric by using the shortest distance dh between the color corrected CTP color **426** and an interpolated color trajectory **428** derived from the discrete points **422**. The distance dh may be used in two simultaneous ways. First, a color trajectory function may be derived by, applying polynomial interpolation. The shortest perpendicular distance dh between the color corrected. CTP color **426** and the interpolated color trajectory **428** is used to calculate the predicted concentration. Secondly, if the length dh of the perpendicular to the interpolated color trajectory **428** is larger than a predetermined value, then the measurement is rejected as suspect. Conversely, if dh is less than a given predetermined value, the measurement may be assumed to be trustworthy.

Referring now to FIG. **12**B, the determination of concentration may be further refined by proportional interpolation between the two closest discrete points **422** to the color corrected CTP **426** to further improve quantitative accuracy, using known algorithms. In an alternative embodiment, the perpendicular distance de between the color corrected CTP color **426** and a trajectory line **425** connecting the discrete points **422**, defined as the chord **425** between the discrete points **422**, also yields a valuable and simplified method for calculating concentration from the measured color.

In either case, the color corrected portion of the digital image including the CTP is proportionally mapped on to the precisely interpolated polynomial, or chordal, fit in the chosen color space (e.g., the red-green-blue (RGB, International Commission on Illumination (CIE) XYZ, or the International Color Consortium (ICC) device independent color space (L*a*b color space)) color space). Although the discussion herein often refers to the RGB color space, it will be appreciated by those well versed in the art that any color space may be used (e.g., CMYK, CIE, Pantone, Munsell, etc.).

Beneficially above method is quite tolerant of nonlinearities, and does not require a unitary relationship with any human visual properties, making its numerical value and interpretation independent of the color vision of the observer, ambient lighting when the digital image was taken, residual metamerism, or indeed most commonly encountered errors, for which calibration and compensation did not formerly exist.

Once a plurality of analyte concentrations are calculated, the test results may be provided to a user. Additionally, the complete set of test results may be interpreted in combination as a medically-coherent set, to more specifically determine a patient condition.

Compare a CTP to an Experimentally Built MICC/ACC in Single Lighting Lab Conditions

MICC charts provided by manufacturers are printed for color recognition through the human eye in controlled lighting environments. For example, the single lighting lab condition may be at an luminance of 1600 lux. Because the color recognition is through the human eye and under a single lab lighting condition, these charts are not well suited to machine recognition. Additionally, the printing process reduces significantly their gamut and the perceived result depends also on the paper quality, paper gloss, ink gloss as well as the light used to observe the scene.

New MICC/ACC charts are established experimentally under controlled lighting conditions, such as luminances of 60 lux, 160 lux, 260 lux, 550 lux, and 1600 lux, using a color

camera. These charts are built on lab-based chemical experiments. Chemical test pads, such as CTPs **22** of the test strip **14** shown in FIG. **1** for example, are dipped for a constant time into known control solutions triggering those CTPs to develop colors during a controlled time period. The pictures of these CTPs are then captured by a camera, stored in an experimental MICC/ACC chart database and used in the color recognition of exposed CTPs with unknown concentrations. These new MICC/ACC absolute values provide measurement points directly in red-green-blue (RGB) colors for each CTP titration. Together these points form a trajectory that the CTPs follow in the color space when covering their nominal range of titration for an analyte. Different colors of a given CTP representing different titrations or concentrations of an analyte in an MICC/ACC chart may be used for comparison to determine an unknown concentration in a biological sample.

FIG. **20** illustrates an example of an experimentally built MICC/ACC chart **418** of a plurality of color samples for a protein with titrations from left to right of 0, 17, 30, 100, 300, 2000 milligrams per deciliter (mg/dl). The plurality of color samples provide corresponding points (from right to left) in the RGB color space **420** representing protein titration levels (PRO) under one of the known controlled lighting conditions (e.g., 60 lux, 160 lux, 260 lux, 550 lux, or 1600 lux). For example, a color sample **450** of the CTP for the titration of 30 mg/dl is reported in the RGB space **420** as point **451** (PRO 30). The collection of protein titrations of 0, 17, 30, 100, 300, 2000 mg/dl generates a plurality of trajectory points (PRO 0, PRO 17, PRO 30, PRO 100, PRO 300, PRO 2000) in the RGB space **420**. The trajectory points are approximated by a polynomial interpolation to generate a continuous analytical function mapping trajectory **428**, referred to as a measured color trajectory **428**, under one of the known controlled lighting conditions (e.g., 60 lux, 160 lux, 260 lux, 550 lux, or 1600 lux).

Several noise reduction techniques known in the art can be used to increase the precision of such trajectories, as well as to estimate a degree of confidence in the trajectory **428**. Experiments have been reproduced several dozen times to statistically evaluate their precision through their average and variance, and to reduce their noise to a level compatible with the color interpretation application of the CTP. The noise is estimated for each point of the continuous trajectory such that it can vary from point to point along the color trajectory **428**. The estimated noise for each point on the trajectory can be represented as a generalized tube of confidence T centered around the trajectory **428**.

When working in recognition mode, comparing a captured color corrected RGB color of a CTP with unknown titration to the continuous trajectory **428** for one of the known controlled lighting conditions, the method calculates the shortest Euclidian distance dh in the RGB color space between the trajectory **428** and the color corrected CTP measurement with unknown titration. The point on the trajectory **428** at the shortest Euclidian distance dh from the point of the color corrected CTP measurement, represents the titration measurement for a given analyte associated with the CTP.

In accordance with an embodiment, a simple method to evaluate the quality of the titration measurement is implemented. It is expected that the shortest Euclidian distance dh between the measured point and the trajectory **428** of known controlled lighting conditions (e.g., lux, 160 lux, 260 lux, 550 lux, or 1600 lux) may not be zero due to noise. The noise adds variance to the captured color. As mentioned previously, experiments have provided an estimated noise for each point on the trajectory that can be represented as a generalized tube of confidence T centered around the trajectory **428**. The radius and diameter of the tube of confidence T varies along the measured points and the color trajectory curve **428**. If the shortest Euclidian distance dh is within the generalized tube of confidence T, the measurement is accepted because it is within a statistically acceptable variance around the color trajectory. If the shortest Euclidian distance dh is outside the tube of confidence T, it is outside the acceptable variance and is rejected.

Referring now to FIG. **22**A, it is desirable to simplify the determination if the Euclidian distance dh is within or outside the tube of confidence T. The tube of confidence T can be represented by a series of spheres **2461**A-**2461**N with center points along the measured points associated with the color trajectory curve **428**. Each of the spheres **2461**A-**2461**N has a radius at a given point equal to the radius of the tube of confidence tube that represents the confidence level at that given point. The radius of the tube of confidence at a given point along the color trajectory curve can be determined by projecting radius of the tube of confidence into a vector in the red dimension of RGB color space (tube radius, 0, 0) from the given point. For example, the sphere **2461**A has a single color vector **2462**A in the red dimension (tube radius, 0, only from the point PRO 2000.

The tube radius at the point PRO 2000 represents the confidence of a measurement that projects its Euclidean distance near the point PRO 2000. Accordingly, the tube radius from the point on the curve may be compared with the shortest Euclidian distance dh to determine if a measured point is within or outside the tube of confidence.

The series of single color vectors in the red dimension for each of the measured points along the color trajectory curve may be graphically represented in FIG. **22**A by a ribbon **2450**A adjacent the color trajectory curve. If the ribbon **2450**A were to be spun around the color trajectory curve **461**, the tube of confidence T would be formed. The values for radius along the color trajectory can be extrapolated to form a confidence curve **2460**A at the edge of the ribbon **2450**A.

The radius of the tube of confidence can be used to define a diameter (twice the radius) around the color trajectory curve **461** under which measurements can be accepted and rejected. Measurements outside the diameter defined by the confidence curve **2460**A and the ribbon **2450**A are outside the acceptable variance and are rejected. Measurements on and within the diameter defined by confidence curve **2460**A and the ribbon **2450**A are within the acceptable variance and are accepted measurements. If the measurement is accepted, the titration can then be determined.

With reference to FIG. **20**, the general tube of confidence can be applied to a single measured color trajectory **428**. However, color measurements of a CTP are often captured under different lighting conditions. Accordingly, multiple measured color trajectories of an MICC/ACC may be captured under a plurality of known controlled lighting conditions (e.g., 60 lux, 160 lux, 260 lux, 550 lux, and 1600 lux). A tube of confidence T can be applied to each of the known controlled lighting conditions. In this manner, color measurements of a CTP can be captured under unknown lighting conditions and the titration of an analyte can determined by the shortest Euclidian distance dh to a trajectory within the tube of confidence for each of the measured color trajectories.

Compare a CTP to MICC/ACC in Multiple Lighting Conditions

Embodiments are destined to be used in different lighting conditions, such as may be found at a user's home or a doctor's office. Typical light conditions can range from dim lighting (about 50 lux in a living room) to office lighting (about 500 lux) through to studio lighting (around 1000 lux) or laboratory lighting (around 1600 lux). All other things being equal, the color of a CTP changes somewhat in response to different lighting conditions.

The simplest method to overcome these color variations of a CTP due to the various lighting conditions is to repeat all tests performed for an original trajectory **460** for each different lighting condition. That is, multiple measured color trajectories of an MICC/ACC may be captured under a plurality of known controlled lighting conditions (e.g., 60 lux, 160 lux, 260 lux, 550 lux, and 1600 lux). This method of compensating for color variations under different lighting conditions requires many tests. Accordingly, capturing measurements for multiple measured color trajectories of an MICC/ACC under a plurality of different lighting conditions (e.g., 60 lux, 160 lux, 260 lux, 550 lux, and 1600 lux) can be time consuming and expensive.

Capturing color points for multiple measured color trajectories of an MICC/ACC under a plurality of different lighting conditions may be automated to reduce time and expense. However, a faster and cheaper alternate method to account for color variations due to the various lighting conditions is to shift an original measured color trajectory under one known lighting condition (e.g., a luminance of 1600 lux) into shifted color trajectories representing other lighting conditions (e.g., 60 lux, 160 lux, 260 lux, and 550 lux).

Referring now to FIG. **21** and FIGS. **22**A-**22**D, the original color trajectory **460** of an analyte measured under lab lighting conditions (e.g., a luminance of 1600 lux) may be shifted into shifted color trajectories according to measurements made under different lighting conditions, such as dim lighting (about 50 or 60 lux in a living room); office lighting (about 500 or 550 lux); studio lighting (around 1000 lux), and other lighting conditions with various luminance values. The shifts to the original color trajectory for an analyte to form a shifted color trajectory may or may not be linear depending on the specific lighting conditions and light spectrum. Accordingly, the shape of a shifted color trajectory for a different light condition may not linearly match the shape of the original measured color trajectory.

A pair of measurements may be used to form a shifted color trajectory. In one embodiment, a measurement of the trajectory shift under new lighting conditions is performed and the original measured color trajectory **460** is mapped to a shifted color trajectory by performing a polynomial interpolation between them.

FIGS. **21** and **22**A-**22**C illustrate three resulting shifted trajectories **461**, **462**, **463**, from the original measured color trajectory **460** to reflect the lighting changes under known different lighting conditions (e.g., 60 lux, 160 lux, 260 lux, 550 lux). A fourth shifted trajectory **464** is shown in FIG. **22**D from the original measured color trajectory **460** to reflect the lighting change under another differing light condition.

With reference to FIG. **22**D, the original measured color trajectory **460** and the resulting shifted color trajectories **461**, **462**, **463**, and **464** are gathered as a set of color trajectories for the MICC/ACC under different lighting conditions. The set of color trajectories for the MICC/ACC under different lighting conditions may then be used for color recognition of the measured color of a CTP for a given analyte and titration of a biological sample.

Test Results with Multiple Trajectories

In FIG. **22**D, a different tube of confidence T can be associated with each of the original measured color trajectory **460** and the differing shifted color trajectories **461**-**464** that form the set of color trajectories for the MICC/ACC under the respective different lighting conditions.

A tube of confidence T for the shifted color trajectory **461** is described with reference to FIG. **22**A. Tubes of confidence T for each of shifted color trajectories **462** and **463** are described with reference to FIGS. **22**B and **22**C.

FIG. **22**B shows a ribbon **2450**B of confidence that represent the radius of the tube of confidence T along points of the shifted color trajectory **462** associated with a different controlled lighting conditions (e.g., 60, 160, 260, 550, 1600 lux). The values for radius along the color trajectory **462** can extrapolated to form confidence curve **2460**B at the edge of each of the ribbon **2450**B.

FIG. **22**C shows a ribbon **2450**C of confidence that represent the radius of the tube of confidence T along points of the shifted color trajectory **463** associated with a different controlled lighting condition (e.g., 60, 160, 260, 550, 1600 lux). The values for radius along the color trajectory **463** can extrapolated to form confidence curve **2460**C at the edge of the ribbon **2450**C. The set of color trajectories for the MICC/ACC of a given analyte under different lighting conditions can be plotted together in one chart.

Additional shifted color trajectories for different luminances can be formed from the original measured color trajectory **460**, such as the shifted color trajectory **464** shown in FIG. **22**D. The resulting shifted color trajectories **461**-**464** from the original measured color trajectory **460** and the original measured color trajectory **460** form a set of color trajectories for the MICC/ACC of a given analyte under different lighting conditions. The set of color trajectories for the MICC/ACC under different lighting conditions are used for comparison and color recognition of the color of a CTP for a given analyte for the respective method steps **2900**A-**2900**B shown in FIGS. **19**A-**19**B. Color measurements of a CTP associated with an analyte can be captured under unknown lighting conditions providing measured points to determine Euclidian distances dh to color trajectories in the set of color trajectories for the MICC/ACC. Titration of the analyte can be determined by the shortest Euclidian distance dh being within the associated tube of confidence to one of the color trajectories of the set.

Test Results and Titrations of CTP

The titration or concentration of an analyte can be determined from the shortest Euclidian distance dh for a measured point within the tube of confidence for a color trajectory of an associated lighting condition. Test results are presented to a user by a visual display connected to or associated with the portable electronic device. A simple way to visualize test results is to present the user with an image of the MICC and draw a border around the closest MICC/ACC color samples. A possible visual depiction of an MICC/ACC **416** showing selected color samples **430**, corresponding to the identified test results, is depicted in FIG. **13**.

Another way to visualize test results is to print the analyte being tested for and the concentration or titration (e.g. normal, positive, very positive, etc.) in a list or table. The list or table can be presented on the visual display of the device, as shown below in Table 1. The correspondence between these the titrations and the colors read by the algorithm is encoded in a look-up table linking the MICC/ACC to the

titrations. Typical values provided are negative (−), trace, small (+), moderate (++), and large (+++).

TABLE 1

Leukocytes	Moderate
Nitrate	Negative
Uro-bilinogen	1
. . .	

Interpretation of the Result

The test results may be further analyzed to provide the user with information about a possible patient condition. In a simple form, the interpretation may include displaying additional facts about the patient condition and possible treatment options. In further embodiments, the method may consider results of two or more separate tests to provide additional information about a patient condition. For example, an indication that the patient has both high leucocytes levels and high nitrites suggests a urinary tract infection (UTI).

In cases where this interpretation might lead to ambiguity, the software may engage in a user dialogue by asking additional contextual questions to the user in order to resolve ambiguities and provide an approximate interpretation in accordance with the medical state of the art. These additional questions are typically implemented as a decision tree, a method well known in the state of the art. For example if the diagnostic instrument **10** identifies a high level of bilirubin, the decision tree function of the software may ask the user for additional information about medications being taken to detect whether the user is experiencing an allergic reaction to a particular medication. Exemplary decision trees for use with the diagnostic instrument are depicted in FIGS. **14** and **15**.

Secure Embodiment for Verification of Unused Diagnostic Instrument

In a further non-limiting embodiment of the invented method, the diagnostic instrument may be examined prior to use to ensure that it is undamaged and suitable for use. More specifically, storage, conditioning, transport and the exposure of the diagnostic instrument to contaminants like air, could damage the diagnostic instrument, making it unreliable in use. It is noted that exposure to containments may render the diagnostic instrument unsuitable for use even if the diagnostic instrument has not yet reached its anticipated expiration date. Accordingly, steps are needed to ensure that the diagnostic instrument is capable of producing accurate results.

As shown in the exemplary embodiment of FIG. **16**, in this embodiment, the user captures an image of the diagnostic instrument prior to exposing the diagnostic instrument to the biological sample **228**. The other steps are equivalent to the method for capturing a digital image depicted in FIG. **3**. The step of capturing the image of the unexposed diagnostic instrument prior to exposing the instrument to the fluid sample is used to verify that the initial (e.g. unused) colors of the CTP, prior to coming into contact with the fluid sample, are within a normal range. More specifically, the appearance of the unused CTP is compared to expected original values by using the algorithms for color comparison described above, in connection with comparing the color-corrected CTP color to the MICC/ACC. However, rather than comparing the color corrected CTP colors to the MICC/ACC, the color corrected CTP values are compared against a Security Table built during the risk and quality management process for the diagnostic instrument. An exemplary Security Table **432** is depicted in FIG. **17**. The Table **432** includes a minimum possible subset **434** of colors for each unused CTP. If the color corrected CTP color for the unused CTP differs from the color samples of the table **432** by more than a predetermined amount, the diagnostic instrument is rejected as defective. More specifically, the Security Table defines the tolerances of acceptable unexposed diagnostic instrument colors. Any deviation from the expected tolerance is rejected. Notice also that table **432** reflects colorimetric values for dry samples, which might appear lighter color than the wet values processed with exposed samples and reported in the MICC/ACC.

Similarly, after the diagnostic instrument is exposed to the fluid sample and before performing additional image analysis on the diagnostic instrument, a digital image of the diagnostic instrument could be compared against a set of colors **436** corresponding to the maximum possible CTP color change. The method of comparing the color change of the CTP with the maximum color change values is the same as the above described comparison processes. If the color change of the CTP is found to exceed the theoretical maximum possible color change, the results are rejected as invalid. In that case, no further image processing needs be performed and the diagnostic instrument should be discarded as defective.

The above described methods may be implemented on a variety of electronic and computing devices and systems, including portable electronic devices and/or server computers, wherein these computing devices include appropriate processing mechanisms and computer readable media for storing and executing the computer readable instructions, such as programming instructions, code, and the like.

As shown in FIG. **18**, personal computers **1900**, **1944**, in a computing system environment **1902** are provided. This computing system environment **1902** may include, but is not limited to, at least one computer **1900** having certain components for appropriate operation, execution of code, and creation and communication of data. For example, the computer **1900** includes a processing unit **1904** (typically referred to as a central processing unit or CPU) that serves to execute computer based instructions received in the appropriate data form and format. Further, this processing unit **1904** may be in the form of multiple processors executing code in series, in parallel, or in any other manner for appropriate implementation of the computer-based instructions.

In order to facilitate appropriate data communication and processing information between the various components of the computer **1900**, a system bus **1906** is utilized. The system bus **1906** may be any of several types of bus structures, including a memory bus or memory controller, a peripheral bus, or a local bus using any of a variety of bus architectures. In particular, the system bus **1906** facilitates data and information communication between the various components (whether internal or external to the computer **1900**) through a variety of interfaces, as discussed hereinafter.

The computer **1900** may include a variety of discrete computer-readable media components. For example, this computer-readable media may include any media that can be accessed by the computer **1900**, such as volatile media, non-volatile media, removable media, non-removable media, etc. As a further example, this computer-readable media may include computer storage media, such as media implemented in any method or technology for storage of information, such as computer-readable instructions, data structures, program modules, or other data, random access

memory (RAM), read only memory (ROM), electrically erasable programmable read only memory (EEPROM), flash memory, or other memory technology, CD-ROM, digital versatile disks (DVDs), or other optical disk storage, magnetic cassettes, magnetic tape, magnetic disk storage, or other magnetic storage devices, or any other medium which can be used to store the desired information and which can be accessed by the computer **1900**. Further, this computer-readable media may include communications media, such as computer-readable instructions, data structures, program modules, or other data in other transport mechanisms and include any information delivery media, wired media (such as a wired network and a direct-wired connection), and wireless media. Computer-readable media may include all machine-readable media with the sole exception of transitory, propagating signals. Of course, combinations of any of the above should also be included within the scope of computer-readable media.

The computer **1900** further includes a system memory **1908** with computer storage media in the form of volatile and non-volatile memory, such as ROM and RAM. A basic input/output system (BIOS) with appropriate computer-based routines assists in transferring information between components within the computer **1900** and is normally stored in ROM. The RAM portion of the system memory **1908** typically contains data and program modules that are immediately accessible to or presently being operated on by processing unit **1904**, e.g., an operating system, application programming interfaces, application programs, program modules, program data and other instruction-based computer-readable codes.

With continued reference to FIG. **18**, the computer **1900** may also include other removable or non-removable, volatile or non-volatile computer storage media products. For example, the computer **1900** may include a non-removable memory interface **1910** that communicates with and controls a hard disk drive **1912**, i.e., a non-removable, non-volatile magnetic medium; and a removable, non-volatile memory interface **1914** that communicates with and controls a magnetic disk drive unit **1916** (which reads from and writes to a removable, non-volatile magnetic disk **1918**), an optical disk drive unit **1920** (which reads from and writes to a removable, non-volatile optical disk **1922**, such as a CD ROM), a Universal Serial Bus (USB) port **1921** for use in connection with a removable memory card, etc. However, it is envisioned that other removable or non-removable, volatile or nonvolatile computer storage media can be used in the exemplary computing system environment **1900**, including, but not limited to, magnetic tape cassettes, DVDs, digital video tape, solid state RAM, solid state ROM, etc. These various removable or non-removable, volatile or non-volatile magnetic media are in communication with the processing unit **1904** and other components of the computer **1900** via the system bus **1906**. The drives and their associated computer storage media discussed above and illustrated in FIG. **18** provide storage of operating systems, computer-readable instructions, application programs, data structures, program modules, program data and other instruction-based computer-readable code for the computer **1900** (whether duplicative or not of this information and data in the system memory **1908**).

A user may enter commands, information, and data into the computer **1900** through certain attachable or operable input devices, such as a keyboard **1924**, a mouse **1926**, etc., via a user input interface **1928**. Of course, a variety of such input devices may be utilized, e.g., a microphone, a trackball, a joystick, a touchpad, a touch-screen, a scanner, etc., including any arrangement that facilitates the input of data, and information to the computer **1900** from an outside source. As discussed, these and other input devices are often connected to the processing unit **1904** through the user input interface **1928** coupled to the system bus **1906**, but may be connected by other interface and bus structures, such as a parallel port, game port, or a universal serial bus (USB). Still further, data and information can be presented or provided to a user in an intelligible form or format through certain output devices, such as a monitor **1930** (to visually display this information and data in electronic form), a printer **1932** (to physically display this information and data in print form), a speaker **1934** (to audibly present this information and data in audible form), etc. All of these devices are in communication with the computer **1900** through an output interface **1936** coupled to the system bus **1906**. It is envisioned that any such peripheral output devices be used to provide information and data to the user.

The computer **1900** may operate in a network environment **1938** through the use of a communications device **1940**, which is integral to the computer or remote therefrom. This communications device **1940** is operable by and in communication to the other components of the computer **1900** through a communications interface **1942**. Using such an arrangement, the computer **1900** may connect with or otherwise communicate with one or more remote computers, such as a remote computer **1944**, which may be a personal computer, a server, a router, a network personal computer, a peer device, or other common network nodes, and typically includes many or all of the components described above in connection with the computer **1900**. Using appropriate communication devices **1940**, e.g., a modem, a network interface or adapter, etc., the computer **1900** may operate within and communication through a local area network (LAN) and a wide area network (WAN), but may also include other networks such as a virtual private network (VPN), an office network, an enterprise network, an intranet, the Internet, the internet cloud, etc. It will be appreciated that the network connections shown are exemplary and other means of establishing a communications link between the computers **1900**, **1944** may be used.

As used herein, the computer **1900** includes or is operable to execute appropriate custom-designed or conventional software to perform and implement the processing steps of the method and system, thereby, forming a specialized and particular computing system. Accordingly, the presently-invented method and system may include one or more computers **1900** or similar computing devices having a computer-readable storage medium capable of storing computer-readable program code or instructions that cause the processing unit **1902** to execute, configure or otherwise implement the methods, processes, and transformational data manipulations discussed hereinafter in connection with the embodiments. Still further, the computer **1900** may be in the form of a personal computer, a personal digital assistant, a portable computer, a laptop, a palmtop, a mobile device, a mobile telephone, a tablet PC, a server, or any other type of computing device having the necessary processing hardware to appropriately process data to effectively implement the computer-implemented method and system.

Although the embodiments has been described in detail for the purpose of illustration based on what is currently considered to be the most practical and preferred embodiments, it is to be understood that such detail is solely for that purpose and that the embodiments is not limited to the disclosed embodiments, but, on the contrary, is intended to cover modifications and equivalent arrangements that are

within the spirit and scope of the appended claims. For example, it is to be understood that the embodiments contemplate that, to the extent possible, one or more features of any embodiment can be combined with one or more features of any other embodiment. Moreover, although features may be described above as acting in certain combinations and even initially claimed as such, one or more features from a claimed combination may in some cases be excised from the combination, and the claimed combination may be directed to a sub-combination or variations of a sub-combination. Accordingly, the claimed embodiments is limited only by patented claims that follow below.

What is claimed is:

1. A method for quantifying color change of at least one test medium on a diagnostic instrument, the method comprising:

obtaining a digital image of at least a portion of the diagnostic instrument that has been exposed to a biological sample, the diagnostic instrument comprising at least one color reference including a plurality of reference samples of different colors and at least one test medium containing a reagent that changes color in response to a concentration of a particular analyte in the biological sample;

identifying at least one reference sample of the plurality of reference samples for the at least one test medium in the diagnostic instrument;

determining a dominant camera-captured color of the at least one reference sample and a dominant camera-captured color of the at least one test medium;

estimating lighting conditions under which the digital image is obtained;

correcting the dominant camera-captured color of the at least one test medium, in response to a color correction factor derived at least in part from the dominant camera-captured color of the at least one reference sample, to determine a corrected test medium color; and

determining a test result including an analyte concentration of the biological sample based on the corrected test medium color.

2. The method of claim **1**, wherein the diagnostic instrument comprises a plurality of test media arranged in a plurality of test specific sequences.

3. The method of claim **1**, wherein the diagnostic instrument further comprises an identification label including or associated with identification information about the diagnostic instrument, and wherein the digital image of the diagnostic instrument includes at least a portion of the identification label.

4. The method of claim **3**, wherein the identification label is at least one of the following: a bar code; a QR code, a near-field communication tag, or any combination thereof.

5. The method of claim **3**, wherein the identification information includes at least one of the following:

a manufacture date of the diagnostic instrument;

an expiration date of the diagnostic instrument;

the analytes tested for by the instrument;

identifying information about a test subject; or

patient condition information.

6. The method of claim **3**, further comprising validating the diagnostic instrument by analyzing the portion of the digital image including the identification label to determine the identification information.

7. The method of claim **6**, further comprising determining whether the diagnostic instrument is in condition for use based on the identification information.

8. The method of claim **3**, wherein the identifying step further comprises:

scanning the digital image to determine a position of the identification label on the digital image;

determining geometric corrections for the digital image based at least in part on the position of the identification label, the geometric corrections comprising one or more angles of rotation of the diagnostic instrument about one or more of an x-axis, a y-axis, a z-axis, or any combination thereof; and

calculating the position of the at least one reference sample and the at least one test medium on the digital image based at least partially on the position of the identification label and the geometric corrections.

9. The method of claim **1**, wherein the identifying step further comprises:

identifying a region of the digital image containing the at least one reference sample; and

removing background artifacts from the identified region by applying a variance operator to remove portions of the identified region having low variance and maintaining portions of the identified region having high variance.

10. The method of claim **9**, wherein the identifying step further comprises:

identifying a region of the digital image including the at least one reference sample and a region of the digital image including the at least one test medium;

identifying edge artifacts on a boundary of the identified regions; and

removing identified edge artifacts from the digital image.

11. The method of claim **1**, wherein the determining the dominant camera-captured color further comprises:

defining spatial guard bands around or just within a boundary of the at least one reference sample and the at least one test medium to form enclosed areas; and

reducing color noise within the enclosed areas of the at least one reference sample and the at least one test medium by averaging the color within the enclosed areas.

12. The method of claim **11**, further comprising applying a median filter to at least one enclosed area to determine the dominant color therein.

13. The method of claim **1**, wherein the color correcting step further comprises:

identifying a reference sample that is white in the digital image;

determining the correction factor based at least partially on an average color of the white reference sample in the digital image; and

color correcting the color of the at least one test medium by applying the correction factor using a white balancing algorithm.

14. The method of claim **1**, wherein the color correcting step further comprises:

determining luminescence of the at least one reference sample from the estimated lighting conditions;

comparing the luminescence of the at least one reference sample to a predetermined expected luminescence to determine a luminescence correction factor;

comparing the dominant camera-captured color of the at least one reference sample with an expected sample color to determine a color correction factor; and

correcting the camera-captured color of the at least one test medium based at least partially on the luminescence correction factor and the color correction factor.

15. The method of claim 1, further comprising rejecting the digital image if the corrected test medium color exceeds a predetermined value.

16. The method of claim 1, wherein the camera-captured reference sample and the camera-captured test medium color each comprise a plurality of color components defining at least one color space, and wherein the at least one color space is at least one of the following:

red-green-blue (RGB) color space; cyan-magenta-yellow-key (CMYK) color space;

International Commission on Illumination (CIE) XYZ color space;

International Color Consortium (ICC) device independent color space (L*a*b color space);

pantone color space; or

Munsell color space.

17. A system for performing diagnostic tests of a biological sample, the system comprising:

a diagnostic instrument comprising a color reference comprising a plurality of reference samples of different colors and a plurality of test media containing a plurality of reagents, wherein the plurality of reagents change color in the presence of various levels of a plurality of different analytes in a biological sample; and

a portable electronic device comprising a digital camera sensor for capturing a digital image of at least a portion of the diagnostic instrument and a processor, wherein the processor is configured to:

identify at least one of the reference samples and at least one of the test media in the digital image of the diagnostic instrument;

determine a dominant camera-captured color of a reference sample and a dominant camera-captured color of the at least one test media;

estimate lighting conditions under which the digital image is captured;

correct the dominant camera-captured color of the at least one test media, in response to a color correction factor derived at least in part from the dominant camera-captured color of the reference sample, to determine a corrected test media color; and

determine a test result including an analyte concentration of the biological sample based on the corrected test media color.

* * * * *