US0D1058554S

(12) United States Design Patent

Shankar et al.

(10) Patent No.: US D1,058,554 S
(45) Date of Patent: ** Jan. 21, 2025

(54) **WEARABLE PERSONAL HEALTH, ACTIVITY AND LIFESTYLE TRACKING DEVICE**

(71) Applicant: **ULTRAHUMAN HEALTHCARE PRIVATE LIMITED**, Bengaluru (IN)

(72) Inventors: **Apoorv Shankar**, Bangalore (IN); **Yogansh Namdeo**, Bengaluru (IN); **Anoop Jayan**, Bangalore (IN)

(73) Assignee: **ULTRAHUMAN HEALTHCARE PRIVATE LIMITED**, Bengaluru (IN)

(**) Term: **15 Years**

(21) Appl. No.: **29/850,626**

(22) Filed: **Aug. 22, 2022**

(30) **Foreign Application Priority Data**

Feb. 23, 2022 (IN) 359195-001
Feb. 23, 2022 (IN) 359196-001
Feb. 23, 2022 (IN) 359197-001
Feb. 23, 2022 (IN) 359198-001

(51) **LOC (15) Cl.** **14-02**

(52) **U.S. Cl.**
USPC **D14/344**

(58) **Field of Classification Search**
USPC ..... D14/138 R, 344, 358; D10/30, 31, 32, D10/38, 70, 128, 132; D11/1, 2, 3, 4, 5, D11/6; D24/167
CPC G04G 17/00; G04G 17/08; G04G 17/083; G04G 17/045; G04G 21/00; G04G 21/02; G04G 21/025; G04G 21/06; G04G 21/08; G04G 99/006; G06F 1/163; A44C 5/00; A44C 5/02; A44C 5/022; A44C 5/025; A44C 5/0007; A44C 5/0015; A44C 5/0046; A44C 5/0053; A44C 5/2052; A44C 5/2071; A44C 9/00; A44C 9/0053
See application file for complete search history.

(56) **References Cited**

U.S. PATENT DOCUMENTS

D711,268 S * 8/2014 Kim D10/70
D714,179 S * 9/2014 Park D11/3
D724,468 S * 3/2015 Tan D11/3
D726,572 S * 4/2015 Walters D14/344
D733,604 S * 7/2015 Tan D11/3
D734,329 S * 7/2015 Lee D14/344
(Continued)

FOREIGN PATENT DOCUMENTS

IN 359197-001 * 4/2022
IN 359196-001 * 5/2022

OTHER PUBLICATIONS

Review: Oura Ring Gen3, www.wired.com, Nov. 15, 2021. https://www.wired.com/review/oura-ring-gen3/ (Year: 2021).*
(Continued)

Primary Examiner — Messina L Smith
Assistant Examiner — Kwabena A. Ankobiah
(74) *Attorney, Agent, or Firm* — LADAS & PARRY LLP

(57) **CLAIM**

The ornamental design for a wearable personal health, activity and lifestyle tracking device as shown and described.

DESCRIPTION

FIG. **1** is a left side elevational view of a wearable personal health, activity and lifestyle tracking device showing our new design;
FIG. **2** is a right side elevational view thereof;
FIG. **3** is a top plan view thereof;
FIG. **4** is a bottom plan view thereof;
FIG. **5** is a perspective view thereof;
FIG. **6** is a rear elevational view thereof; and,
FIG. **7**. is a front elevation view thereof.

1 Claim, 4 Drawing Sheets

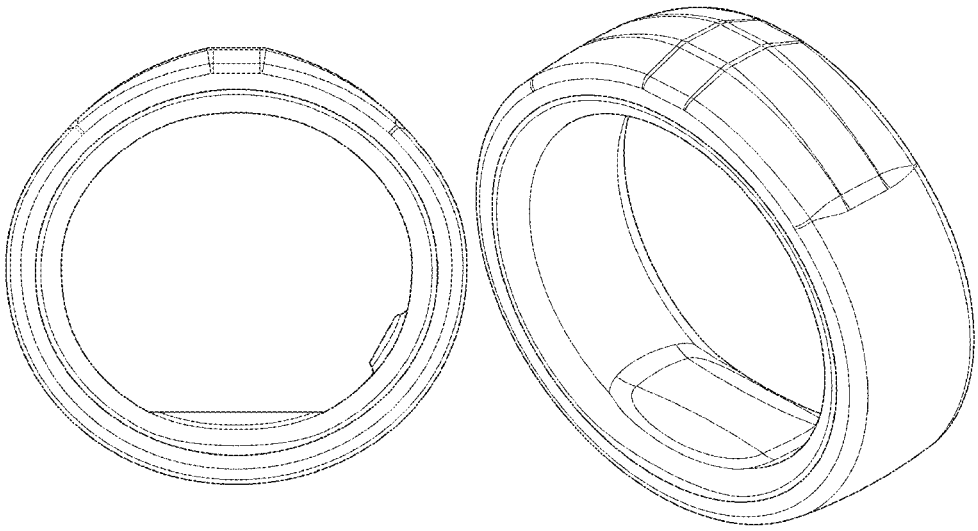

(56) **References Cited**

U.S. PATENT DOCUMENTS

D737,716	S	*	9/2015	Tan	D11/3
D756,999	S	*	5/2016	von Badinski	D14/344
D804,471	S	*	12/2017	von Badinski	D14/344
D829,712	S	*	10/2018	Becker	D14/344
D951,786	S	*	5/2022	Kivelä	D10/70
D992,432	S	*	7/2023	Lee	D24/186
D1,008,058	S	*	12/2023	Kivelä	D10/70
D1,011,946	S	*	1/2024	Lieberman	D11/2
2023/0270384	A1	*	8/2023	Apoorv	A61B 5/02055 600/301

OTHER PUBLICATIONS

Ultrahuman Ring | Beautiful Metabolism Tracker Ring!, www.youtube.com, Jul. 23, 2022. https://www.youtube.com/watch?v=MZdaXDsM5yk (Year: 2022).*

Ultrahuman Air Smart Health Tracking Ring Review, www.mensfitnesstoday.com, Sep. 26, 2023. https://mensfitnesstoday.com/reviews/fit-tech/ultrahuman-air-smart-health-tracking-ring-review/ (Year: 2023).*

* cited by examiner

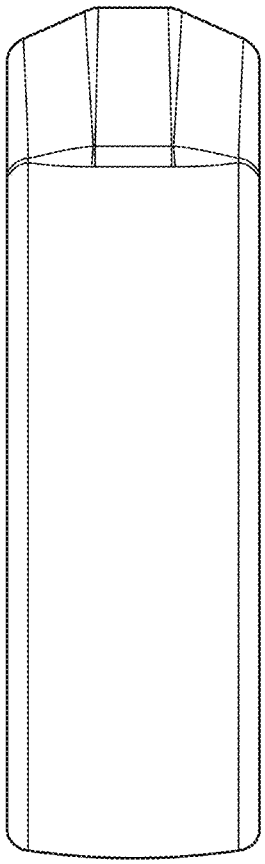

FIG. 1

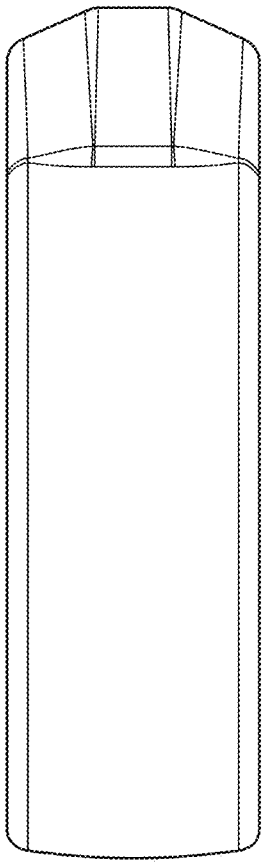

FIG. 2

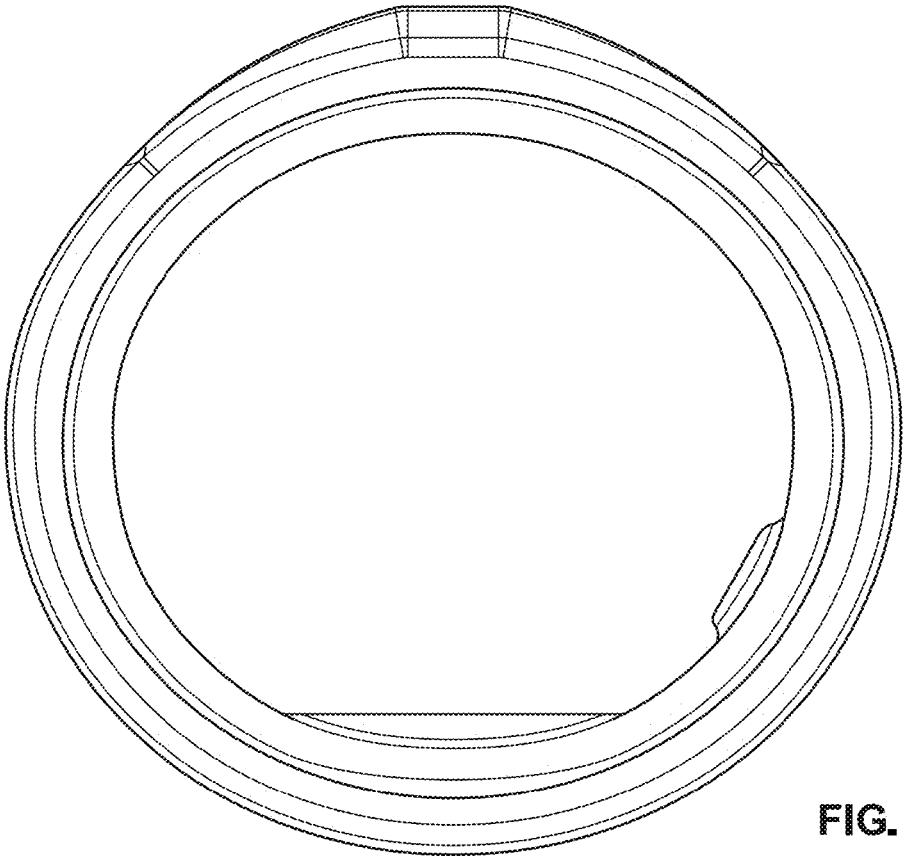

FIG. 3

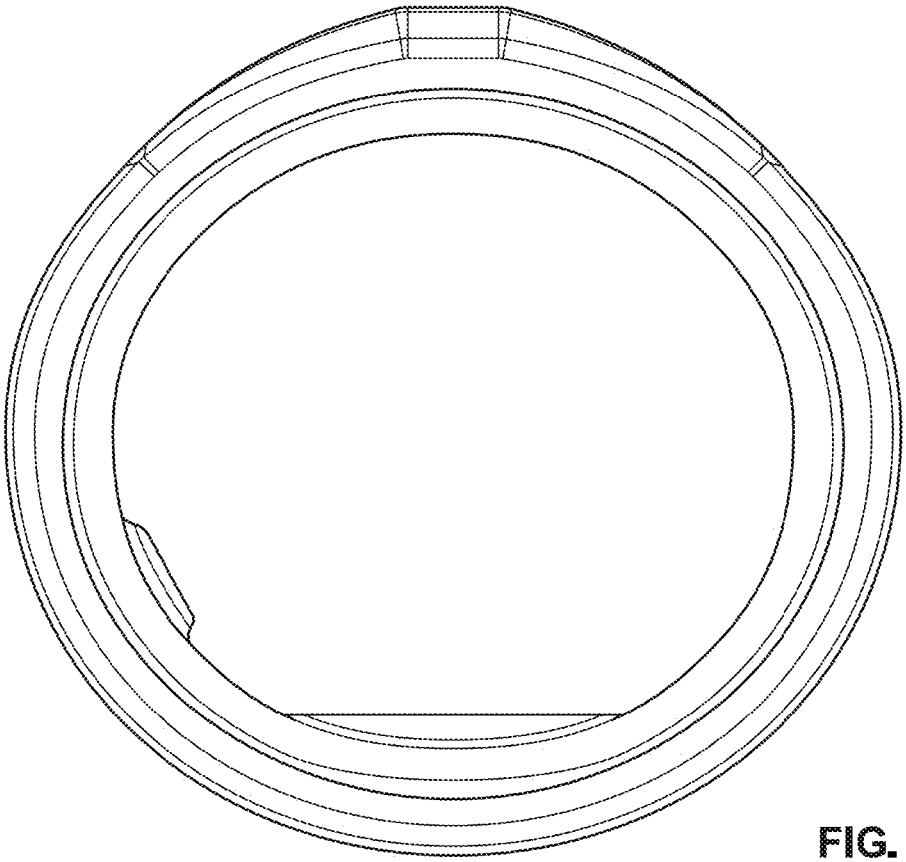

FIG. 4

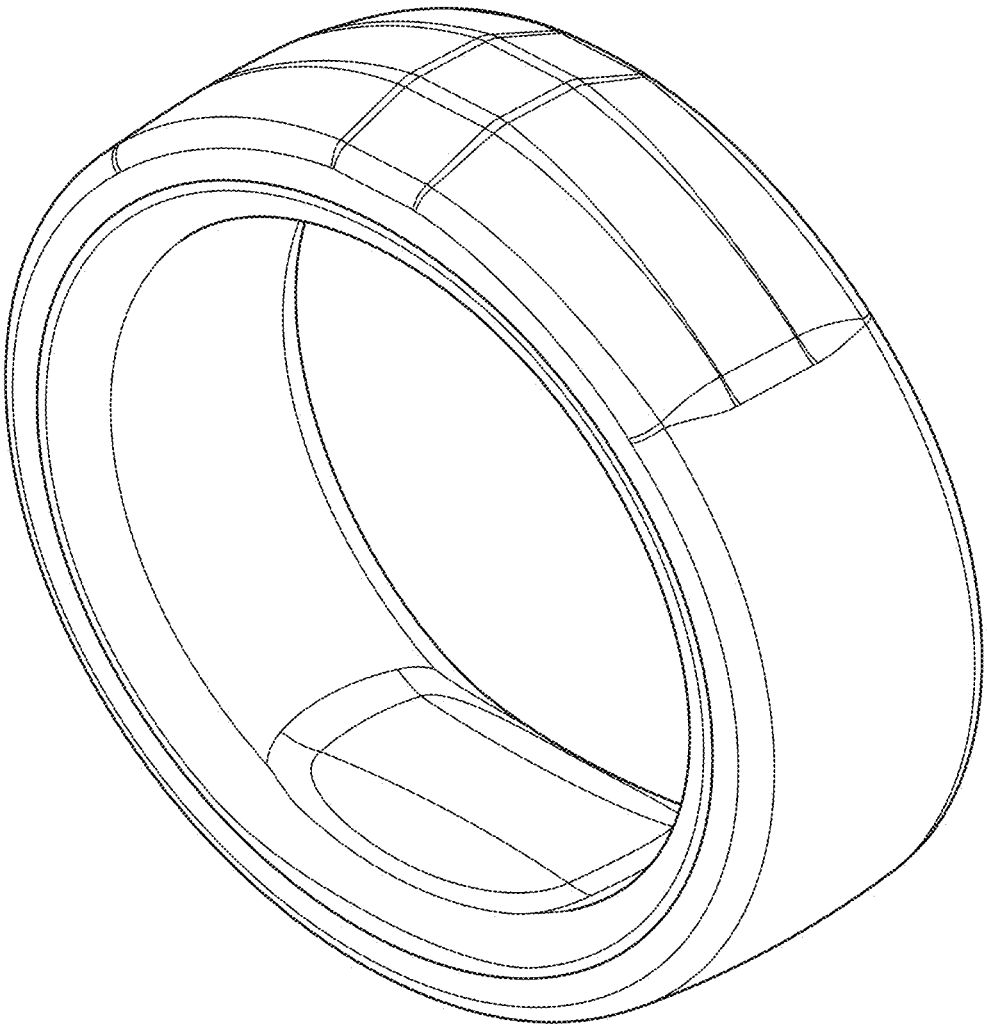

FIG. 5

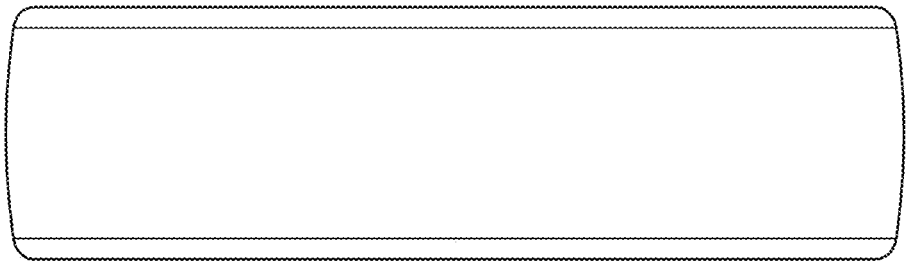

FIG. 6

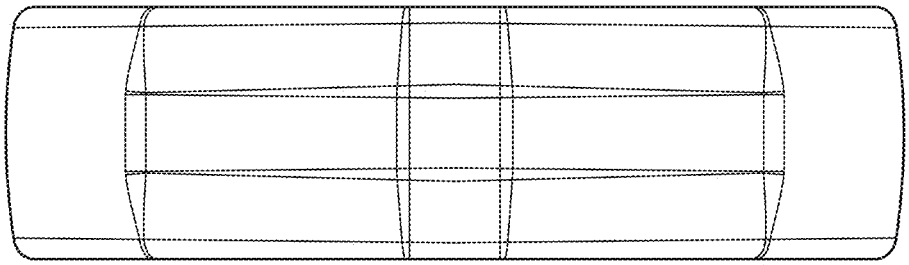

FIG. 7