Oct. 28, 1924. 1,512,916

A. ELMENDORF

METHOD OF AND APPARATUS FOR SHARPLY BENDING FIBER BOARDS

Filed Dec. 18, 1922 3 Sheets-Sheet 1

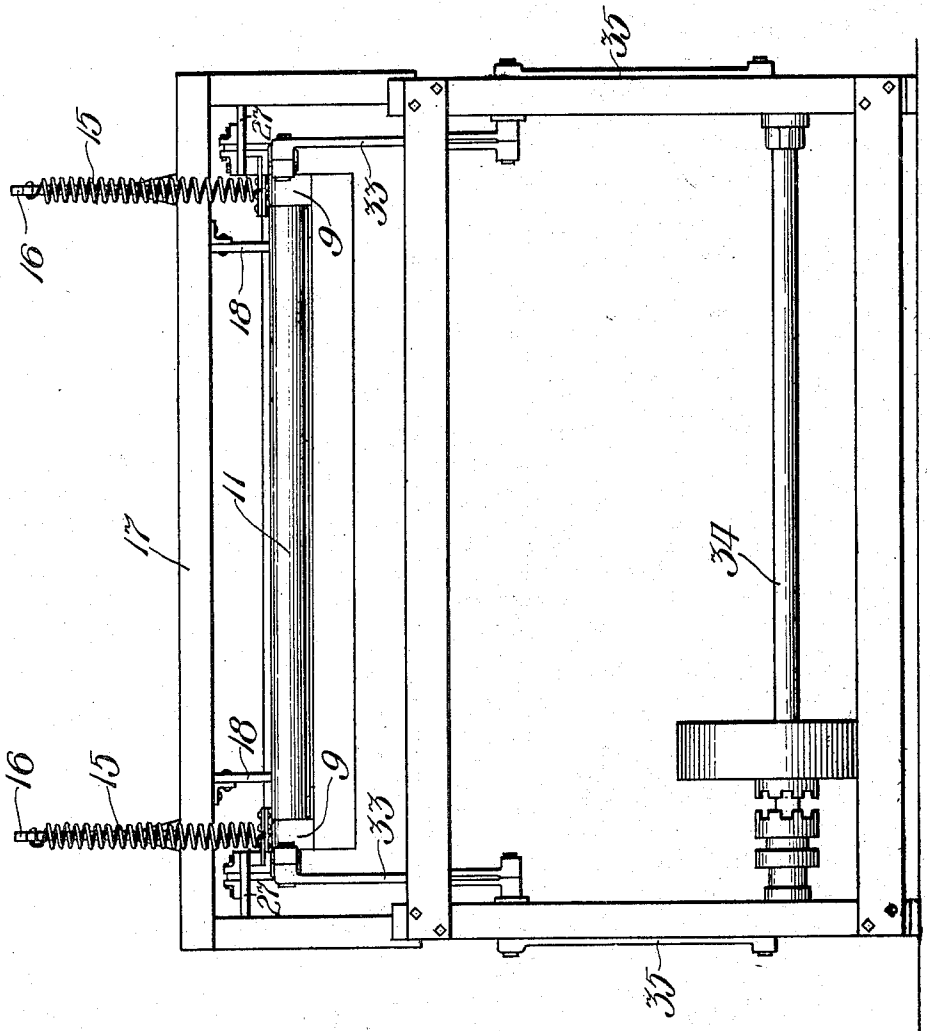

Fig. 2.

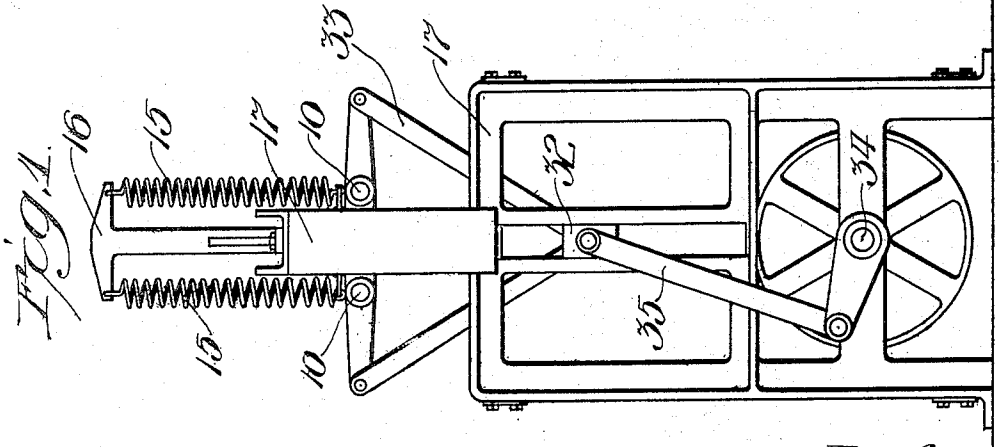

Fig. 1.

Inventor:
Armin Elmendorf,
by Wm. F. Frendenreich, Atty.

Oct. 28, 1924. 1,512,916

A. ELMENDORF

METHOD OF AND APPARATUS FOR SHARPLY BENDING FIBER BOARDS

Filed Dec. 18, 1922 3 Sheets-Sheet 2

Fig. 3.

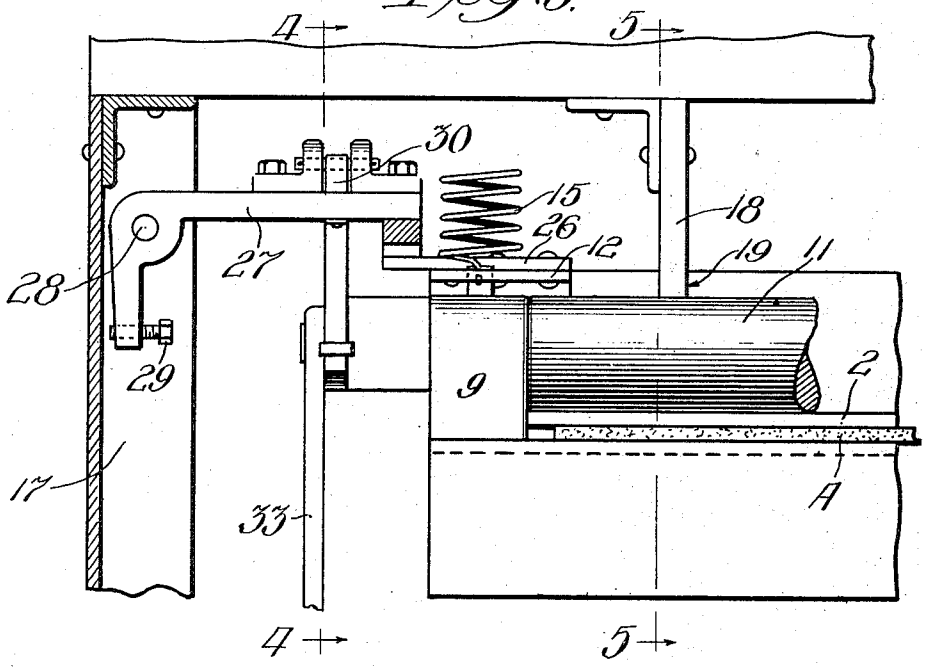

Fig. 6.

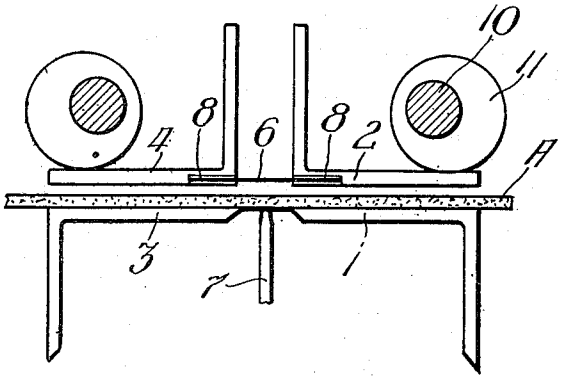

Fig. 8.

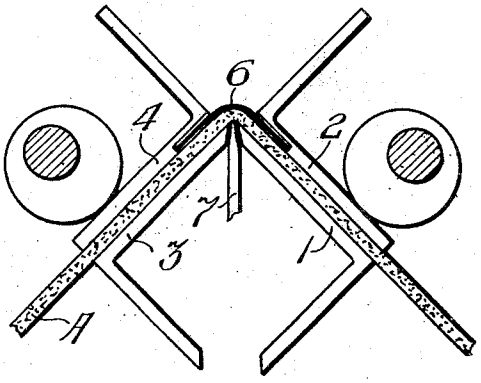

Fig. 7.

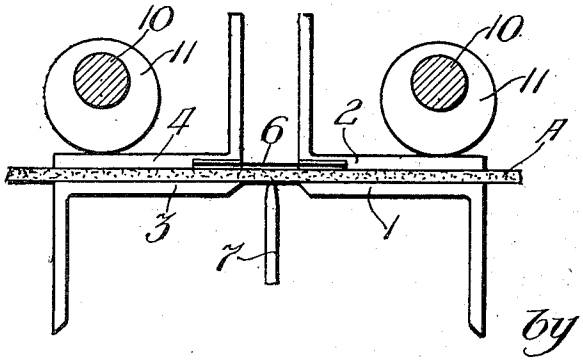

Inventor:
Armin Elmendorf,
by Wm F Frendenreich,
Atty.

Oct. 28, 1924. 1,512,916

A. ELMENDORF

METHOD OF AND APPARATUS FOR SHARPLY BENDING FIBER BOARDS

Filed Dec. 18, 1922 3 Sheets-Sheet 3

Fig. 4.

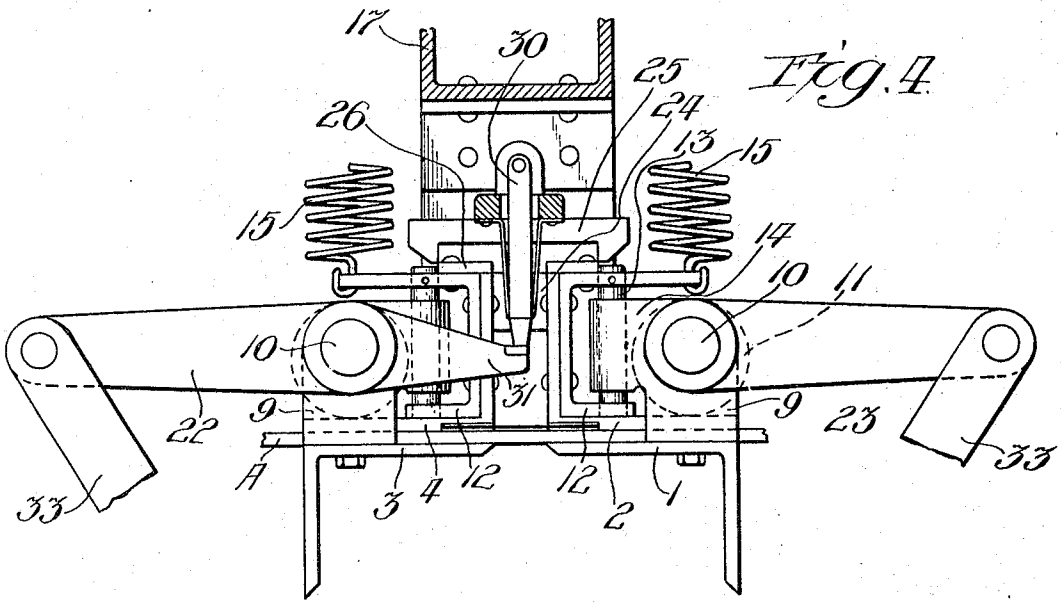

Fig. 5.

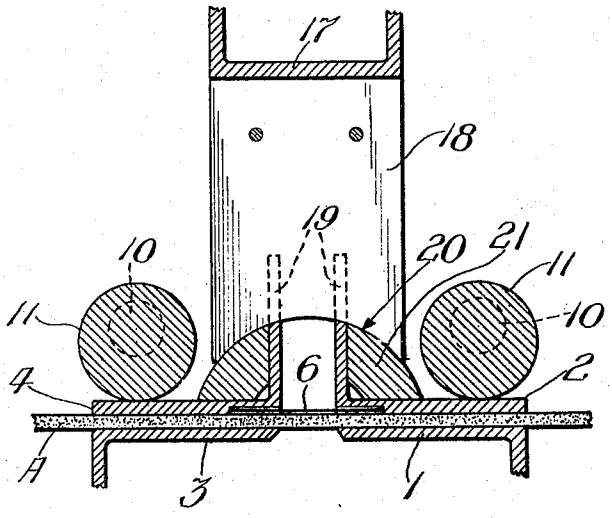

Inventor:
Armin Elmendorf,
by Wm. F. Frendenreich
Atty.

Patented Oct. 28, 1924. 1,512,916

UNITED STATES PATENT OFFICE.

ARMIN ELMENDORF, OF CHICAGO, ILLINOIS.

METHOD OF AND APPARATUS FOR SHARPLY BENDING FIBER BOARDS.

Application filed December 18, 1922. Serial No. 607,577.

To all whom it may concern:

Be it known that I, ARMIN ELMENDORF, a citizen of the United States, residing at Chicago, county of Cook, State of Illinois, have invented a certain new and useful Improvement in Methods of and Apparatus for Sharply Bending Fiber Boards, and declare the following to be a full, clear, and exact description of the same, such as will enable others skilled in the art to which it pertains to make and use the same, reference being had to the accompanying drawings, which form a part of this specification.

Many objects, particularly packing boxes or containers, can be made cheaply out of boards of wood pulp or other fibrous material, provided that such boards can be quickly and cheaply bent into shape without bringing about structural weakness along the lines of the bends. The tensile strength of material of this kind is not very great, and therefore if it be attempted to bend it sharply, bringing about compression on the concave side and tension on the convex side, it will be found that the material will crack on the outer or convex side, thus weakening the product at the corner or corners.

The object of the present invention is to produce a simple and novel method for bending fiber board or the like in such a manner that the material of the board will not be placed under tension during the bending operation, the change in form being brought about by compressive forces alone; thus avoiding breaking at the corners due to the inability of the material to withstand tensile stresses.

A further object of the present invention is to produce a simple and novel apparatus for carrying out my improved method.

The various features of novelty whereby my invention is characterized will hereinafter be pointed out with particularity in the claims; but for a full understanding of my invention and of its objects and advantages, reference may be had to the following detailed description taken in connection with the accompanying drawings, wherein:

Figure 1 is an end elevation and Fig. 2 a front elevation of a machine embodying my invention adapted to carry out my improved method;

Fig. 3 is a fragment on an enlarged scale on a plane passing through the center of the machine at right angles to the plane of Fig. 1;

Fig. 4 is a section taken approximately on line 4—4 of Fig. 3;

Fig. 5 is a section taken approximately on line 5—5 of Fig. 3; and

Figs. 6, 7 and 8 are views similar to Fig. 5, but more diagrammatic, illustrating the various steps in performing a bending operation.

My improved method can be simply explained by reference to Figs. 6, 7 and 8. Referring to these figures, A represents a fiber board of wood pulp or any other usual or suitable fibrous material which it is desired to bend. I grip the board between two clamps composed of opposed jaw members 1 and 2 and 3 and 4, respectively; these clamps extending throughout the length of the board and having those edges nearest to each other lying parallel with each other and on opposite sides of the line on which the bend is to be made. If the two clamps are then swung relatively to each other the board will be bent along a line lying in the free zone between the clamps. However, if nothing further were done, the convex side of the bend would break and crack, as heretofore explained. To prevent this breaking or cracking I connect together two of the clamping jaws, namely, those which engage what may be called the outer side of the board, by means of a flexible panel 6, which must possess strength as well as flexibility, and which may therefore conveniently be made of spring steel. Fig. 6 shows the work in the open clamps, while Fig. 7 shows the clamps closed on the work. It will be seen that when the clamps are swung relatively to each other from the positions shown in Fig. 7, to those shown in Fig. 8, the distance between the inner edges of the jaws 2 and 4, measured across the surface of the intervening flexible strip or panel, remains un-

changed, while, on the other hand, the inner edges of the jaws 1 and 3 are compelled to approach each other. Consequently, since the board is immovably gripped in the clamps, no stretching of the same can occur or tend to occure at any point in the zone lying between the two clamps. On the other hand, all of the rearrangement or change in condition of the material in the board along the bend is the result of a compressing or compacting of such material; there being theoretically neither compression nor extension in the extreme outer skin of the board, there being a slight degree of compression at points lying just inside of this outer skin or surface, and the degree of compression increasing as the inner surface of the board is approached. Since the panel of the board which is left exposed for the bending operation is of appreciable width, it may sometimes happen that the material on the inner side of the bend will tend to split away and form an inward bulge. In order to prevent this, the work may be bent over the long edge of a board, such as indicated at 7; this board fitting between the adjacent edges of the clamp members 1 and 3 at the end of the bending operation. In the arrangement shown, the flexible connecting piece 6 has reinforcing pieces or strips secured to opposite faces thereof along each of the long edges; the reinforced portions of the flexible member being set into the jaws 2 and 4, so as to lie flush with the working faces of the latter. This causes the exposed flexible portion of the connecting piece to be spaced apart a short distance from the board when the board is clamped on the jaws, and the outer portions of the board, at the bend, are therefore given a slight amount of room for expansion. This deail may facilitate the bending operation somewhat, although it need not always be employed.

It will thus be seen that my improved method makes it possible rapidly and economically to bend boards to form sharp right-angled corners without breaking the boards along the lines of the bends; thereby making it possible cheaply to produce satisfactory receptacles, containers and other objects out of fiber board bent into shape and having meeting edges fastened together in any suitable manner.

In order to insure that a bend will be right-angled when the work is removed from the clamps, it is advisable to carry the bending action through an angle somewhat greater than ninety degrees, as the board will usually not take a definite set at the extreme limit to which the bending is carried, but will spring back somewhat from this extreme condition.

In Figs. 1 to 5 I have illustrated a machine in which my improved method may be carried out. For the sake of stiffness the clamping jaws may be in the form of angle irons, as shown. The lower clamping jaws or angle irons, 1 and 3, are shown as being somewhat longer than the upper jaw members, 2 and 4. Projecting upwardly from the ends of the lower clamping jaws are bearing blocks 9 fixed to the jaws. A shaft 10 extends across each upper jaw member and is journalled at its ends in the bearing blocks on the corresponding lower jaw member. The body portion of each shaft is in the form of a cylinder 11, whose axis is eccentric to the axis of the ends which form the supporting journals. Each upper jaw member has fastened to each end, in the angle thereof, a channel member 12 provided with a vertical short shaft or heavy pin, 13, extending between and fixed to the flanges of the channel. Each bearing block 9 has a projection 14 through which one of the shafts or pins 13 extends; the projections being of less height or thickness than the distance between the flanges of the channels 12. It will thus be seen that the lower jaw of each is hung from the cooperating upper jaw, and the jaws of each clamp have limited movements from and toward each other. The eccentric shafts, which are in effect mere long cams, are so proportioned that when they are rotated in one direction, the clamps open by gravity while, upon rotation in the other direction, the eccentrics, riding on the upper jaw members, lift the lower jaws and close the clamps on the work.

The clamps are shown as hung from strong coiled springs 15, each fastened at its lower end to one of the channels 12, and at its upper end to an overhead part 16 of a suitable frame 17. These springs are strong enough normally to hold the clamps in contact with the lower ends of abutments 18 projecting down from the frame member 17. The vertical flanges of the upper clamping jaws are preferably slotted, as indicated at 19, to permit the abutments to extend down part the upper edges of these flanges. The lower edges 20 of the abutments have a concave configuration, conveniently that of an arc of a circle having its center somewhere in the vicinity of the plane of a board arranged in the machine in order to be bent thereby and midway between the two clamps. The angles of the upper jaw members may be filled out with blocks 21 just below the slots 19, the filling blocks being shaped to fit against the curved lower edges of the abutments 18.

The eccentric shafts may be oscillated by suitable arms 22 and 23, two of which are fixed to the ends of each eccentric shaft and project radially therefrom. If the parts are properly proportioned it will be seen that although when the clamps are

open the arms 22 and 23 are movable relatively to the clamps, they become locked to the clamps by reason of the wedging action of the eccentric shafts when the clamps are closed on the work. Therefore, by causing the clamps to open when the actuating arms are swung up and to close when the arms are swung down, it will be seen that a continued downward movement of the arms at the end of the clamping movement will tend to draw the clamps bodily in the downward direction. This bodily downward movement of the clamps is resisted by the suspending springs which hold the clamps up against the overlying abutments. The result is that the clamps are not drawn bodily down, but are rotated in such directions that their outer edges swing down and inward toward each other, namely, from the positions indicated in Figs. 5 and 7, to the positions indicated in Fig. 8, thereby bending the work.

In order to prevent the vertical chords or flanges of the upper jaws from coming in contact with each other when the springs are allowed to return the clamps to the normal idle positions, I place stops or spacers 24 on the abutments 18; the vertical flanges of the upper jaws striking these spacers when the other flanges reach horizontal positions.

It is desirable that the work be firmly clamped in the machine before the clamps can start their swinging movements in the direction to perform a bending operation, and I have therefore provided means for locking the clamps against turning movements until the clamping movement of the eccentric shafts is completed. To this end, as best shown in Figs. 3 and 4, I provide catches 25, each of which may consist of a bar having at the ends hooks adapted to engage with the outer edges of two plates 26 fastened on top of the channels 12, the hooks being just far enough apart to permit the catch to span the distance between the two plates and drop down over both of them in the normal idle position. Such a catch is placed at each end of the machine. Each catch may conveniently be supported on one end of a bell-crank 27 pivoted to the frame of the machine, as indicated at 28, a set screw 29 being provided in position to serve as a limiting stop and thus permit adjustment to be made. Each bell-crank is provided with a depending finger 30, which hangs above an inward extension 31 of the corresponding actuating arm 22, and is adapted to be engaged thereby and be lifted to release the corresponding catch. The parts are so proportioned that the members 31 do not engage with the fingers 30 when the clamps are open or during the closing movements of the clamps until the clamping action is about to be completed. Just as the clamps are fully closed on the work, so that the actuating arms can no longer swing relatively thereto, the catches will have been raised sufficienty high to release the clamps and permit them to begin their bending movements.

The actuating arms may be operated in any suitable way. In the arrangement shown, the two arms at each end of the machine are connected to a local cross head 32 by connecting rods 33. Each cross head is converted to a power-driven crank shaft 34 by a suitable connecting rod 35. During each revolution of the crank shaft the bending apparatus operates through a complete cycle; that is, the clamps are closed on the work, the bending operation is performed, and the clamps are then brought back to their initial position, flattening out the work, and are then opened so that the work may be slipped out and a new board inserted or else be moved along to permit a bend to be made at another point therein.

While I have illustrated and described only a single form of machine for carrying out my improved method, I do not desire to be limited to the details of this specific machine, but intend to cover all mechanism, apparatus and series of steps which come within the definitions of my invention constituting the appended claims.

I claim:

1. The method of bending a fiber board which consists in gripping it in two clamps spaced apart from each other and connected together on one side of the board by a short flexible piece, and then bending the board along a line between said clamps in such a direction that said flexible piece will lie on the convex side of the bend and the inner adjacent edges of the members of the clamp on the inner side of the board come close to each other.

2. A bending device comprising two separated clamps having two corresponding jaws connected together by a flexible piece, the clamps being mounted to be so movable that the inner ends of the other two jaws come close to each other when the clamps are placed at a predetermined angel to each other with the flexible piece on the outer side.

3. A bending device comprising two separated clamps having two corresponding jaws connected by a thin flexible panel of metal of such length that the inner ends of the other two jaws come close to each other when the clamps are made to lie at an angle of ninety degrees relatively to each other with said flexible panel on the outer side.

4. The method of forming in a fiber board a right angled bend having a sharp corner on the inner side and a rounded corner on the outer side which consists in bending said board while gripping it between two clamps

spaced apart and so constructed that when they are swung relatively to each other until they lie at an angle of approximately 90 degrees to each other, with the board held between them, the two jaws on the inner side of the board come close to each other at their inner edges; and preventing any increase in the distance between the inner ends of the other two jaws, measured along the outer surface of the board, during the bending operation.

In testimony whereof, I sign this specification.

ARMIN ELMENDORF.