(12) INTERNATIONAL APPLICATION PUBLISHED UNDER THE PATENT COOPERATION TREATY (PCT)

(19) World Intellectual Property Organization
International Bureau

(43) International Publication Date
23 September 2010 (23.09.2010)

PCT

(10) International Publication Number
WO 2010/107359 A1

(51) International Patent Classification:
E04H 12/12 (2006.01) *H01Q 1/12* (2006.01)
B28B 7/16 (2006.01)

(21) International Application Number:
PCT/SE2009/051391

(22) International Filing Date:
8 December 2009 (08.12.2009)

(25) Filing Language: English

(26) Publication Language: English

(30) Priority Data:
61/161,506 19 March 2009 (19.03.2009) US

(71) Applicant *(for all designated States except US)*: **TELEFONAKTIEBOLAGET L M ERICSSON (PUBL)** [SE/SE]; S-164 83 Stockholm (SE).

(72) Inventor; and

(75) Inventor/Applicant *(for US only)*: **HÄGER, Peter** [SE/SE]; Skandiastigen 6, S-182 63 Djursholm (SE).

(74) Agent: **NILSSON, Charlotte**; Ericsson AB, Patent Unit 3G, Torshamnsgatan 21-23, S-164 80 Stockholm (SE).

(81) Designated States *(unless otherwise indicated, for every kind of national protection available)*: AE, AG, AL, AM, AO, AT, AU, AZ, BA, BB, BG, BH, BR, BW, BY, BZ, CA, CH, CL, CN, CO, CR, CU, CZ, DE, DK, DM, DO, DZ, EC, EE, EG, ES, FI, GB, GD, GE, GH, GM, GT, HN, HR, HU, ID, IL, IN, IS, JP, KE, KG, KM, KN, KP, KR, KZ, LA, LC, LK, LR, LS, LT, LU, LY, MA, MD, ME, MG, MK, MN, MW, MX, MY, MZ, NA, NG, NI, NO, NZ, OM, PE, PG, PH, PL, PT, RO, RS, RU, SC, SD, SE, SG, SK, SL, SM, ST, SV, SY, TJ, TM, TN, TR, TT, TZ, UA, UG, US, UZ, VC, VN, ZA, ZM, ZW.

(84) Designated States *(unless otherwise indicated, for every kind of regional protection available)*: ARIPO (BW, GH, GM, KE, LS, MW, MZ, NA, SD, SL, SZ, TZ, UG, ZM, ZW), Eurasian (AM, AZ, BY, KG, KZ, MD, RU, TJ, TM), European (AT, BE, BG, CH, CY, CZ, DE, DK, EE, ES, FI, FR, GB, GR, HR, HU, IE, IS, IT, LT, LU, LV, MC, MK, MT, NL, NO, PL, PT, RO, SE, SI, SK, SM,

[Continued on next page]

(54) Title: A TELECOMMUNICATION TOWER SEGMENT

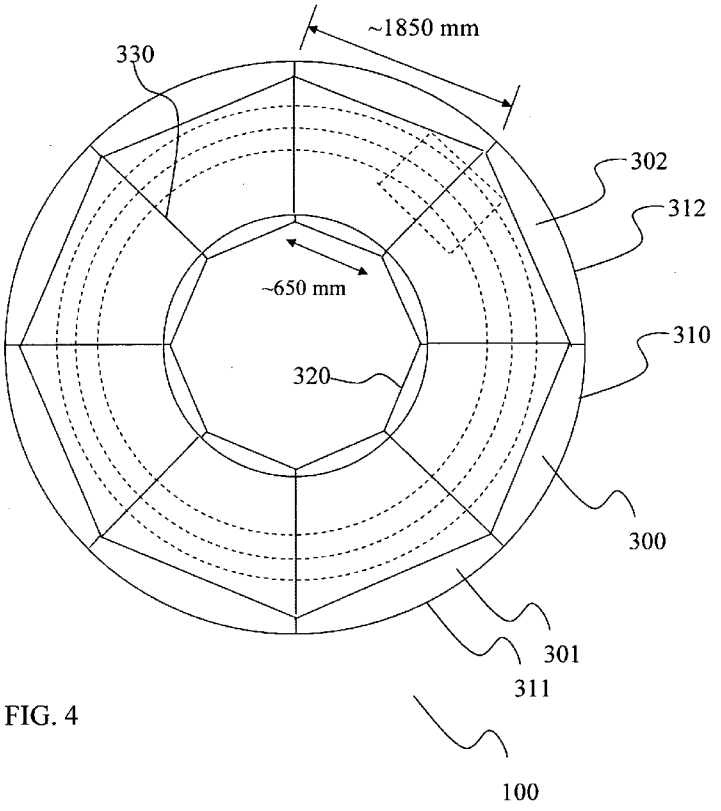

FIG. 4

(57) Abstract: A telecommunications tower segment for the construction of a section of a telecommunications tower is disclosed. A plurality of such segments is adapted to form a tubular section of the telecommunications tower. Each telecommunications tower segment has a convex first surface. Additionally, each telecommunications tower segment has a second surface opposite to the first surface, wherein the second surface is flat or partly flat.

WO 2010/107359 A1

TR), OAPI (BF, BJ, CF, CG, CI, CM, GA, GN, GQ, GW, ML, MR, NE, SN, TD, TG).

Published:

— *with international search report (Art. 21(3))*

A Telecommunication Tower Segment

Technical field

The present invention relates to towers, and in particular to telecommunications towers for use in telecommunications networks. More specifically, it relates to a telecommunications tower segment, a telecommunications tower section, a telecommunications tower, a method of manufacturing a telecommunications tower segment and a method of building a telecommunications tower.

Background

Prevailing technology for telecom towers/masts, whether self supported or guyed, are lattice steel constructions. These masts are often galvanized using hot dip galvanization, where the steel structure is coated with a layer of zinc. Steel towers are usually manufactured for a design life between 30-50 years. Coated structures are sensible to mechanical wear, and lattice steel towers are no exception. Towers get surface damages during transportation and installation, and such damages need to be mended when the tower is installed. Since hot dip is not an option when the tower is installed, painting or spraying with cold galvanization is a method used. Damages to a protective zinc layer can not be avoided during transportation and installation, and corrosion will start at damaged areas. Corrosion is what sets design life for all steel structures, and regardless of zinc coat, certain maintenance is required to stop corrosion during a construction life time.

WO-2008136717-A1 discloses an antenna tower elongated structure which comprises base, intermediate, and terminating segments (S1-S4). The segments are made of reinforced concrete, and interconnected in a longitudinal direction by elongated fastening members that together form a longitudinal interconnection structure that interconnects the base segment to the terminating segment without gaps in the longitudinal direction. Each segment comprises fastening member guides formed in the

wall of the segment and arranged to preserve the fastening members at predetermined configuration with respect to the segment. See fig.1, fig. 2 and fig. 3.

WO-2007108766-A1 and WO-2007108765-A1 disclose hollow conical antenna tower structures comprising a vertical elongated tower body with an internal installation shaft. The tower is arranged to house a radio base station and the tower body comprises greater than or equal to two modular segments provided with mating interconnection mechanism comprising mating guide structures.

WO-2007108731-A1 discloses an antenna tower structure that comprises radio base stations; tubular tower sections having hollowed cross section; arrangement for moving a whole antenna radio base station along an elongation of the antenna tower structure, the antenna radio base station being disposed inside the tubular tower; and entrance into the antenna tower structure giving access for service of the antenna radio base station.

Summary

It has been realized by the inventor that in earlier versions of tower structures, the quarters used in the ground sections may cause some manufacturing problems. First of all, the quarters may be too big to transport on common roads. This is so because, these quarters are not stackable and require special permit transports to be moved. Furthermore, due to the shape of the quarters used in earlier versions, they had to be cast in a double sided mold. Again, casting in a double sided mold may be time consuming and, hence, expensive. The shape of the existing quarters combined with requirements for up to 90 MPa compression strength of the concrete, generally makes it very difficult to produce large scale ground sections in a fast and inexpensive way. Even if manufacturing was possible the ingredients and the dimensions used in earlier versions (cement ratio, super plasticizers etc) make it an expensive construction.

It is an object to obviate one or more of the disadvantages or deficiencies mentioned above, singly or in combination, and to provide an improved telecommunications tower segment.

According to a first aspect of the invention, a telecommunications tower segment for the construction of a section of a telecommunications tower is provided. The telecommunications tower may have solid walls. The telecommunications tower segment is attachable to other telecommunication tower segments such that a plurality of such telecommunications tower segments can form a tubular section of a telecommunications tower. Furthermore, the telecommunications tower segment has a convex first surface. The telecommunications tower segment further has a second surface opposite to the first surface, wherein the second surface is flat or partly flat.

The telecommunications tower segment may have a first end and a second end, wherein the first surface and the second surface stretch from the first end to the second end, and wherein the telecommunications tower segment has a gradually increasing circumference as seen from the first end to the second end.

Several telecommunications tower segments may be arranged to form a section, and may so describe a common frusto-conical outer surface.

The second surface may comprise one or more open recesses.

The telecommunications tower segment may comprise one or more tubes, or tube-like cavities, running from the first end to the second end.

The telecommunications tower segment may have at least one side fitted with a groove suitable for connecting the telecommunications tower segment to another telecommunications tower segment for enabling the construction of the section of the telecommunications tower.

The telecommunications tower segment may be suited to be connected to other telecommunications tower segments by injection.

The telecommunications tower segment may be approximately 9 meters long, and 2 meters wide at its widest end. Alternatively, the telecommunications tower segment may be approximately 5 meters long, and 2 meters wide at its widest end.

The telecommunications tower segment may preferably, but not necessarily, be made from reinforced concrete.

A telecommunications tower section may comprise a plurality of telecommunications tower segments.

A cross-section of the telecommunications tower section may form an outer circle.

The telecommunications tower section may contain eight telecommunications tower segments as described hereinabove.

The telecommunications tower section may be adapted to form a base section, or ground section, of a telecommunications tower.

According to a second aspect of the invention, a telecommunications tower comprises a plurality of telecommunications tower segments that are adapted to form a telecommunications tower section of said telecommunications tower. Each telecommunications tower segment has a convex first surface and each of said telecommunications tower segments also have a second surface opposite to the first surface. The second surface is flat or partly flat. The shape of the second surface may be a result of the segment having been cast in an open mold.

According to a third aspect of the invention, a method of manufacturing a telecommunications tower segment is given for the construction of a telecommunications tower section of a telecommunications tower. The telecommunications tower segment is cast in an open mold.

According to a fourth aspect of the invention, a method of building a telecommunications tower is given. The method comprises the steps of assembling a plurality of telecommunications tower segments to form a telecommunications tower section; and using the telecommunications tower section as a section of the telecommunications tower.

According to some embodiments, the telecommunications tower is hollow, or tubular.

Brief description of the drawings

Figure 1 shows a cast antenna tower structure.
Figure 2 shows an antenna tower.
Figure 3 shows a sectioning tower base.
Figure 4 shows a cross-section view of a tower section embodiment.
Figures 5-7 show embodiments of segment casting from different angles.

Detailed description

In order to obviate one or more of the disadvantages of previous solutions described *inter alia* hereinabove, a telecommunications tower segment is provided. Such a telecommunications tower segment could preferably be manufactured using a single sided mold and as an example using concrete having 40 MPa compression strength. Such a solution is described/illustrated in fig. 4 to fig. 7.The solution is achieved for example by dividing a full circle into eight segments having an inner cross section shape of an octagonal, that is by maintaining the inside surface flat. The outer surface is preferably kept in the shape as described in fig. 4 to fig. 7, that is a circular cross section of the total base section when mounted together. Elements can of course be made in

more parts but since 8 grounding piles are used to fasten the ground section to the ground symmetry can be achieved giving a more solid construction, 8 is therefore a advantageous choice. 6, 7, 9 and 10 elements are also possible, but size wise and construction requirements put restrictions on higher number of parts while transport restrictions put restrictions to the lower number of segments. Thus, an object of some embodiments of the invention has been to facilitate the manufacturing process of telecom towers. It would also be desirable to reduce manufacturing costs. Additionally, or alternatively, it would be advantageous to provide a solution wherein the outer shape of the tower is not affected. The invention is not limited to the any diameter size of cross section or to any thickness of elements but the numbers given in the figures are only to given to better understand the invention.

Examples of antenna tower structures are those of height of 40 m is used in the examples, though the tower is not by any means limited to the sizes and shapes described in the figures. Other relevant antenna tower structure heights are all from 15 to 55 meters. Minimum base section width size may be 5 meters, but any diameter sizes between 5-10 meters are possible. Other inner cross section shapes are possible as mentioned above, for example hexagonal when choosing 6 elements. Combination of different inner cross section shapes with different outer cross section shapes is also possible. Outer surface sections are formed upon request and can be made to represent a signature as of an operator or to better fit into a landscape view. The inner cross section shape is formed to simplify the manufacturing of elements and to cut down costs. From a business perspective an important aspect of some embodiments of the present invention is to introduce a customer specific antenna tower shape(s), working as a “signature” for an operator. As an alternative aspect, the antenna tower structure may form part of a support for an advertising board. The ground section is further mounted on a foundation or directly attached to the ground preferably by piles or injection piles/poles. Each element may be directly attached to a foundation part or to ground for example by aid of a pole.

Worth to point out also is that if the ground section is divided into having an outer circular shaped surface and inner octagonal shaped surface with 8 identical elements parts with a flat inner surface the field in the middle at a cross section would be thick. In order to reduce costs and weight the elements are molded into a partly hollowed form according to fig. 5-fig. 7.

This is done having taken consideration to the construction requirements and demands. This also makes it possible to run a post tension strand in the middle, fully visible from the inside of the tower, of the element and hence not having eccentrically forces. The elements are attached to each other by aid of an attachment part (see fig. 5). This is achieved by forming at least one side of each element as hollowed out and which can be filled in later on with attaching material, such as more concrete. Both sides of each element are preferably hollowed out. Other attaching methods can be used such as bolting, screwing, gluing etc. Additionally, metal wires or strands can be used around the outer surface to give more stability to the ground section.

Figure 1 depicts an elongated cast antenna tower structure according to the prior art. The structure is laid out in segments, S1-S4, wherein S1 is the base segment. The segments are interconnected in the longitudinal direction by a plurality of elongated fastening members (20) that together form a longitudinal interconnection structure (30) that interconnect the base segment to the terminating segment without gaps in the longitudinal direction, and wherein each segment comprises fastening member guides (50) formed in the wall of the segment and arranged to preserve the fastening members at predetermined configuration with respect to said segment.

Figure 2 depicts a telecommunications tower (200) comprising telecommunications tower sections (100). A telecommunications tower section (100) may comprise telecommunications tower segments (300). The figure provides exemplary measurements of the parts.

Figure 3 depicts a base section (6) of a telecommunications tower (200). According to the figure, the base section (6) may be around 5000 mm in diameter and has a preferred shape of a circle, when viewed from above. 8-12 piles can be used to attach the base section (6) to ground. Alternatively, the base section (6) is directly cast or mould into ground, by aid of a foundation part. The size and shape is not by any way limited to 5000 mm and circle shaped. Other examples of shapes are oval, square, rotating, triangular, rectangular, hexagonal, octagonal etc. The base section (6) includes one or more entrances (8), giving access to an inside part of the antenna tower structure 200. One or more controllable ventilation openings (5) at the base section part (6) permits controllable air intake for air circulation causing a cooling mechanism inside the telecommunications tower (200). The base section 6 (bottom section), which may be hollow, is large enough to fit most equipment configurations in an indoor environment. The base section 6 is typically insulated, and that insulation is attached in mould and fitted while the sections are being cast. Electrical conduits are placed in the mould as well as other details. A benefit of having a hollow construction is avoidance of a separate shelter. Requirement for site fence is also avoided due to tower base natural scale protection and anti climbing geometry. As an alternative, the base section (6) is built in separate parts which are to be put together on place.

Figure 4 depicts a telecommunications tower section (100) comprising telecommunications tower segments (300). Each segment has a flat or partly flat surface (320), as well as convex surface (310) opposite of the flat surface. According to some embodiments, the section (100) has a varying circumference, such as being smaller in one end. This shape could resemble a cone, as illustrated by the dashed circles in figure 4.

Figure 5 depicts a telecommunications tower segment (300), as seen from two different angles, in two different scales. The figure further shows a mould (350) suitable for casting the segment. The top drawing is a side view of the mould, shown with an exemplary length measurement. The length is measured from the first end (510) to the

second end (520). The segment may be cast using vibrators to vibrate the mould, in order to achieve a more homogeneous cast.

The bottom drawing of figure 5 is a side view of the segment and the mould, as seen from the second end (520). As an exemplary measurement, the second end (520) may measure 2 meters, at its widest direction. In some embodiments, there is a groove (330), at the side or sides of the segment. A groove can be constructed by fitting the mould with an attachment part (500) at either or both sides. It is advantageous to have a groove at both said sides, in order to facilitate assembly of a section. A groove is useful for connecting a segment to another segment or another structure. Connecting segments can be done by means of injection, e.g. using concrete or another material with some adhesive properties. Alternatively or additionally, a segment may be fitted with grooves for connecting the section of the segment to an adjacent section.

Figure 6 also depicts a telecommunications tower segment and a casting mould, as seen from two different angles, in two different scales. According to embodiments illustrated in this figure, there is an attachment part (500) fitted to one or both sides of the mould. The attachment parts are fitted using a joint (340), which permits the operation of the attachment parts so as to create a groove while casting, and subsequently remove the attachment parts for easy removal of the segment once finalized by turning the attachment parts around the joint. Also illustrated in figure 6 is the insertion of one or more tubes (600) running from the first end (510, dashed in the figure) to the second end (520). The usage of tubes allows for running fastening members, in order to connect a segment to another. An alternative use of the tubes may be for running cables.

Figure 7 also depicts a telecommunications tower segment (300) and a casting mould (350), as seen from two different angles, in two different scales. By inserting one or more recesses (700) to the flat or partly flat surface (320), material can be saved during the cast without significant drawbacks. A recess can be created by milling or otherwise removing material from the segment. Alternatively, a recess may be created during

construction of the segment by means of inserting one or more foreign bodies into a cast, so as to prevent casting material from entering the areas where a recess is wanted.

As used herein, the term solid is taken to mean a molded structure, as opposed to a lattice structure. Furthermore the terms section and segment are in the art used interchangeably. When describing the present invention, a section may comprise a plurality of segments, as follows from the attached claims.

The terminology used herein is for the purpose of describing particular embodiments only and is not intended to be limiting of the invention. As used herein, the singular forms "a", "an" and "the" are intended to include the plural forms as well, unless the context clearly indicates otherwise. It will be further understood that the terms "comprises" "comprising," "includes" and/or "including" when used herein, specify the presence of stated features, integers, steps, operations, elements, and/or components, but do not preclude the presence or addition of one or more other features, integers, steps, operations, elements, components, and/or groups thereof.

Unless otherwise defined, all terms (including technical and scientific terms) used herein have the same meaning as commonly understood by one of ordinary skill in the art to which this invention belongs. It will be further understood that terms used herein should be interpreted as having a meaning that is consistent with their meaning in the context of this specification and the relevant art and will not be interpreted in an idealized or overly formal sense unless expressly so defined herein. The present invention has been described above with reference to specific embodiments. However, other embodiments than those described are possible within the scope of the invention. The different features and method steps of the invention can be combined in other combinations than those described. The invention is only limited by the appended patent claims.

Claims

1. A telecommunications tower segment (300) for the construction of a section (100) of a telecommunications tower (200) with solid walls, wherein the telecommunications tower segment (300) is attachable to other telecommunication tower segments (301, 302) such that a plurality of such telecommunications tower segments (300,301, 302, ...) can form a tubular section (100) of the telecommunications tower, and wherein the telecommunications tower segment has a convex first surface (310), **characterized in that**
the telecommunications tower segment has a second surface (320) opposite to the first surface, wherein the second surface is flat or partly flat.

2. The telecommunications tower segment (300) of claim 1, further characterized in that the telecommunications tower segment has a first end (510) and a second end (520),
and in that the first surface (310) and the second surface (320) stretch from the first end (510) to the second end (520)
wherein the telecommunications tower segment has a gradually increasing circumference as seen from the first end (510) to the second end (520).

3. The telecommunications tower segment (300) of claim 2, further characterized in that the telecommunications tower segment (300) is attachable to at least one other telecommunications tower segment (301, 302) of the same or similar kind as the telecommunications tower segment (300) such that several such telecommunications tower segments (300, 301, 302) are arranged to form a telecommunications tower section (100), which section (100) is adapted to describe a frusto-conical outer surface (310, 311, 312 ...).

4. The telecommunications tower segment of any preceding claim, further characterized in that the second surface comprises one or more open

recesses.

5. The telecommunications tower segment of claim 2 to 4, further characterized in that the telecommunications tower segment comprises one or more tubes running from the first end to the second end.

6. The telecommunications tower segment of any preceding claim, further characterized in that the telecommunications tower segment has at least one side fitted with a groove suitable for connecting the telecommunications tower segment to another telecommunications tower segment for enabling the construction of the section of the telecommunications tower.

7. The telecommunications tower segment of claim 6, further characterized in that the telecommunications tower segment is suited to be connected to other telecommunications tower segments by injection.

8. The telecommunications tower segment of any preceding claim, further characterized in that the telecommunications tower segment is approximately 9 meters long, and 2 meters wide at its widest end.

9. The telecommunications tower segment of any preceding claim, further characterized in that the telecommunications tower segment is made from reinforced concrete.

10. A telecommunications tower section (100) comprising a plurality of telecommunications tower segments (300, 301, 302…) according to any preceding claim.

11. The telecommunications tower section according to claim 10, further characterized in that a cross-section of the telecommunications tower section

forms an outer circle.

12. The telecommunications tower section of claim 10, further characterized in that the telecommunications tower section contains eight telecommunications tower segments according to any of the claim 1 to 9.

13. The telecommunications tower section of claims 10 to 12, further characterized in that the telecommunications tower section is adapted to form a base section of a telecommunications tower.

14. A telecommunications tower (200) with solid walls, comprising a plurality of telecommunications tower segments (300) that is adapted to form a telecommunications tower section (100) of said telecommunications tower, and wherein each telecommunications tower segment has a convex first surface (310),
characterized in that
each of said telecommunications tower segments have a second surface (320) opposite to the first surface, wherein the second surface is flat or partly flat.

15. A method of manufacturing a telecommunications tower segment (300) for the construction of a telecommunications tower section (100) of a telecommunications tower (200) with solid walls, **characterized in that**
the telecommunications tower segment is cast in an open mold.

16. A method of building a telecommunications tower (200) with solid walls, characterized in that the method comprises the steps of

- assembling a plurality of telecommunications tower segments (300) according to any of claims 1 to 10 to form a telecommunications tower section (100)
- using the telecommunications tower section as a section of the telecommunications tower.

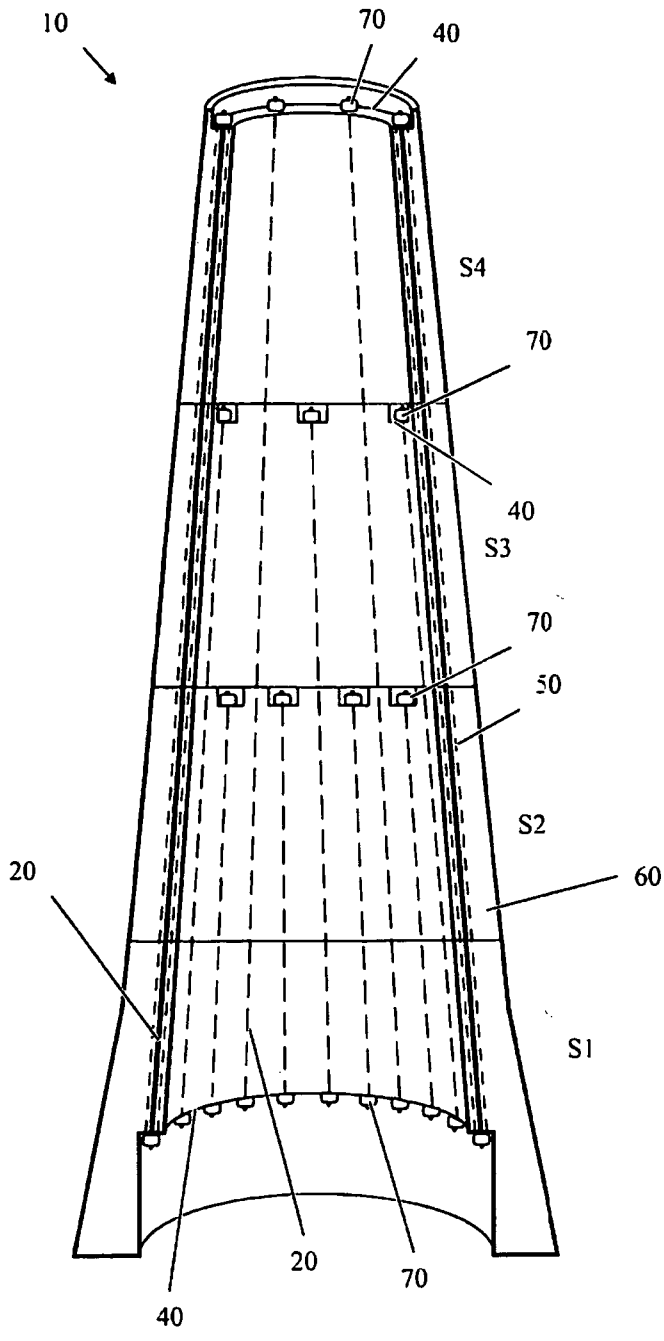

Fig. 1a

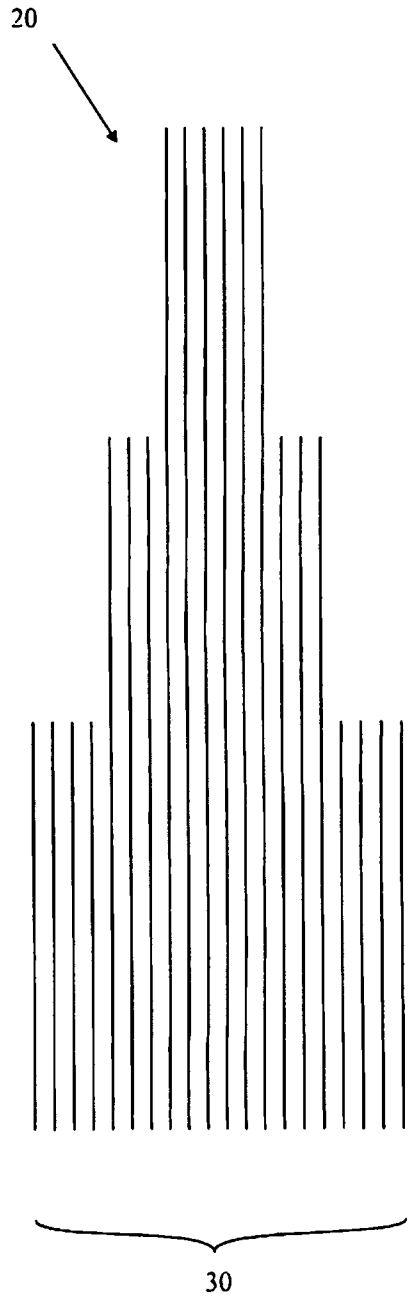

Fig. 1b

FIG. 1

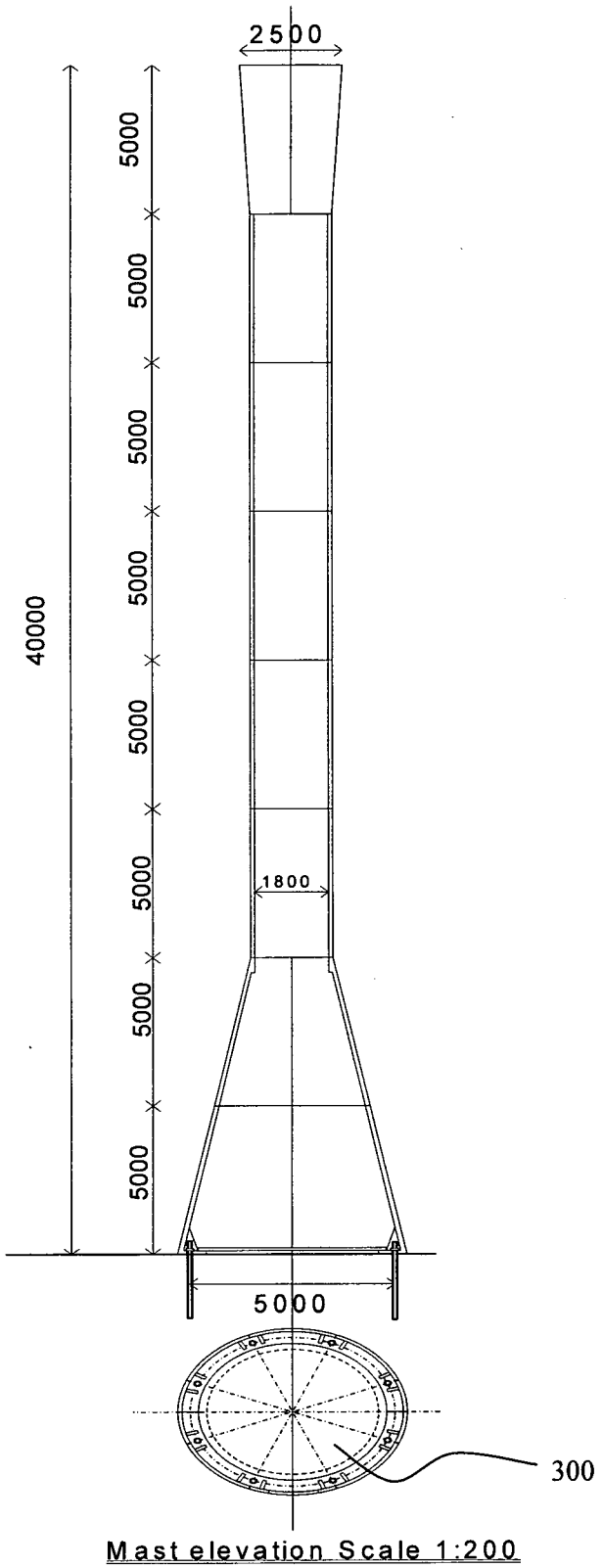

Mast elevation Scale 1:200

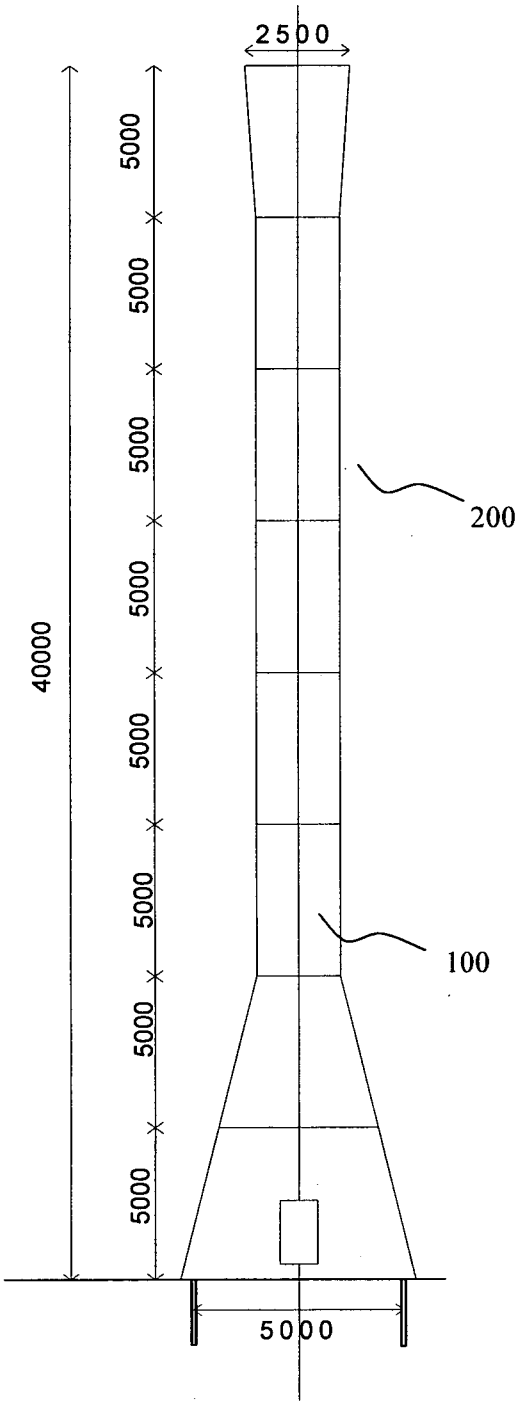

Mast elevation Scale 1:200

FIG. 2

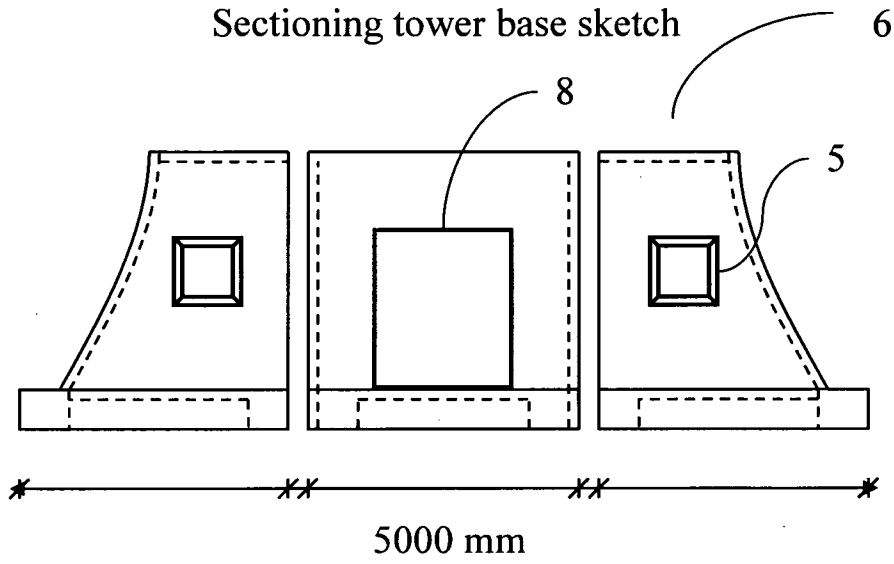

FIG. 3

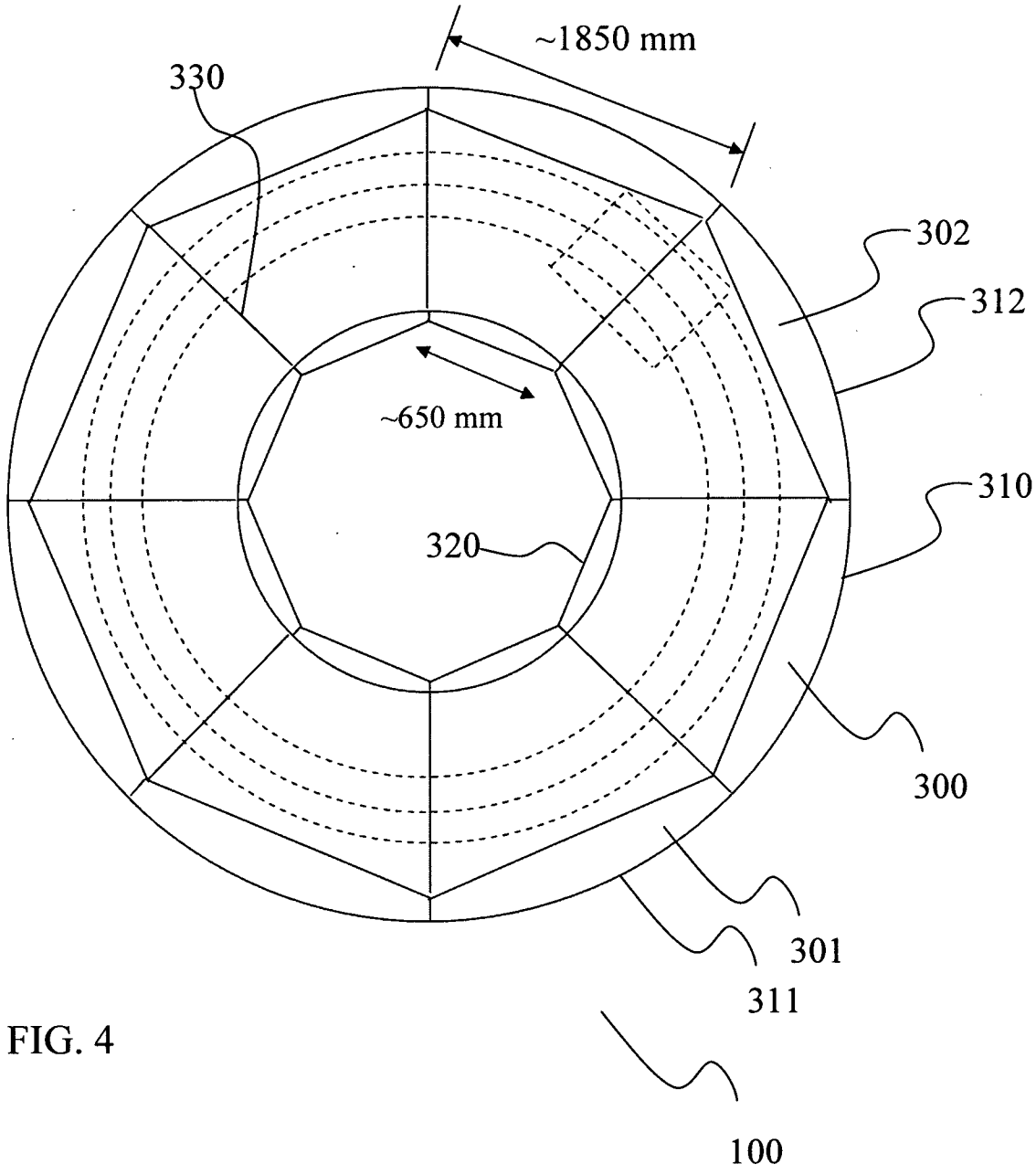

FIG. 4

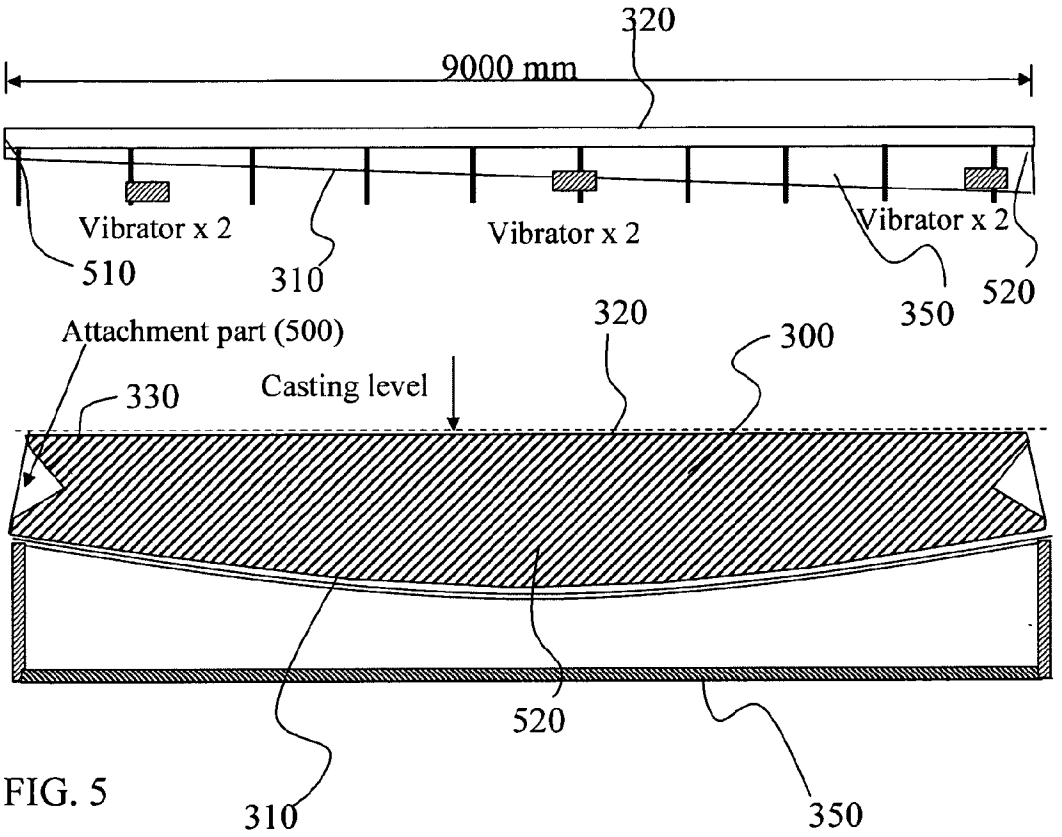
320
9000 mm
Vibrator x 2
Vibrator x 2
Vibrator x 2
510
310
350
520
Attachment part (500)
320
300
330
Casting level
520
310
350

FIG. 5

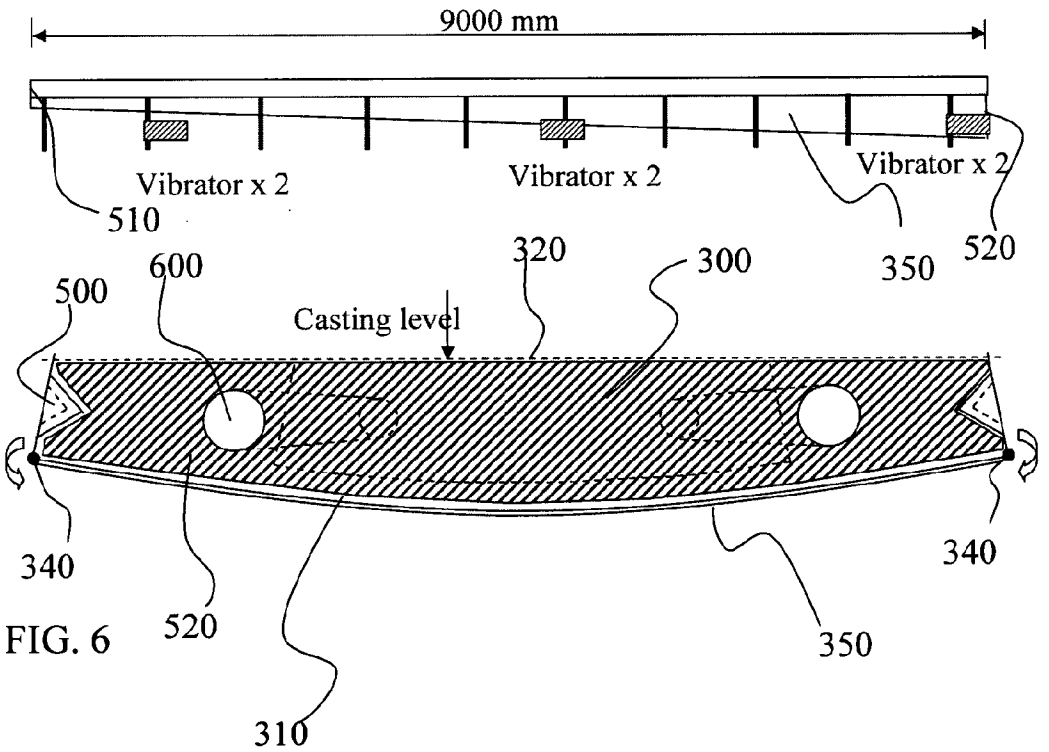
9000 mm
Vibrator x 2
Vibrator x 2
Vibrator x 2
510
350
520
600
320
300
500
Casting level
340
340
520
350
310

FIG. 6

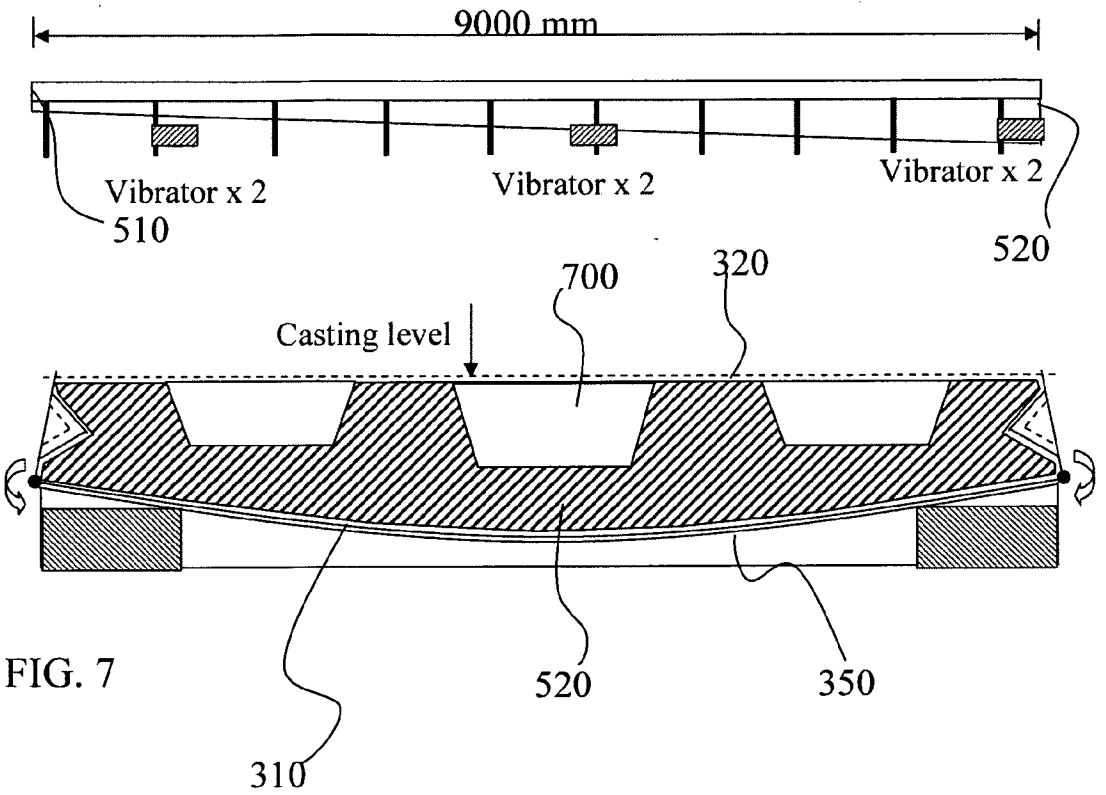
9000 mm
Vibrator x 2
510
Vibrator x 2
Vibrator x 2
520
700
320
Casting level
520
350
310

FIG. 7

INTERNATIONAL SEARCH REPORT

International application No.
PCT/SE2009/051391

A. CLASSIFICATION OF SUBJECT MATTER

IPC: see extra sheet
According to International Patent Classification (IPC) or to both national classification and IPC

B. FIELDS SEARCHED

Minimum documentation searched (classification system followed by classification symbols)

IPC: H01Q, E04H, B28B

Documentation searched other than minimum documentation to the extent that such documents are included in the fields searched

SE,DK,FI,NO classes as above

Electronic data base consulted during the international search (name of data base and, where practicable, search terms used)

EPO-INTERNAL, WPI DATA, PAJ

C. DOCUMENTS CONSIDERED TO BE RELEVANT

Category*	Citation of document, with indication, where appropriate, of the relevant passages	Relevant to claim No.
A	WO 2008136717 A1 (TELEFONAKTIEBOLAGET LM ERICSSON (PUBL)), 13 November 2008 (13.11.2008), cited in the application --	1-16
A	DE 102006042910 A1 (ED. ZÜBLIN AG), 27 March 2008 (27.03.2008), figures 1,2, abstract --	1-16
A	FR 879654 A (ELIN AKTIENGESELLSCHAFT FÜR ELEKTRISCHE INDUSTRIE), 2 March 1943 (02.03.1943), whole document --	1-16
A	US 3922135 A (HALLER ET AL), 25 November 1975 (25.11.1975), abstract --	1-16

☐ Further documents are listed in the continuation of Box C. ☒ See patent family annex.

* Special categories of cited documents:
"A" document defining the general state of the art which is not considered to be of particular relevance
"E" earlier application or patent but published on or after the international filing date
"L" document which may throw doubts on priority claim(s) or which is cited to establish the publication date of another citation or other special reason (as specified)
"O" document referring to an oral disclosure, use, exhibition or other means
"P" document published prior to the international filing date but later than the priority date claimed
"T" later document published after the international filing date or priority date and not in conflict with the application but cited to understand the principle or theory underlying the invention
"X" document of particular relevance: the claimed invention cannot be considered novel or cannot be considered to involve an inventive step when the document is taken alone
"Y" document of particular relevance: the claimed invention cannot be considered to involve an inventive step when the document is combined with one or more other such documents, such combination being obvious to a person skilled in the art
"&" document member of the same patent family

Date of the actual completion of the international search	Date of mailing of the international search report
21 June 2010	23 -06- 2010
Name and mailing address of the ISA/ Swedish Patent Office Box 5055, S-102 42 STOCKHOLM Facsimile No. +46 8 666 02 86	Authorized officer Rune Bengtsson / JA A Telephone No. +46 8 782 25 00

International patent classification (IPC)

E04H 12/12 (2006.01)
B28B 7/16 (2006.01)
H01Q 1/12 (2006.01)

Download your patent documents at www.prv.se
The cited patent documents can be downloaded:

- From "Cited documents" found under our online services at www.prv.se (English version)
- From "Anförda dokument" found under "e-tjänster" at www.prv.se (Swedish version)

Use the application number as username. The password is **RCCVVEKUVJ.**

Paper copies can be ordered at a cost of 50 SEK per copy from PRV InterPat (telephone number 08-782 28 85).

Cited literature, if any, will be enclosed in paper form.

WO	2008136717	A1	13/11/2008	NONE
DE	102006042910	A1	27/03/2008	NONE
FR	879654	A	02/03/1943	NONE
US	3922135	A	25/11/1975	NONE