Dec. 15, 1964 M. KOPEC ETAL 3,161,392

NURSING BOTTLE HOLDER

Filed April 10, 1963 2 Sheets-Sheet 1

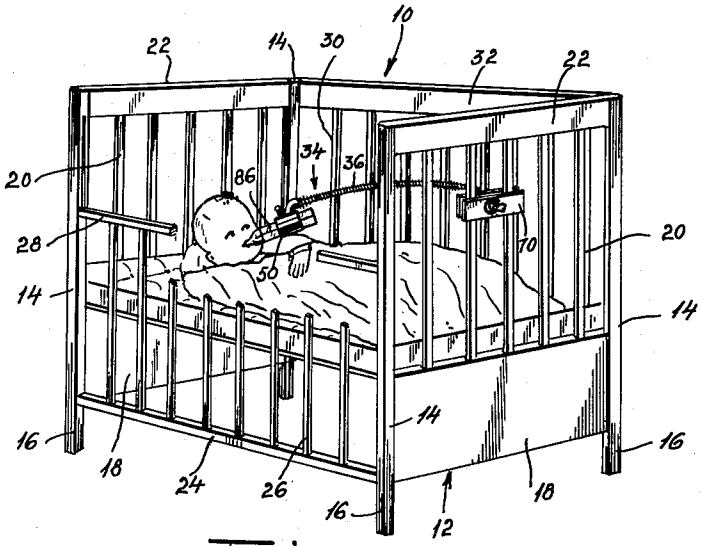

Fig. 1.

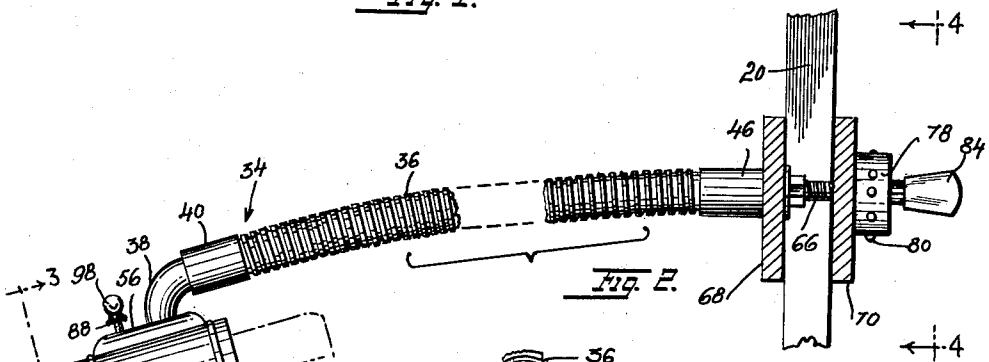

Fig. 2.

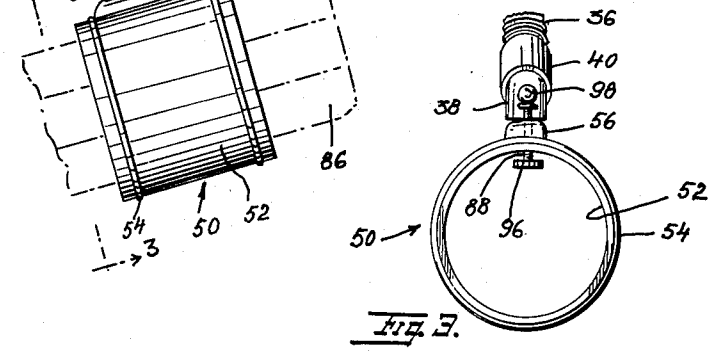

Fig. 3.

INVENTORS
MEL KOPEC
BEN MONSHER

BY

Zoltan A. Polacheck

ATTORNEY

Dec. 15, 1964 M. KOPEC ETAL 3,161,392

NURSING BOTTLE HOLDER

Filed April 10, 1963 2 Sheets-Sheet 2

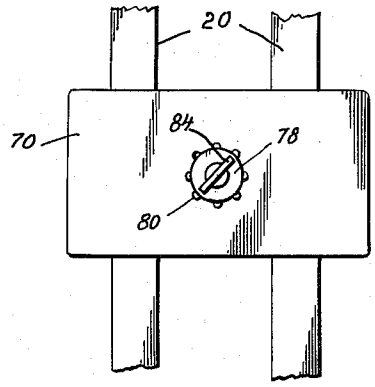

Fig. 4.

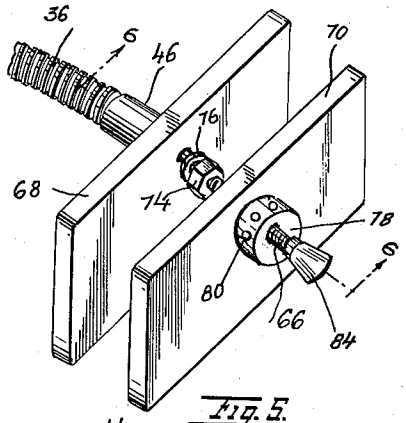

Fig. 5.

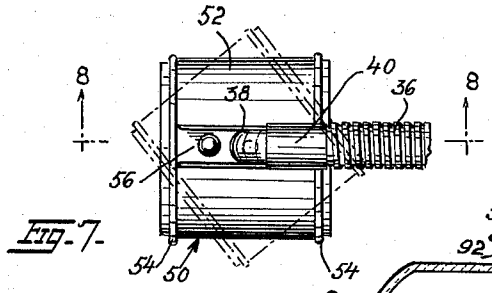

Fig. 7.

Fig. 8.

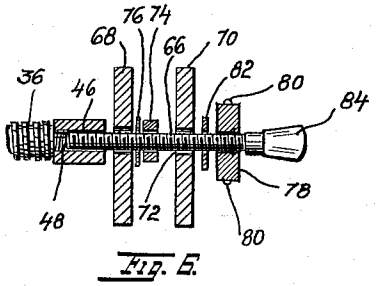

Fig. 6.

INVENTORS
MEL KOPEC
BEN MONSHER

BY Zoltan A. Polachek

ATTORNEY

United States Patent Office 3,161,392 Patented Dec. 15, 1964

3,161,392

NURSING BOTTLE HOLDER

Mel Kopec, 550 Chester St., and Ben Monsher, 693 Bristle St., both of Brooklyn, N.Y.

Filed Apr. 10, 1963, Ser. No. 272,124
3 Claims. (Cl. 248—104)

This invention relates generally to bottle holders and more particularly to new and useful improvements in an extensible and flexible holder assembly for supporting an infant's nursing bottle from a baby crib, carriage or the like.

A principal object of the present invention is to provide an extensible and flexible bottle holder assembly adapted to be secured to a stationary part of a baby crib, carriage or the like and to reach to a point adjacent an infant in the crib or carriage, supporting a nursing bottle at a desired angle.

Another object is to provide a bottle holder that is swivelly mounted to permit the infant to turn its head with the bottle in its mouth.

Another object of the invention is to provide such an extensible and flexible bottle holder assembly that can readily be swung away from the infant when not in use.

A further object is to provide novel means for readily mounting the bottle holder assembly on a stationary part of a baby crib, carriage or the like.

It is a further object of the invention to provide novel means for readily mounting the bottle holder assembly to a stationary part of a baby crib, carriage or the like, which means includes a rod coupling device including a socket for the rod with spaced cylindrical rods for holding the rod in clamped condition.

It is also an object of the invention to provide a flexible and extensible holder assembly for a nursing bottle that is simple in construction, inexpensive to manufacture, sanitary, convenient and practical in use.

For further comprehension of the invention, and of the objects and advantages thereof, reference will be had to the following description and accompanying drawings, and to the appended claims in which the various novel features of the invention are more particularly set forth.

In the accompanying drawings forming a material part of this disclosure:

FIG. 1 is a top perspective view of a baby crib with a nursing bottle holder assembly embodying the invention applied thereto, a nursing bottle being shown in supported condition and in the mouth of an infant, parts being shown broken away.

FIG. 2 is an enlarged elevational view of the bottle holder assembly in extended condition, a bottle being shown in dot-dash lines, parts being shown broken away.

FIG. 3 is a vertical sectional view taken on the line 3—3 of FIG. 2.

FIG. 4 is a view looking from the right of FIG. 2, as seen from the line 4—4 of FIG. 2.

FIG. 5 is a spread perspective view of the parts shown in FIG. 4.

FIG. 6 is a sectional view taken on the line 6—6 of FIG. 5.

FIG. 7 is a top plan view of the bottle holder proper, the holder being shown in moved condition in dot-dash lines.

FIG. 8 is a sectional view taken on the line 8—8 of FIG. 7, showing a bottle in clamped condition.

Referring to the drawings in detail, the invention is illustrated in connection with a crib 10 having a rectangular-shaped body 12 composed of corner posts 14 forming supporting legs 16 at the bottom. Wooden panels 18, 18 extend across the space between the corner posts at the ends of the body. Posts 20 extend upwardly from

the top edges of the end panels 18, 18 and are joined by top rails 22. One side of the body is formed with a bottom rail 24 extending between the adjacent corner posts 14 supporting upstanding spaced posts 26. A top rail 28 extends across the top ends of the posts 26. The rails 24 and 28 and posts 26 constitute a sliding frame. The other side of the body is composed of upright posts 30 with a fixed bottom rail (not shown) extending across the bottom ends thereof and with a fixed top rail 32 extending across the top ends.

The invention comprises an extensible and flexible nursing bottle holder assembly 34 of gooseneck formation. The assembly includes an elongated round flexible metal cable 36 of tubular coiled formation adapted to flex and to bend in various directions and angles. An elbow joint 38 is connected to one end of the cable by means of a threaded tubular connecting sleeve 40. The elbow joint is closed at its outer end by an end disc 42 having a central threaded hole 44 therein. The other end of the cable carries a sleeve 46 with a threaded bore 48.

A nursing bottle holder 50 is swivelly connected to the elbow joint 38. The holder 50 has a hollow cylindrical body 52 open at both ends. Reinforcing annular ribs 54 are formed on the outside surface of the body adjacent its ends. The swivel connection between the elbow joint 38 and the body 52 of the holder includes a narrow plastic supporting platform 56 having bent ends supported on the body to raise the platform away from the body as shown in FIG. 8. The ends of the plate are suitably fastened to the body. The body of the holder 50 is formed with a semispherical seat 51 in line with a hole 53 in the platform 56. A metal ball 55 is loosely seated in the seat 51. A threaded stem 57 is connected at one end to the ball. The other end of the stem extends through the hole 53 in the platform and is threaded into the hole 44 of disc 42. A swivel connection is thus provided between the body of the holder 50 and the end of the cable 36. The body of the holder is shown turned in dot-dash lines in FIG. 7.

The bottle holder assembly 34 with holder 50 attached is adapted to be mounted on the upstanding posts of the crib 10. In FIG. 1, the assembly is shown mounted on the posts 20 at one end of the crib. This mounting consists of an elongated screw 66 having one end threaded into the bore 48 of sleeve 46 on the end of the cable 36. A pair of clamping bars 68 and 70 are slidably mounted on the screw 66, the screw passing loosely through holes 72 in the center of the bars. Bar 68 is placed inside a pair of adjacent posts and bar 70 on the outside thereof, with the screw 66 extending between the posts. A lock nut 74 and washer 76 clamps the inner bar 68 against the end of the sleeve 46 and a locknut 78 with short protuberances 80 thereon and washer 82 clamp the outer bar 70 against the posts. The outer end of the screw 66 is formed with a wing-shaped finger piece 84 for manipulating the screw.

An important feature of the invention is means for clamping the nursing bottle 86 to the body of the holder 50. For this purpose, an elongated screw 88 extends through a hole 90 in the platform 56 and through an aligned countersunk hole 92 in the body of the holder 50. A threaded bushing 94 is fitted in the hole 92. A clamping disc 96 is carried at the bottom of screw 88 in the countersunk portion of hole 92 for clamping engagement with the surface of the bottle. A spherical head 98 larger than the hole in the plate is formed on the outer end of the screw to manipulate the same. The screw 88 thus serves as a set screw for clamping the bottle against the body of the holder.

The bottle is shown provided with a combined pacifier and stopper 100.

It will be understood that the cable 36 may be swung

to various positions according to the circumstances to assist in positioning the bottle **86** conveniently near the infant and to hold the bottle at the proper inclination or angle for the proper discharge of the milk. The swivel mounting permits the infant to move its head with the bottle in its mouth without interference. The bottle holder assembly thus enables the bottle to be properly held under various conditions and without the liability of the bottle becoming displaced.

While we have illustrated and described the preferred embodiment of our invention, it is to be understood that we do not limit ourselves to the precise construction herein disclosed and that various changes and modifications may be made within the scope of the invention as defined in the appended claims.

Having thus described our invention, what we claim as new, and desire to secure by United States Letters Patent is:

1. A nursing bottle holder assembly comprising an elongated flexible cable of coiled tubular formation having an elbow joint at one end thereof, a hollow cylindrical bottle support swivelly connected to said elbow joint, said elbow joint having an end disc with a hole therein, a raised platform fixedly mounted on the bottle support, said platform having a hole in line with the hole in the end disc of the elbow joint, and a swivel joint between the body of the holder and the cable including a ball loosely seated in the body of the holder and a threaded stem radiating from the ball and extending through the aligned holes.

2. A nursing bottle holder assembly comprising an elongated flexible cable of coiled tubular formation having an elbow joint at one end thereof, a hollow cylindrical bottle support swivelly connected to said elbow joint, said elbow joint having an end disc with a hole therein, a raised platform fixedly mounted on the bottle support, said platform having a hole in line with the hole in the end disc of the elbow joint, a swivel joint between the body of the holder and the cable including a ball loosely seated in the body of the holder and a threaded stem radiating from the ball and extending through the aligned holes, and means for detachably mounting the other end of the cable on a crib, said mounting including a sleeve carried at said other end, said sleeve having a central threaded bore, an elongated screw having one end in the threaded bore, a pair of spaced bars slidably mounted on the screw, said bars adapted to be placed inside and outside stationary parts of a crib, and a lock nut for clamping the stationary parts of the crib between the clamping bars.

3. A nursing bottle holder assembly comprising an elongated flexible cable of coiled tubular formation having an elbow joint at one end thereof, a hollow cylindrical bottle support swivelly connected to said elbow joint, said elbow joint having an end wall with a hole therein, a raised platform fixedly mounted on the bottle support, said platform having a hole in line with the hole in the end wall of the elbow joint, a swivel joint between the body of the holder and the cable including a ball loosely seated in the body of the holder and a threaded stem radiating from the ball and extending through the aligned holes, and means for detachably mounting the other end of the cable on a crib, said mounting including a sleeve carried at said other end, said sleeve having a central threaded bore, an elongated screw having one end in the threaded bore, a pair of spaced bars slidably mounted on the screw, said bars adapted to be placed inside and outside stationary parts of the crib, a lock nut on the screw for clamping the inside bar against the sleeve and a lock nut on the screw for clamping the parts of the crib between the clamping bars.

References Cited in the file of this patent

UNITED STATES PATENTS

1,271,994	Barlow	July 9, 1918
1,739,909	Livergood	Dec. 17, 1929
2,110,037	De Rosa	Mar. 1, 1938
2,258,076	Taylor et al.	Oct. 7, 1941
2,448,189	Mott	Aug. 31, 1948
2,470,694	Foo	May 17, 1949
2,794,289	Sanford	June 4, 1957