Aug. 30, 1955 J. K. MARTIN 2,716,380

SPRAY DAMPENING SYSTEM FOR LITHOGRAPHIC OFFSET PRINTING PRESSES

Filed Nov. 2, 1953 2 Sheets-Sheet 1

FIG. 1

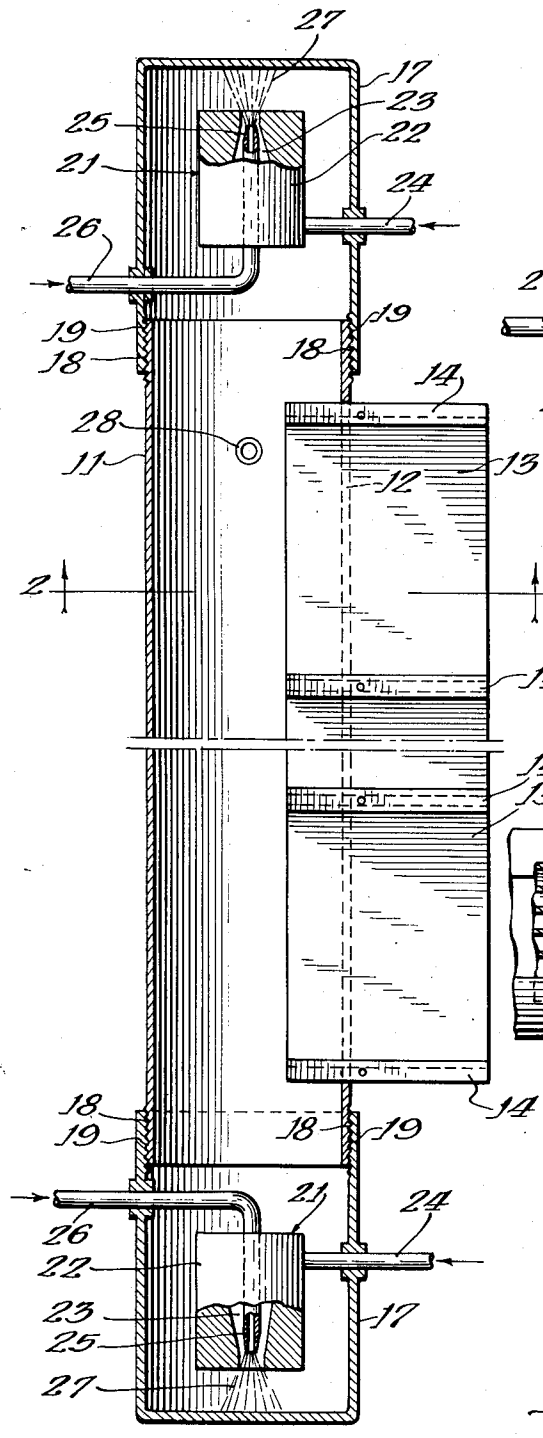

FIG. 2

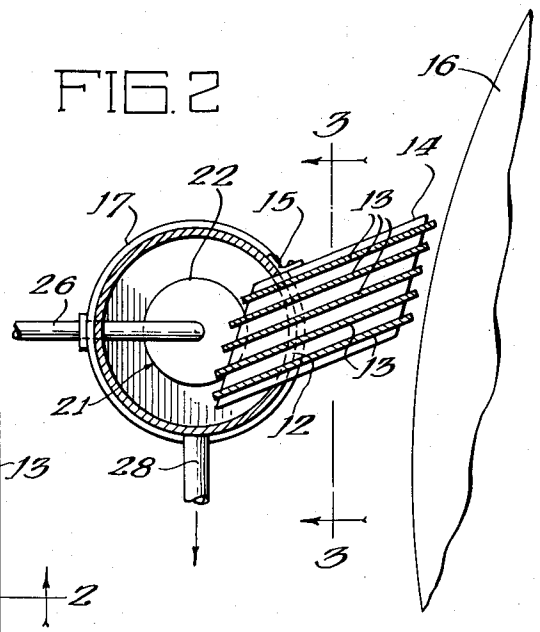

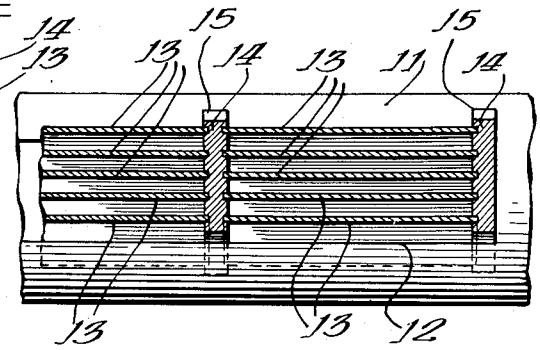

FIG. 3

Inventor:
James K. Martin
By: Carl L. Lloyd
Attorney:

Aug. 30, 1955 J. K. MARTIN 2,716,380

SPRAY DAMPENING SYSTEM FOR LITHOGRAPHIC OFFSET PRINTING PRESSES

Filed Nov. 2, 1953 2 Sheets-Sheet 2

FIG. 4

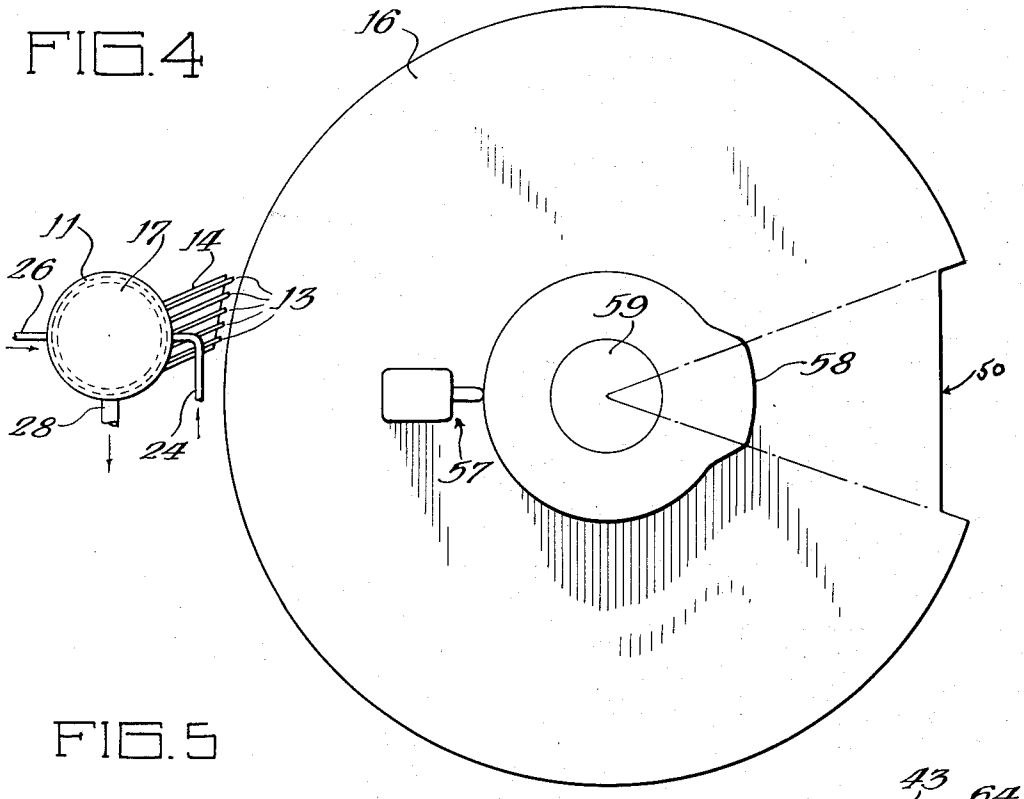

FIG. 5

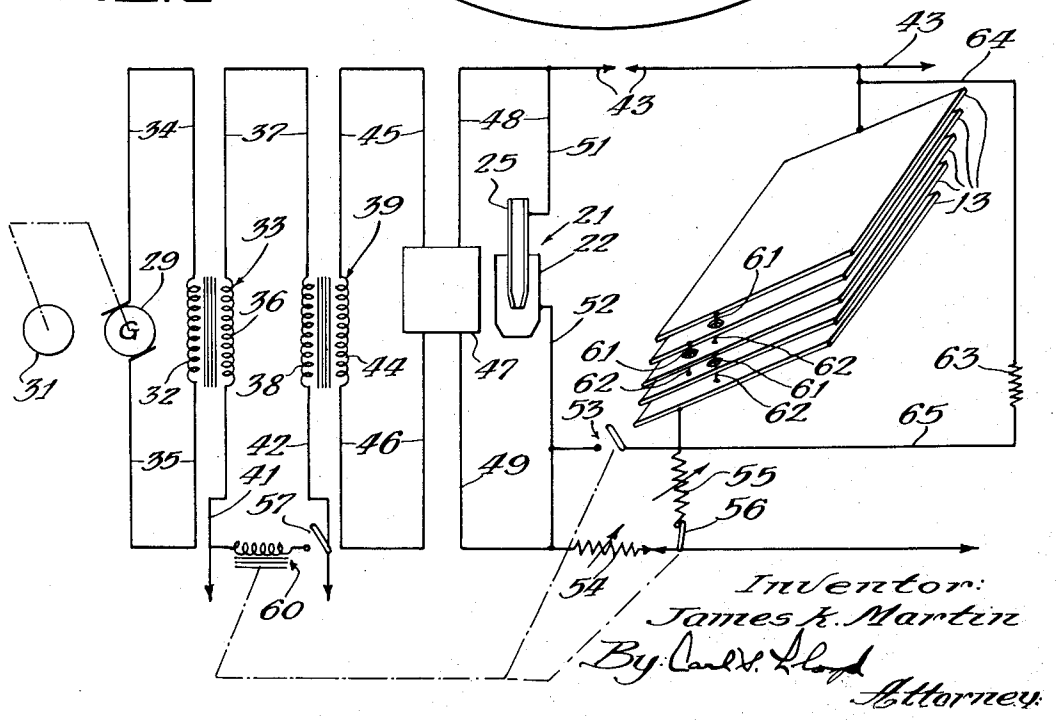

Inventor:
James K. Martin
By Carl S. Lloyd
Attorney.

United States Patent Office 2,716,380
Patented Aug. 30, 1955

2,716,380

SPRAY DAMPENING SYSTEM FOR LITHOGRAPHIC OFFSET PRINTING PRESSES

James K. Martin, Chicago, Ill., assignor to Lithographic Technical Foundation

Application November 2, 1953, Serial No. 389,740

6 Claims. (Cl. 101—147)

This invention relates to spray dampening equipment for lithographic offset presses whereby, as is customary in such printing, the surfaces of the printing plates are dampened before the printing ink is applied thereto in order to prevent adhesion of the ink to those parts of such surfaces on which no printing image appears.

Various types of dampening devices for this purpose have been employed in the past but they have all had faults or shortcomings of one sort or another and it is the general purpose of the present invention to provide a spray dampening system which is superior in efficiency and operating results to those that have heretofore been devised and which overcomes the principal difficulties that have been involved in their use.

One object of the invention is to provide a spray dampening system in which the amount of the spray can be automatically regulated with respect to the press speed.

Another object is to provide such a system in which the spray is automatically cut off at the cylinder gap.

A further object is to provide a spray dampener in which the spray is directed electrostatically to the plate cylinder only.

It is also an object of my invention to provide apparatus for the purpose stated in which the spray may be controlled around and across the cylinder.

An additional object is to provide a system of this character in which the chance of plugging of the spray devices is eliminated or greatly reduced.

Other objects and advantages of the invention will be evident from the following description, taken in connection with the accompanying drawings, in which:

Fig. 1 is a view, partly in horizontal section and partly in plan of an elongated container or chamber in which the spray medium is formed and from which it is directed to the printing cylinder between electrically charged metal plates, some of which are shown protruding from the chamber;

Fig. 2 is a cross-sectional view of the chamber and of a bank of the plates, taken substantially on the section line 2—2 in Fig. 1;

Fig. 3 is a detail sectional view, partly broken away, of the bank of plates, showing the members by which they are supported and by which sets of the plates are insulated from each other;

Fig. 4 is an end view of a printing cylinder and applicable spraying apparatus, showing the means by which the spray is cut off at the cylinder gap; and

Fig. 5 is a combined wiring diagram and schematic view of the principal elements of the system whereby the spray medium is electrically charged and partially precipitated.

Before describing in further detail the apparatus thus illustrated, some of the above-mentioned difficulties with existing dampening systems, and prior attempts to overcome them, will be referred to, since it is believed this will be helpful in understanding the problems involved and

the ways in which they are solved by the present invention.

It has been found in the use of the customary dampening rollers that they have a tendency to pick up ink and deposit scum on the printing plates; the over-all control of the moisture is dependent on the precision of the dampening rollers, which is difficult to maintain; specific control across the cylinder is dependent on conditions that are hard to reproduce and there has been no satisfactory method of controlling the moisture around the cylinder; present methods require considerable make-ready time to reach an equilibrium; the cloth coverings commonly used on the dampening rollers introduce lint which may cause printing imperfections; foreign matter, such as ink, may be transferred back to the reservoir, thus requiring, in some cases, frequent adjustments and filtering; and there has been no satisfactory way of automatically controlling the amount of moisture in relation to press speeds.

In attempting to overcome these difficulties various schemes have been tried, falling generally into two categories, namely (1) those in which the plates are sprayed by a series of nozzles and (2) those in which the spray medium is introduced into a chamber running parallel to the plate cylinder and having a slot through which the spray is directed to the cylinder. Both schemes have been subject to the general objections that: no method is provided to stop the spray at the cylinder gap, with the result that corrosion of the cylinder clamps becomes a problem; no method is provided to automatically control the volume of the spray with relation to press speeds; there is no way to confine the spray to the plates, with the result that parts of the press in close proximity to the plate cylinder, as well as the paper, are undesirably moistened; and there is no method of controlling the spray around the cylinder, which is sometimes to be desired, as when a solid and a halftone are being run in the same section around the cylinder. A further specific objection with respect to the first-mentioned of these schemes, namely the use of a multiplicity of spray nozzles, is that, since the sprays must be fine to avoid flooding the plate, plugging of the orifices becomes a problem. Another specific objection with respect to the second-mentioned of such schemes, namely, spraying from a slotted chamber, is that control across the cylinder is difficult because shutting off one section of the slot to stop delivery of the spray increases the pressure inside the chamber, thereby unduly increasing the amount of the spray in the open areas.

As hereinabove stated, it is the purpose of my invention to solve these problems and overcome the above objections to prior and existing dampening systems by means of the system illustrated (more or less diagrammatically) in the above-described figures of the accompanying drawings.

Referring first to Figs. 1 and 2 of said drawings, the reference numeral **11** indicates an elongated container or chamber (of any desired but preferably cylindrical form) having a longitudinal opening **12** in one side thereof and having a series of spaced metal plates **13** extending through said opening and protruding a considerable distance therefrom, said plates, as shown, being disposed in upwardly inclined arrangement with quite substantial space therebetween. The plates, which are made of suitable metal to receive an electrical charge, are arranged in a plurality of sets or banks lengthwise of the chamber, and the plates of each set are supported by bars **14** of suitable insulating material, so that the sets of plates are insulated from each other. Said bars **14** are recessed to receive the edges of the plates **13** and are suitably supported by the chamber **11**. The means for attachment

thereof are not shown in detail since any suitable devices for this purpose may be used, but supporting straps or brackets **15**, the arms of which are riveted to the container **11** and one of the end bars **14**, respectively, may be used, one thereof being shown in Fig. 2.

The container or chamber **11** is suitably supported adjacent a plate cylinder **16** of a printing press and, as shown in Fig. 1, is broken away centrally to indicate that it may be of any suitable length and arranged to carry any appropriate number of sets or banks of the plates **13** as varying press types and sizes may dictate. As shown in Fig. 1, the ends of the chamber **11** are closed by removable caps or closure members **17** which, as illustrated, are provided with screw-threaded portions **18** adapted to screw onto mating portions **19** on the body of the chamber.

For the purpose of introducing a charged spray or aerosol into the chamber **11**, two atomizers **21** are shown in the chamber near the opposite ends thereof. They each comprise an air nozzle in the form of a block **22** having a conical chamber **23** therein connected with an intake pipe **24** leading from a source of compressed air; and a liquid nozzle **25** connected with a pipe **26** leading from a reservoir (not shown) or other source of liquid, which may be water or a suitable liquid solution such as, for example, ammonium bichromate. The air will normally be under pressure of, say, 10 to 20 pounds per square inch and the liquid may be fed by gravity to the atomizer. Between the air nozzle **22**, **23** and the liquid nozzle **25** a source of potential is provided and connected, as shown, by way of example, in the wiring diagram of Fig. 5. In this connection it should be noted that the container or chamber **11**, **17** may be of insulating material, such as polyethylene, so that proper electrical connections, as shown in said Fig. 5, may be made to said nozzles.

The sprays emitted from the atomizers **21** are indicated at **27** and are preferably directed against the ends of the chamber from which the spray medium is diffused into the interior of the chamber. The atomizers thus operate on the principle of space chargers. It will be evident that other means of obtaining a charged spray could be employed if preferred.

A drain pipe **28** is provided, leading from the bottom of the chamber, as shown in Figs. 2 and 4 of the drawings.

The charged spray is forced by the pressure in the chamber out between the plates **13** and onto the printing element on the cylinder **16**. An electrical charge is placed on these plates, its purpose being to either attract or repel the charged vapor particles so that a greater or less amount thereof will be precipitated as conditions require, and the volume of the spray reaching the plates on the printing cylinder thus controlled. Since the plates are arranged in a plurality of sets or segments lengthwise of the spray chamber the potential applied to the different sets of plates may be varied if desired and the quantity of the spray which is precipitated thus controlled across the cylinder.

The means for charging the plates of course could be varied to meet particular conditions, but one embodiment is shown for illustrative purposes in Fig. 5 of the drawings, in which a D. C. generator **29** is shown as being mechanically coupled to the drive motor **31** of the press, although it will be evident that it could be coupled to some other rotating element of the press if desired. The output of this generator is applied to the primary winding **32** of a saturable core reactor, generally indicated at **33**, being connected thereto by wires **34** and **35**. The secondary winding **36** of the reactor is connected in series, by wiring **37**, with the primary winding **38** of a power transformer, generally indicated at **39**, and with an A. C. power source, the lead to which is indicated by the numeral **41**. The primary **38** of said power transformer **39** is also connected with the A. C. power source, by a lead **42**. The output of the power generator **39** is applied to the spray control plates **13**, one set of which is shown in said Fig. 5, the arrows **43** indicating that it may be similarly applied to other sets or units as called for by the particular installation.

The output of the power transformer **39** may be applied to the control plates either directly or through a rectifier. In the embodiment shown, the secondary **44** of the transformer is connected by leads **45** and **46** with a rectifier **47** which, in turn, is connected by leads **48** and **49** with the plates, the atomizer or space charger **21** being interposed between these leads by means of wires **51** and **52**.

Control of the spray is provided by means of a normally open switch **53** and a variable resistor **54** and specific unit control by a variable resistor **55** and a normally closed switch **56**.

A normally open cam switch **57** (Figs. 4 and 5) is provided in one of the leads to the A. C. power source and is adapted to be operated by a cam **58** on the shaft **59** of the plate cylinder **16**. Closing of this switch activates a ralay **60** which closes the switch **53** and opens the switch **56** to cut off the spray at the cylinder gap. When said switch **57** is open so that no current is flowing through the relay **60**, and with switch **53** open and the switch **56** closed (as they normally are), current is forced to go through the general control resistor **54** and the individual unit control resistor **55**. Since these resistors limit the voltage reaching the plates **13**, and the volume of the spray is in inverse order to such voltage, the proper amount of spray will be applied to the plate cylinder **16** when the above-described condition of the switches **57**, **53** and **56** prevails. On the other hand, when the switch **57** is closed by the cam **58**, current passes through the relay **60** and this causes the switch **53** to be closed and the switch **56** to be opened, thus taking the resistors **54** and **55** out of the circuit and allowing full voltage to be applied to the control plates **13**, thereby stopping the spray. It will be evident that the cam **58** is so located with respect to the cylinder gap **50** (customarily provided for purposes of margin and of plate attachment) that the switch **57** will be periodically closed at such times as the cylinder gap is opposite the spraying device. In a normal installation the particle velocity and the dimensions and relationship of the plates may be such that the time for complete condensation of the spray on the plates will be on the order of one-half second. The cam **58** is so formed that the switch **57** will be closed a sufficient time before the cylinder gap reaches a position opposite the spray area that the cut-off will take place at the right time.

The plates **13** are electrically connected together, the connections being shown at **61** and **62**. As shown, they are wired so that every other plate would have the same charge and those between would have an opposite charge, but, if desired, they could be wired so that all of the plates would have the same charge.

A fixed "leak" resistor **63** is, or may be, connected across the control plates **13**, by wires **64** and **65**, to insure a more uniform load and thus aid in securing proper control.

When the press speed increases, the volume of the spray should increase to provide adequate dampening of the plates. In the present system this result is accomplished since as the press speeds up the generator speed increases correspondingly. As it runs faster its D. C. voltage will increase. This increased voltage, when applied across the primary of the saturable core reactor **33**, will increase the reactance, thereby decreasing the amount of A. C. voltage that can flow through the secondary **36** of the reactor. Since said secondary is in series with the primary winding **38** of the power transformer **39**, the voltage output of the transformer will thereupon decrease, thus decreasing the voltage on the spray control plates **13**. Since the amount of spray which gets through these plates is inverse to the voltage applied to the plates, an increase in the volume of the spray will thus be obtained.

From the foregoing description it will be apparent that I have not only thus provided a system whereby the amount of the spray will be automatically regulated with respect to press speed but one in which the various other objects hereinabove set forth are attained and in which the principal difficulties of systems heretofore used are overcome. It will also be evident, and is to be understood, that various changes and modifications in the above described illustrative embodiment of the invention may be made without departing from the principles of the invention or the scope of the appended claims.

I claim:

1. A spray dampening system for lithographic offset presses comprising: an elongated chamber arrangeable in proximity to a printing cylinder adapted to carry a printing plate or medium to be dampened and having a lengthwise outlet slot therein opening toward said cylinder; means for providing in said chamber an electrically-charged dampening spray medium under pressure; a series of substantially parallel metal plates fixedly supported by the chamber and so disposed in relation to said slot that the spray medium must pass between them in moving from said chamber toward said cylinder; means for placing an electrical charge on said plates to cause precipitation of a controlled quantity of the charged particles of said dampening spray medium; means for placing an electrical charge on said spray medium; and means for varying the strength of the electrical charge of a given polarity on said plates with respect to the charge on said spray medium.

2. A spray dampening system for lithographic offset presses comprising: an elongated chamber arrangeable in proximity to a printing cylinder adapted to carry a printing plate or medium to be dampened and having an outlet opening therein opposite said cylinder, means for providing in said chamber an electrically-charged dampening spray medium under pressure; a series of spaced metal plates so disposed in relation to said outlet opening that the spray medium must pass between them in moving from said chamber toward said cylinder; means for placing an electrical charge on said plates to cause precipitation of a controlled quantity of the charged particles of said dampening spray medium; means for placing an electrical charge on said spray medium; and means for varying the strength of the electrical charge of a given polarity on said plates with respect to the charge on said spray medium.

3. A spray dampening system for lithographic offset presses comprising: an elongated chamber arrangeable in proximity to a printing cylinder adapted to carry a printing plate or medium to be dampened and having an outlet opening therein opposite said cylinder; means for providing in said chamber an electrically-charged dampening spray medium under pressure; a series of metal plates so disposed in relation to said outlet opening that the spray medium must pass between them in moving from said chamber toward said cylinder; means for placing an electrical charge on said plates to cause precipitation of a controlled quantity of the charged particles of said dampening spray medium; means for placing an electrical charge on said spray medium; means for varying the strength of the electrical charge of a given polarity on said plates with respect to the charge on said spray medium; and means controlled by the speed of the press for automatically regulating the spray to cause the amount thereof to increase or decrease with increase or decrease in the speed of the press.

4. A spray dampening system for lithographic offset presses comprising: an elongated chamber arrangeable in proximity to a printing cylinder adapted to carry a printing plate or medium to be dampened and having an outlet opening therein opposite said cylinder; means for providing in said chamber an electrically-charged dampening spray medium under pressure; a series of metal plates so disposed in relation to said outlet opening that the spray medium must pass between them in moving from said chamber toward said cylinder; means for placing an electrical charge on said plates to cause precipitation of a controlled quantity of the charged particles of said dampening spray medium; means for placing an electrical charge on said spray medium; means for varying the strength of the electrical charge of a given polarity on said plates with respect to the charge on said spray medium; and means controlled by the speed of the press for automatically regulating the spray to cause the amount thereof to increase or decrease with increase or decrease in the press speed while the pressure in the chamber remains substantially constant.

5. A spray dampening system for lithographic offset presses comprising: an elongated chamber arrangeable in proximity to a printing cylinder (having the customary cylinder gap) adapted to carry a printing plate or medium to be dampened and having an outlet opening therein opposite said cylinder; means for providing in said chamber an electrically-charged dampening spray medium under pressure; a series of metal plates so disposed in relation to said outlet opening that the spray medium must pass between them in moving from said chamber toward said cylinder; means for placing an electrical charge on said plates to cause precipitation of a controlled quantity of the charged particles of said dampening spray medium; means for placing an electrical charge on said spray medium; means for varying the strength of the electrical charge of a given polarity on said plates with respect to the charge on said spray medium; electrical means including a switch and voltage control means for increasing the voltage on said plates when said cylinder gap is opposite the spray area to thereby cause substantially complete precipitation of the spray on the plates and thus cut off said spray; and a rotating element on said press for controlling said last mentioned means.

6. A spray dampening system for lithographic offset presses comprising: an elongated chamber arrangeable in proximity to a printing cylinder adapted to carry a printing plate or medium to be dampened and having a lengthwise slot therein opening toward said cylinder; means for providing in said chamber an electrically-charged dampening spray medium under pressure; a series of metal plates so disposed in relation to said outlet opening that the spray medium must pass between them in moving from said chamber toward said cylinder, said plates being arranged in sets lengthwise of the chamber with the sets insulated from each other; means for placing an electrical charge on said plates to cause precipitation of a controlled quantity of the charged particles of said dampening spray medium, said means including devices whereby the charge on different sets of the plates may be varied with the pressure on the spray medium passing through all said sets of plates remaining substantially constant; means for placing an electrical charge on said spray medium; and means for varying the strength of the electrical charge of a given polarity on said plates with respect to the charge on said spray medium.

References Cited in the file of this patent

UNITED STATES PATENTS

2,287,837	Smyser	June 30, 1942
2,586,480	Ras	Feb. 19, 1952
2,590,429	Ras	Mar. 25, 1952