May 7, 1946. G. H. MILES 2,400,017

MEANS FOR ACTUATING AIRCRAFT CONTROL SURFACES

Filed March 26, 1943

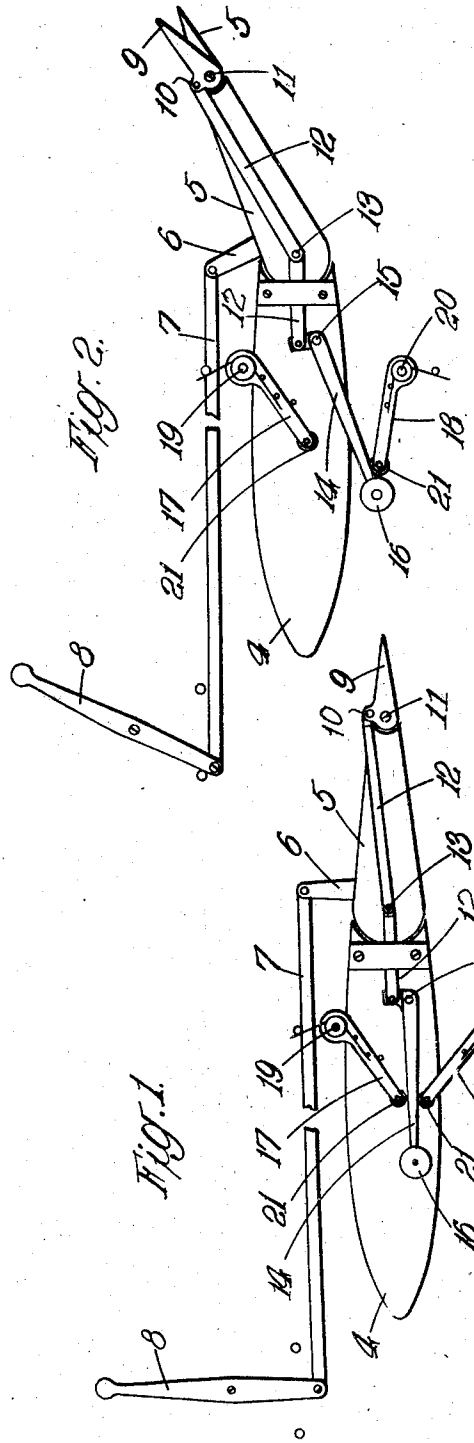

Fig. 1.

Fig. 2.

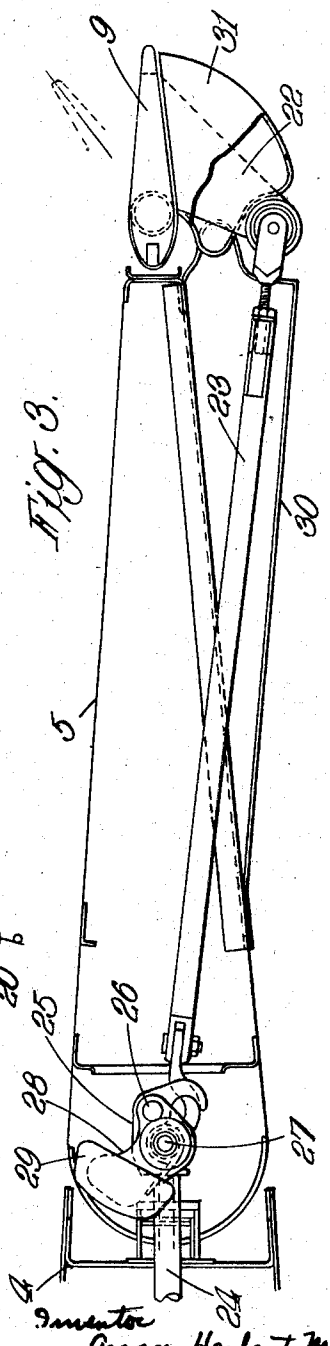

Fig. 3.

Inventor
George Herbert Miles
by Stevens and Davis
His Attorneys

Patented May 7, 1946 2,400,017

UNITED STATES PATENT OFFICE

2,400,017

MEANS FOR ACTUATING AIRCRAFT CONTROL SURFACES

George Herbert Miles, Reading, England, assignor to Miles Aircraft Limited, Reading, England

Application March 26, 1943, Serial No. 480,696
In Great Britain December 30, 1941

3 Claims. (Cl. 244—76)

The present invention consists in safety means for limiting the control moment exertable by an aircraft adjustable control surface comprising an inertia-sensitive mass operatively associated with the control surface to exert a reaction moment tending to limit the control moment applicable by the control surface within safe limits having regard to the stress characteristics of the aircraft.

Conveniently, the inertia-sensitive mass is operatively associated with the control surface through an auxiliary tab operatively associated with the control surface.

In order that it may be clearly understood and readily carried into effect, the invention is hereinafter described with reference to the accompanying diagrammatic drawing, of which:

Figure 1 shows schematically an arrangement according to the present invention;

Figure 2 corresponds to Figure 1 but shows the apparatus in a position in which the inertia-sensitive mass has initiated a correction action, which in this instance may be regarded as applicable to elevator control when the associated aircraft is being pulled too violently out of a dive; while

Figure 3 is a side elevation of a practical embodiment of the invention.

Referring first to Figure 1, it can be regarded that the reference numeral 4 indicates the fixed tailplane surface with respect to which the elevator 5 is movable in the ordinary way. For operating the elevator, the elevator has extending from it a lever 6 which is coupled by a link 7 to the pilot-operable control column 8. In the arrangement now under review, the tab 9 is provided at the trailing edge of the elevator 5. The tab 9 is in fact mounted so that it may move angularly with respect to the elevator 5, being connected thereto in any convenient manner. Tabs mounted on elevator and other main control surfaces (e. g. rudders, flaps and ailerons) are well known. In practice, if the trimmer tab 9 is turned clockwise about the axis which connects it to the elevator 5, it operates to swing the elevator 5 anticlockwise about the pivot. Likewise, if the tab 9 is moved anticlockwise it sets the elevator clockwise.

Operation of the tab 9 is intended to be entirely automatic, and it will be observed that the tab 9 has a pivot 10 somewhat offset from the axis 11 about which the tab swings in relation to the elevator. Connected to the pivot 10 is a tab-actuating link 12 which has a pivot connection 13 coincident with the axis about which the elevator swings. The tab-actuating link 12, however, extends forwardly and is coupled to the bell-crank lever 14, itself swingable about a pivot 15. At its forward end the bell-crank lever 14 carries an automatic tab control weight 16. Despite the tab control weight 16, the bell-crank lever 14 is normally centralised into a substantially horizontal setting by upper and lower loading arms 17 and 18, respectively. The upper loading arm 17 is urged anticlockwise about its pivot 19 by any convenient form of torsion spring; while the lower loading arm 18 is similarly urged clockwise about the pivot 20. The torsion springs are appropriately chosen to achieve substantial balance of the tab control weight in order to prevent any movement of it such as would result in operation of the tab 9 relatively to the elevator 5 until such time as the tab control weight is subject to predetermined excessive loads.

The invention will now best be understood with reference to the manner of operation and by comparison of Figure 2 with Figure 1. Thus, one can regard the position shown in Figure 1 as the normal elevator setting for level flight. If now it be regarded that the aircraft is diving with its elevator set as shown in Figure 1 and the pilot wants to pull the craft out of its dive, he pulls the control column 8 back towards the position shown in Figure 2, by which operation he puts the link 7 in tension, turns the lever 6 anticlockwise about its axis and sets the elevator 5 upwardly, as shown in Figure 2. Provided the moment which the elevator exercises to pull the aircraft out of its dive is not excessive having regard to the stress characteristics of the aircraft, the tab 9 will remain unaffected in regard to its relationship to the elevator 5; but on the other hand if the pull-out is excessive to such an extent as to cause the tab control weight 16 to swing the bell-crank lever anticlockwise towards the position shown in Figure 2, the tab 9 is set upwardly in relation to the elevator 5, with the result that the effort applied through the control member 8 is opposed, in consequence of which there is at least a tendency for any excessive degree of applied elevator to be taken off.

The point at which the tab 9 begins to be effective is determined by the designer according to the nature of the machine with which he is concerned. Thus, on highly-manoeuvrable and fast combat aircraft adequately stressed, the tab 9 would probably begin to operate only under the influence of inertia loads on the weight 16 of the order of 5 or 6 g., the arms 17 and 18 being loaded accordingly. For less highly-stressed aircraft the

loading of the arms 17 and 18 could be appropriately reduced.

The arms 17 and 18 are preferably each provided with a roller 21 for cooperation with the shank of the bell-crank lever 16.

That part of the control mechanism shown in Figures 1 and 2 which is operatively associated with the tab 9 can be wholly enclosed within the aircraft skin. Thus, if the anchorages for the loading arms 17 and 18 are naturally required to be disposed outside the profile of the fixed tailplane surface, then those anchorages can be arranged centrally so that the arms swing up and down in the plane of the fixed tail fin, the lower arm 18 and its anchorage being if necessary within the tail end of the fuselage.

The arrangement shown in Figures 1 and 2 would be equally effective against excessive inertia loads urging the weight 18 upwardly or downwardly.

Whereas in the arrangement shown with reference to Figures 1 and 2 the moment exerted by the tab 9 under aerodynamic influence may merely serve to oppose the pull-out effort applied by the pilot to give him adequate warning that he is operating the control 8 too violently, it may be preferable to take off any excessive application of elevator or similar control applied by the pilot automatically; although even then it may still be preferred to leave it possible for the pilot to override the safety control in extreme urgency.

Figure 3 illustrates an arrangement in which excessive applied elevator control is immediately reduced or taken off by operation of the tab. Thus in Figure 3 the elevator 5 is actuated entirely by the tab 9. Therefore, to set the elevator 5 upwardly to lower the tail of the aircraft in relation to its flight path, the tab 9 is set downwardly, which operation swings the elevator 5 up about its mounting on the fixed tailplane, the trailing end of which is seen at 4 in Figure 3. To set the tab downwardly about its pivot axis on the elevator 5, the tab-actuating lever 22 requires to be moved clockwise, and the tab-actuating rod 23 is therefore placed in tension by manipulation of the jack plunger 24 by pilot-operable control means (not shown). At its more rearward end the jack plunger is provided with a hook-shaped fitting 25 which mounts the pivot 26. The forward end of the tab-actuating rod 23 is not connected directly to the jack but is coupled to the spindle 27 which interconnects two weighted arms laterally spaced one at each side of the hook fitting 25; one of which arms is represented by the reference numeral 28, the weights being indicated by the reference numeral 29. The weighted arms 28 are spring-loaded upwardly by spring means operating in torsion, so that the arms assume the position indicated by the reference numeral 28 in Figure 3 in all normal circumstances, and, in such setting, operation of the jack plunger sets the control tab as desired by the pilot to achieve the appropriate elevator control.

If, however, an excessive inertia load is induced upon the weights 29, as will inevitably occur if the pilot tends to pull a fast and highly-manoeuvrable machine too violently out of its dive, the weighted arms 28 swing downwards anticlockwise about the pivot 26. In other words, if it be assumed that the pilot attempts by manipulation of the tab 9 to set the elevator 5 upwardly to too great an extent, the weighted arms 29 swing down and so set the tail of the tab 9 upwardly in relation to the elevator, in consequence of which the excessively applied elevator is reduced to within predetermined safe limits.

The tab-actuating rod 23 is preferably enclosed by a fairing duct 30; while the tab-actuating lever 22 is similarly enclosed by the fairing 31.

The invention is not confined to its application to elevators, for it might very well operate ailerons to prevent over-stressing in exceptionally tight turns; while, yet again, the invention may be usefully applicable to flap and rudder control. Although the safety means hereinbefore described exemplify the invention as an arrangement in which the inertia-sensitive mass operates directly upon the tab, it may be desirable for the inertia-sensitive mass to control a valve operating in turn to ensure the application of a progressive force to the control system or to the tab by means of a fluid pressure system.

What I claim is:

1. In aircraft including means defining a control surface adjustable in position to cause a change in the direction of movement of the aircraft and a tab pivotally mounted on the trailing edge of said means; a safety device comprising, means including a pivotally mounted weight responsive to a predetermined rate of change of direction influenced by said control surface defining means for adjusting the angular position of said tab to reduce the magnitude of the adjustment of the control surface defining means so as to hold the control moment exertable thereby within safe limits.

2. In aircraft including means defining a control surface adjustable in position to cause a change in the direction of movement of the aircraft and a tab pivotally mounted on the trailing edge of said means; a safety device comprising, a weight pivotally mounted about an axis at right angles to the long axis of the aircraft for movement in response to those changes in aircraft direction influenced by said control surface defining means, a linkage connected to said tab for adjusting the angular position thereof in response to movement of said weight, the direction of movement of said weight controlling the direction of adjustment of said tab, and resilient means normally holding said weight in a position corresponding to the normal flight position of said tab, said resilient means being loaded to yield to a predetermined inertia of said weight caused by a predetermined rate of change of direction of said aircraft whereby to cause adjustment of said tab to hold the control moment exertable by said control surface defining means within safe limits.

3. In aircraft including means defining a control surface and a tab pivotally mounted on the trailing edge thereof; a safety device comprising a pilot operated jack, a tab control rod for adjusting said tab to effect servo control of said control surface defining means to thereby cause a change in the direction of movement of the aircraft, means including a pivoted weight connecting the jack to the control rod, the position of the weight controlling the effective length of said rod, and resilient means normally holding said weight in a predetermined position, said resilient means being loaded to yield to a predetermined inertia of said weight caused by a predetermined rate of change of direction of said aircraft whereby to modify the adjustment of said tab so as to hold the control moment exertable by said control surface defining means within safe limits.

GEORGE HERBERT MILES.