Feb. 25, 1941. L. H. SMITH 2,233,037

CATHODE RAY IMAGE PROJECTING DEVICE

Filed Aug. 29, 1940 2 Sheets-Sheet 1

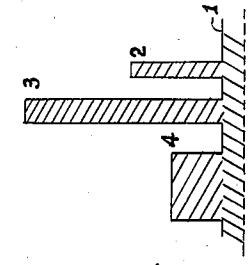

FIG. 3

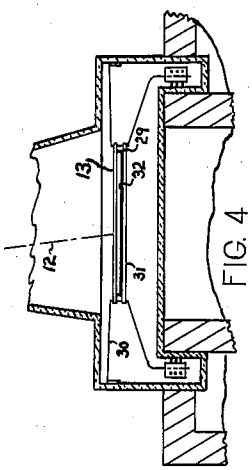

FIG. 4

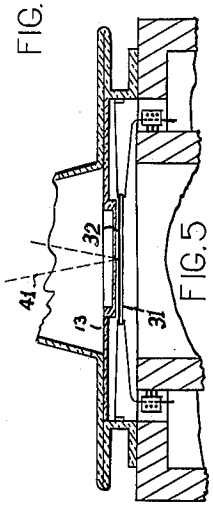

FIG. 5

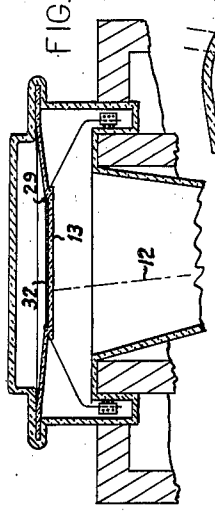

FIG. 6

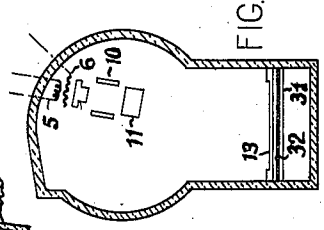

FIG. 7

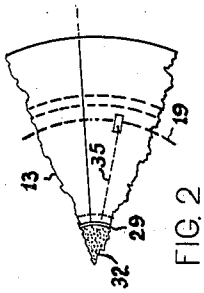

FIG. 2

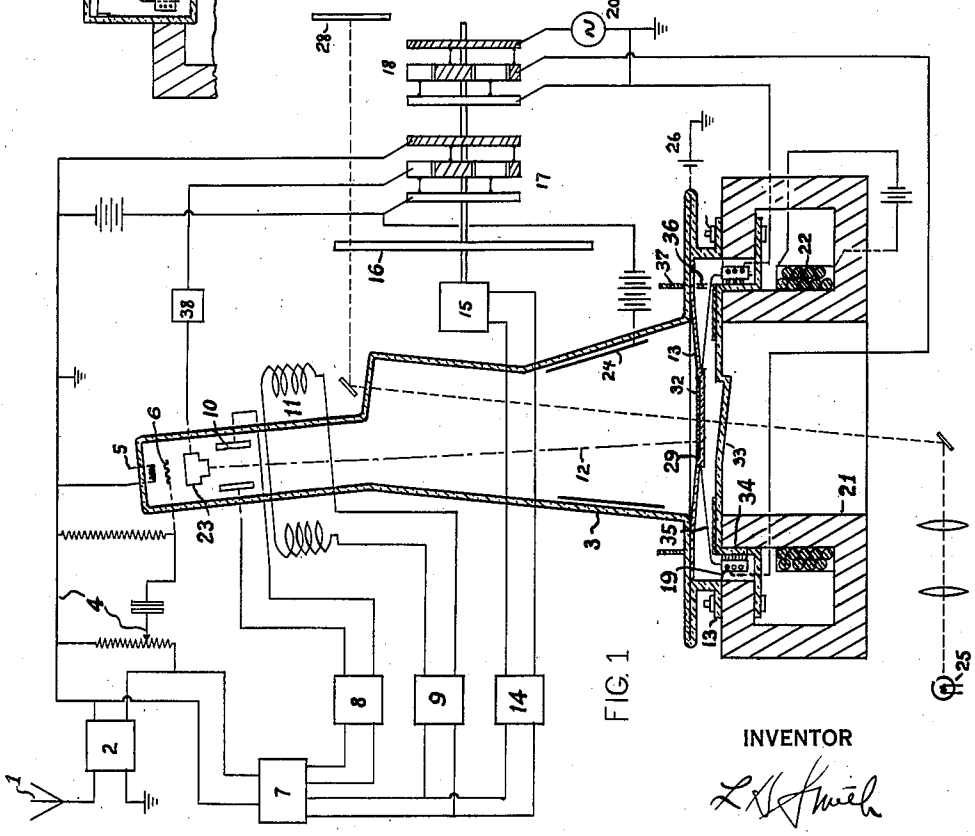

FIG. 1

INVENTOR

L. H. Smith

Feb. 25, 1941. L. H. SMITH 2,233,037

CATHODE RAY IMAGE PROJECTING DEVICE

Filed Aug. 29, 1940 2 Sheets-Sheet 2

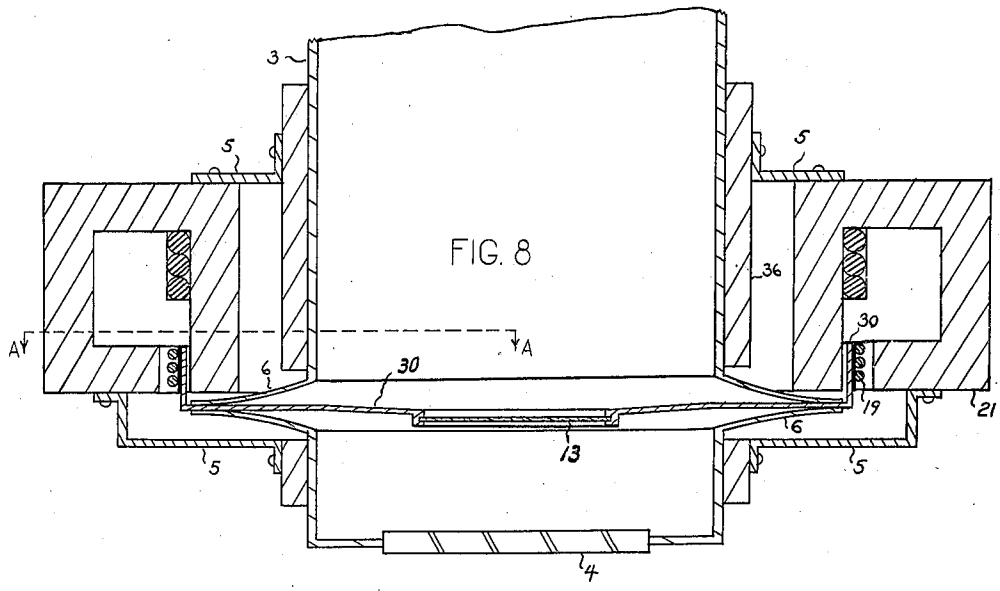

FIG. 8

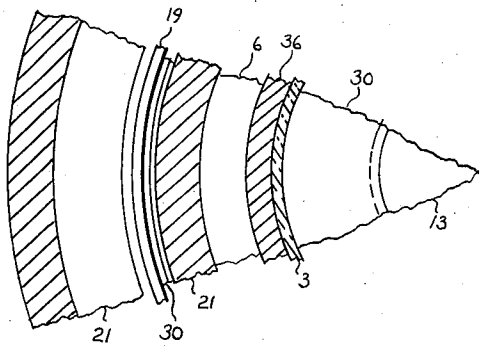

FIG. 9

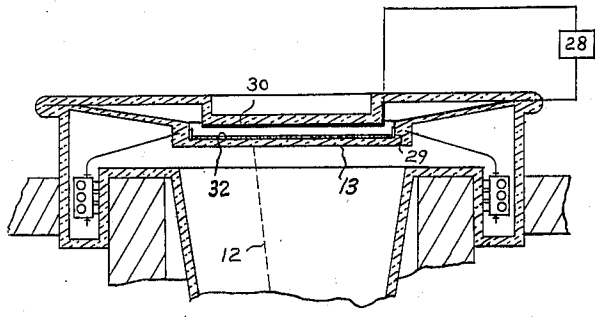

FIG. 10

INVENTOR

L. H. Smith

Patented Feb. 25, 1941 2,233,037

UNITED STATES PATENT OFFICE

2,233,037

CATHODE RAY IMAGE PROJECTING DEVICE

Lester H. Smith, Maplewood, N. J.

Application August 29, 1940, Serial No. 354,629

18 Claims. (Cl. 178—7.5)

This invention relates to improvements in systems for the reception of picture scanning signals.

The improvements proposed are particularly concerned with the system of projecting a light image from a cathode ray scanning device described in my previous application No. 299,611. The cathode ray image projecting device covered in my previous application includes a vibratory horizontal image forming surface upon which is deposited an electric image by the scanning beam. A layer of opaqe image forming particles on the image forming surface becomes ionized when the image surface is vibrated and the particles are agitated, resulting in their distribution on the surface in accordance with the electric image deposited by the scanning beam. Since the electric image charges deposited by the scanning beam must remain largely undissipated through each interval of vibration and agitating the image forming particles, a means of charging or ionizing the image forming particles which is separate from the scanning beam is desirable. Where the electric image charges are deposited on one surface, say the lower side of a horizontal vibratory plate and the opaque image forming particles are distributed on another parallel surface, say the upper side of this same plate, some method of uniformly charging the layer of opaque particles during agitation is required.

The present invention is concerned with improved methods of ionizing the image forming particles and accomplishing the formation of a semi-opaque image corresponding to the electric image.

In accordance with one modification of my invention, ionization of the image forming particles is accomplished by applying by means of an electrode necessary positive or negative electrical potential to the image surface which is sufficiently conducting so that either a deficiency or an excess of negative charges exists throughout the surface and on the image particles. Since the image surface and the image forming particles thereon are charged alike, both positive, or both negative, a repulsive electrostatic force exists, and when the surface vibrates and the particles rebound from the surface, they will remain in a charged or ionized state and will be susceptible to electrostatic repulsion or attraction by the image surface points of higher potential resulting from the charges of the electric image deposited by the scanning beam. This will be described in detail in connection with the drawings.

In accordance with another modification of my invention, the image forming particles may be charged through electrostatic induction wherein electric charges existing on a separate plane surface parallel to the image forming surface induce a preponderance of positive or negative charges on the image forming surface and on the image forming opaque particles in contact with the surface. This electric charge or ionization is retained by the image forming particles as they rebound from the surface. If an electric potential is used to produce the charges on the separate plane surface, one side of that potential may be connected directly to an electrode associated with the image forming surface. No appreciable flow of current would occur, however, since the charges on the particles are returned again to the image forming surface on the next rebound.

To accomplish uniform ionization of the image forming particles without the use of excessive electrical potential applied to the image surface, I may make use of light sensitive material in the image forming particles. This material may be either of the photoelectric or surface emission type or of the photovoltaic or potential generating type.

The electric image which is deposited by the scanning beam in the device may be on the vibrating image forming surface itself or on another parallel surface in close proximity thereto. This will be apparent from the alternative arrangements shown in the drawings.

Referring to the drawings, Fig. 1 shows a preferred arrangement of a television receiving system with cathode ray image projecting device in which the electric image surface and the semi-opaque image forming surface are one and the same.

Fig. 2 shows a plan view of a section of the image forming surface used in the device of Fig. 1.

Fig. 3 is a graph of the probable distribution for a short time interval, of the electric potential along a straight line path on a portion of the image forming surface of Fig. 1, and represents the point to point summation of the potentials due to both the uniform surface charge and the electric image charges deposited by the scanning beam.

Fig. 4 shows a modified construction using one surface for the electric image which is deposited by the scanning beam and another surface on which is formed the semi-opaque image.

Fig. 5 shows another arrangement of electric image and semi-opaque image forming surfaces in which the light is reflected by the image

forming surface instead of being transmitted through it.

Fig. 6 shows another modification with the electric image deposited on one side of a vibratory plate with the image forming particles on the opposite side.

Fig. 7 shows a preferred construction of a small projection tube which can be vibrated as a whole to agitate the opaque particles on the image forming surface in the tube.

Fig. 8 shows a modified arrangement with a vibratory plate in the tube actuated through a flexible joint in the tube wall by an external winding and magnetic core.

Fig. 9 is a sectional view along line A—A in Fig. 8.

Fig. 10 shows a preferred arrangement in which the image forming particles are charged through electrostatic inductive action employing a plane surface electrode parallel to the image surface.

In Fig. 1 the scanning signals are received on some form of receiving element 1 which may be a wire circuit or a radio antenna. After passing through the receiving amplifier 2, the image signals which will determine the light and shadow effects in the light image to be produced are then connected to the cathode ray image reproducing tube 3 through the conductors 4 which are connected to the cathode 5 and the control grid 6. The output of the receiving amplifier 2 is also connected to the input of the scanning deflection signal amplifier 7. Amplifier 7 separates the high and low frequency scanning deflection signals which are transmitted separately to the amplifiers 8 and 9 having suitable characteristics for the respective deflection signals.

With the high frequency deflection signals from the output of amplifier 8 connected to the electrodes 10 and the low frequency deflection signals from amplifier 9 connected to the coils 11, the required deflecting fields are set up which cause the cathode beam 12 to scan the surface of diaphragm 13 in synchronism with the scanning operation at the transmitting end of the circuit.

The low frequency scanning deflection signals from selective amplifier 7 are also connected to amplifier 14 whose output is connected to the synchronous motor device 15 used to drive the light interrupting disk 16 and commutator and slip ring arrangements 17 and 18. In this manner the interrupting disk 16 and commutators 17 and 18 are rotated in synchronism with the low frequency scanning deflection signal. The shaded and unshaded segments of the commutators 17 and 18 are permanently connected to the respective shaded and unshaded slip rings.

Diaphragm 13 may be formed of resilient glass material and is fused at the edge to the flange of the glass tube 3. The flange of diaphragm 13 is provided with holes which receive the bolts 39 holding together cemented joints between the diaphragm 13 and iron core 21 and between the iron core 21 and the glass cover 33. The spaces above and below the diaphragm 13 are evacuated and the diaphragm 13 is entirely free to vibrate due to its flexible design. The top surface of diaphragm 13 has a ring shaped electrode 29 with a connection brought out through the flange of the tube 3. The ring 29 and its connection is of silver plated onto the diaphragm surface. The diaphragm 13 has a thin layer 32 of small particles of opaque ceramic insulating material on its top surface inside of the ring 29. The vibration of diaphragm 13 is controlled by the coil 19 which is mounted on porcelain insulating sleeves 34 on the stiff wire supports 35. The upper ends of the wires 35 are sealed into the diaphragm 13. Coil 19 carries an alternating current from source 20 during the scanning operation.

The iron core 21, shown in section, extends completey around the periphery of the tube 3 and is magnetized by the direct current winding 22 also shown in section. The iron magnetic shields 36 and 37 also extend completely around the periphery of the tube and serve to shield the center portion of the diaphragm 13 from stray magnetic flux. The shield 36 is provided with slots through which pass the coil supports 35.

The cathode ray tube 3 is also provided with the usual accelerating electrode 23 and auxiliary electrode 24 for focusing the cathode beam. The accelerating potential for the electronic beam is supplied to anode 23 through the filter 38 and commutator and slip ring arrangement 17 mounted on the same shaft with the disk 16. The brushes and contact surfaces at 17 are so arranged that the accelerating potential to anode 23 is interrupted at the same time that light is allowed to pass through the interrupting disk 16. The collecting ring 29 is maintained at a negative potential by the source 26. Collecting ring 29 controls the leakage currents from the surface of diaphragm 13. The potential of anode 24 is constant and is about 4 times the potential applied to anode 23.

The commutator and slip ring arrangement 18 controls the vibration of the diaphragm 13, and its brushes and contact surfaces are so arranged that an alternating current from source 20 is supplied to the winding 19 during the scanning of diaphragm 13 by the beam 12, but between scanning operations and at the same instant that light is allowed to pass through the disk 16, the alternating current through the coil 19 is interrupted and the coil 19 is short circuited to dampen its motion. The light interrupting disk 16 is provided with holes distributed at proper intervals around the periphery. By means of the optical system shown briefly, light from the source 25 passing through the diaphragm 13 and the tube 3 and through an opening in the disk 16 is projected onto the screen 28 in the form of a light and shadow image.

Fig. 2 is a plan view of a section of the diaphragm 13 and shows how the electrical connections to the collecting ring 29 are brought out through the flange of tube 3.

The operation of the system shown in Fig. 1 is as follows: The cathode beam 12 scans the top surface of diaphragm 13 and at the same time the beam varies in intensity all in accordance with the scanning and image signals received through the receiving element 1. During the scanning operation the diaphragm 13 is vibrated by coil 19. The image forming surface on diaphragm 13 and the opaque ceramic particles 32 thereon are uniformly charged negatively due to the negative potential 26 impressed on electrode 29. When the opaque ceramic particles rebound from the surface of diaphragm 13 they retain the charges acquired while in contact with the surface of 13, since a multiplicity of charges of like polarity repel each other. The particles 32 while in a charged or ionized state are susceptible to electrostatic repulsive forces exerted by the concentrated electric image charges deposited on diaphragm 13 by the cathode beam 12. After each scanning operation or cycle of the low fre-

quency deflection signal, the commutator slip ring arrangement 17 removes the positive potential from electrode 23 interrupting the beam 12. At the same time, the commutator slip ring arrangement 18 interrupts the alternating current in coil 19, also short circuiting the coil and stopping the vibration of diaphragm 13. Disk 16 at the same time allows light from source 25 to be projected onto the screen 28. Due to the electrostatic repelling action between the electric image charges on the surface of 13 and the charged particles 32 during the vibration of diaphragm 13, the distribution of these particles conforms to the electric image which was deposited by scanning beam 12 which corresponds to the light and dark portions of the light image which was scanned at the transmitting end of the circuit. This resulting semi-opaque image is projected upon the screen 28 by the light originating at source 25.

Fig. 3 is a graphical representation of the point to point summation of the electric potential along a straight line path on a portion of the image forming surface in Fig. 1 immediately after scanning. The potential level 1 here represents the uniform surface charge accumulated from dissipation of the electrical image charges and also from the source 26. The higher potential levels 2, 3 and 4 are the result of undissipated electric image charges deposited by the scanning beam superimposed on the uniformly distributed charges of potential level 1. The uniformly distributed charges are for the purpose of ionizing the image forming particles as previously described.

Fig. 4 shows a partial sectional view of an image projection tube such as 3 in Fig. 1 with a modified construction consisting essentially of a flexible flat ring 30 with two transparent plates 13 and 31 mounted in the center. The plate 13 is very thin and is mounted close to the surface of plate 31. A scanning beam 12 deposites an electric image on the upper surface of 13. The lower plate 31 has a layer of opaque image forming particles 32 which may be charged by leakage currents to or from an electrode 29 around the edge of plate 31, or the particles 32 may be of light sensitive self ionizing type.

Fig. 5 shows still another modified construction in which the electric image surface 13 is stationary, while the semi-opaque image forming surface 31 is vibrated as in Fig. 1 and Fig. 4. As a further modification, plate 31 is of conducting material with a polished surface so that a light beam such as 41 after passing through the semi-opaque image formed by particles 32, will be reflected in an upward direction as shown. The opaque image forming particles 32 may be ionized by charging the surface of plate 31, or light sensitive self ionizing particles may be used.

Fig. 6 illustrates a modified construction for a projection tube having a single plate 13, the under side of which is exposed to a scanning beam 12. On the upper surface of plate 13 is a thin layer of image forming particles 32 which may be charged by leakage currents to or from electrode 29, or the particles may be of light sensitive self-ionizing material.

Fig. 7 shows a small image projecting tube in which the image forming surface is vibrated by vibrating the tube as a whole. The electric image surface 13 and image forming plate 31 are rigidly mounted in the tube. In other respects this tube functions the same as Figures 3 and 4. It may have a single plate functioning as an electric image surface and semi-opaque image forming surface as in Figures 1 and 6 and may employ an electrode such as 29 in Fig. 1 for charging the image particles 32, or may make use of light sensitive self ionizing particles.

The modified arrangement of Fig. 8 includes a metal tube shell 3 with glass window 4 and flexible joint 6. Image forming plate 13 is mounted in a metal ring 30 which extends through the flexible joint 6 and connects to actuating winding 19, similar to Fig. 1. Iron core 21 and magnetic shield 36 are similar to those in Fig. 1 and also serve to connect and reinforce the upper and lower sections of tube 3 through brackets 5.

In Fig. 10 the scanning beam 12 deposits an electric image on the lower surface of vibrating screen 13. Close to the upper surface of the screen 13 is a plane surface electrode 30 which may be very thin and offer little resistance to light transmission, or it may consist of a reflecting surface which reflects the light transmitted through the image forming screen 13. A suitable electric potential 28 is connected between the ring electrode 29 on the screen 13 and the plane surface electrode 30. Potential 28 may be either a positive or a negative potential. The potential 28 produces a preponderance of negative or positive charges on the upper surface of screen 13 and on the opaque image forming particles 32, similar to the charging of the parallel plates of a condenser. The image forming particles 32 retain the electric charges acquired on the surface of screen 13 as they rebound from the surface of 13 so that they are susceptible to electrostatic action of the electric image charges on the lower surface of screen 13 resulting in their redistribution to form the desired semi-opaque on the surface of screen 13.

As an alternative arrangement to that shown in Fig. 10, I may have the top surface of screen 13 exposed to the scanning beam and use a plane surface electrode located below the screen, or use the bottom surface of screen 13 as an electrode to charge inductively the top surface of the screen 13 and the particles thereon.

In Fig. 1 I have shown a negative potential applied to the electrode 29 which would impart a uniform negative charge to the image forming particles rebounding from the surface of diaphragm 13 resulting in these particles being repelled from the electric image charges deposited on 13 by the scanning beam 12. I may, if desired, use a positive potential on the electrode 29 which would charge the image forming particles positively, resulting in their being attracted by the image charges deposited by the scanning beam 12.

In the device shown, by way of example, in Fig. 1 I may employ image forming particles such as 32 of photoelectric material. This eliminates the requirement for any excessive external potential at 26 applied to the image forming surface with possible non-uniform effect throughout the surface. The particles of photoelectric material would be exposed to light from the source 25 or any auxiliary source of light of convenient wave length to sensitize the material used, and may be of the surface emission type, as for example cuprous oxide, or of the photovoltaic or potential generating type, or may exhibit both phenomena. The photoelectric particles would become charged positively due to the action of the light from source 25, and during their successive rebounds from the vibrating sur-

face of diaphragm 13 would migrate horizontally toward the negative charges constituting the electric image deposited by the scanning beam 12.

It is further contemplated that the conductivity of one surface of the vibrating screen or diaphragm such as 13 in Fig. 1 may be controlled by the use of thin transparent sputtered metallic films. Such a metallic film might be auxiliary to a photoelectric material of the photovoltaic type, as for example, cuprous oxide particles on a thin sputtered film of metallic copper.

Opaque image forming particles of photoelectric material may be used with any of the various constructions shown in Figures 1 to 10. With the exception of Fig. 10, no definite external circuit exists in which a photoelectric current might flow. Such an external circuit does exist, however, in Fig. 10 between the electrodes 29 and 30, but would not effect the scheme of operation which is dependent only on an electron emission by a photoelectric particle, leaving the particle electrostatically unbalanced.

Considerable variation is possible in the conductivity of the material used for the opaque image forming particles, depending upon the arrangement of the electric image surface and the semi-opaque image forming surface, and the density of the layer of image forming particles. Where the electric image surface and the semi-opaque image forming surface are one and the same, as in Fig. 1, namely, the top surface of diaphragm 13, the image particles preferably should be of high electrical resistance. During vibration of the diaphragm 13 in Fig. 1 and scanning of the top surface of diaphragm 13 by the beam 12, enough random paths are formed by particles in contact with the surface at one time so that too rapid dissipation of the electric image charges might occur if the particles were numerous enough and were of conducting material. When the electric image surface and the semi-opaque image forming surface are separated as in Fig. 6 for example, where the electric image charges are deposited on the lower surface of diaphragm 13 and the image forming particles 32 are on the upper surface, image forming particles of conducting material such as carbon might be used. The exact material used would depend upon a number of factors, namely: conductivity of the vibrating screen surface, density of the image forming particles, desired flow of stray currents on the screen surface, and the method of charging the image forming particles, whether from an electrode around the edge of the screen surface, or whether this charging is also dependent upon an electronic scanning beam or dispersed electronic beam covering the entire image forming surface.

This invention has been illustrated only in a general preferred form throughout and it should be understood that it is capable of many and varied modifications without departing from its purpose and scope, and I therefore believe myself to be entitled to make and use any and all of these modifications such as suggest themselves to those skilled in the art to which the invention is directed, provided that such modifications fall fairly within the purpose and scope of the hereinafter appended claims.

What is claimed is:

1. Receiving tube comprising an electron gun emitting an electronic beam, a screen of transparent material of low electrical conductivity arranged so as to be exposed to the electrons emitted by the electron gun, said screen having a layer of fine opaque particles on its upper surface, means associated with the said electron gun for concentrating the beam emitted by said electron gun and for causing it to scan the said screen to deposit electric image charges thereon, means associated with the said receiving tube for causing said screen to vibrate in a vertical direction at definite time intervals thereby agitating the opaque particles causing said particles to rebound from the surface of the screen, an electrode associated with the said screen for uniformly charging the upper surface of the screen and the opaque particles in contact with the said upper surface, whereby the said opaque particles in rebounding from the upper surface of said screen carry away charges from the said upper surface and being ionized are electrostatically influenced by the said electric image charges and are redistributed on the upper surface of the said screen so as to form on said screen when it ceases to vibrate a semi-opaque image conforming to the pattern of the said electric image charges.

2. Receiving tube comprising an electron gun emitting an electronic beam, a screen of transparent material of low electrical conductivity arranged so as to be exposed to the electrons emitted by the electron gun, said screen having a layer of fine opaque particles on its upper surface, means associated with the said electron gun for concentrating the beam emitted by said electron gun and for causing it to scan the said screen to deposit electric image charges thereon, means associated with said receiving tube for causing said screen to vibrate in a vertical direction at definite time intervals thereby agitating the opaque particles causing said particles to rebound from the surface of the screen, an electrode associated with the said screen for uniformly charging negatively the upper surface of the screen and the opaque particles in contact with the said upper surface, whereby the said opaque particles in rebounding from the upper surface of said screen carry away negative charges from the said upper surface and being ionized are electrostatically repelled by the said electric image charges and are redistributed on the upper surface of the said screen so as to form on the said screen when it ceases to vibrate a semi-opaque image conforming to the pattern of the said electric image charges.

3. Receiving tube comprising an electric gun emitting an electronic beam, a screen of transparent material of low electrical conductivity arranged so as to be exposed to the electrons emitted by the electron gun, said screen having a layer of fine opaque particles on its upper surface, means associated with the said electron gun for concentrating the beam emitted by said electron gun and for causing it to scan the said screen to deposit electric image charges thereon, means associated with said receiving tube for causing said screen to vibrate in a vertical direction at definite time intervals thereby agitating the opaque particles causing said particles to rebound from the surface of the screen, an electrode associated with the said screen for uniformly charging positively the upper surface of the screen and the opaque particles in contact with the said upper surface, whereby the said opaque particles in rebounding from the upper surface of said screen carry away positive charges from the said upper surface and being ionized are electrostatically attracted by the said electric image charges and are redistributed on the upper sur-

face of the said screen so as to form on said screen when it ceases to vibrate a semi-opaque image conforming to the pattern of the said electric image charges.

4. Receiving tube comprising an electron gun emitting an electronic beam, a screen of transparent material of low electrical conductivity arranged so as to be exposed to the electrons emitted by the electron gun, said screen having a layer of fine opaque particles of light sensitive material on its upper surface, means associated with the said electron gun for concentrating the beam emitted by said electron gun and for causing it to scan the said screen to deposit electric image charges thereon, means associated with said receiving tube for causing said screen to vibrate in a vertical direction at definite time intervals thereby agitating the said opaque light sensitive particles causing said particles to rebound from the surface of the screen, means associated with the said receiving tube for uniformly lighting and energizing the opaque light sensitive particles whereby the said opaque light sensitive particles in rebounding from the upper surface of said screen are ionized and are electrostatically attracted by the said electric image charges and are redistributed on the upper surface of the said screen so as to form on the said screen when it ceases to vibrate a semi-opaque image conforming to the pattern of the said electric image charges.

5. Receiving tube comprising an electron gun emitting an electronic beam, a screen of transparent material of low electrical conductivity arranged so that the lower surface of said screen is exposed to the electrons emitted by the electron gun, said screen having a layer of fine opaque particles on its upper surface, means associated with the said electron gun for concentrating the beam emitted by said electron gun and for causing it to scan the lower surface of said screen to deposit electric image charges thereon, means associated with said receiving tube for causing said screen to vibrate in a vertical direction at definite time intervals thereby agitating the said opaque particles causing said particles to rebound from the surface of the screen, an electrode associated with the said screen for uniformly charging the upper surface of the screen and the opaque particles in contact with the said upper surface, whereby the said opaque particles in rebounding from the upper surface of said screen carry away charges from the said upper surface and being ionized are electrostatically influenced by the said electric image charges on the lower surface of the said screen and are redistributed on the upper surface of the said screen so as to form on the said screen when it ceases to vibrate a semi-opaque image conforming to the pattern of the said electric image charges.

6. Receiving tube comprising an electron gun emitting an electronic beam, a screen of transparent material of low electrical conductivity arranged so that the lower surface of said screen is exposed to the electrons emitted by the electron gun, said screen having a layer of fine opaque particles of light sensitive material on its upper surface, means associated with the said electron gun for concentrating the beam emitted by said electron gun and for causing it to scan the lower surface of said screen to deposit electric image charges thereon, means associated with said receiving tube for causing said screen to vibrate in a vertical direction at definite time intervals thereby agitating the said opaque light sensitive particles causing said particles to rebound from the surface of the screen, means associated with the said receiving tube for uniformly lighting and energizing the opaque light sensitive particles, whereby the said opaque light sensitive particles in rebounding from the upper surface of said screen are ionized and are electrostatically attracted by the said electric image charges on the lower surface of the said screen and are redistributed on the upper surface of the said screen so as to form on the said screen when it ceases to vibrate a semi-opaque image conforming to the pattern of the said electric image charges.

7. Receiving tube comprising an electron gun emitting an electronic beam, a first screen of transparent material of low electrical conductivity arranged so as to be exposed to the electrons emitted by the electron gun, a second screen parallel to and in close proximity to the lower surface of said first screen but not exposed to the electronic beam, the said second screen having on its upper surface a layer of fine opaque particles, means associated with the said electron gun for concentrating the electronic beam emitted by said electron gun and for causing it to scan the upper surface of said first screen to deposit electric image charges thereon, means associated with said receiving tube for vibrating said second screen in a vertical direction at definite time intervals thereby agitating said opaque particles causing them to rebound upward toward the lower surface of said first screen, means associated with the said receiving tube for ionizing the opaque particles on the upper surface of said second screen, whereby the said ionized opaque particles in rebounding from the upper surface of said second screen are electrostatically influenced by the said electric image charges deposited on the said first screen so as to form on the second screen when it ceases to vibrate a semi-opaque image conforming to the pattern of the said electric image charges on said first screen.

8. Receiving tube comprising an electron gun emitting an electronic beam, a first screen of transparent material of low electrical conductivity arranged so as to be exposed to the electrons emitted by the electron gun, a second screen parallel to and in close proximity to the lower surface of said first screen but not exposed to the electronic beam, the said second screen having on its upper surface a layer of fine opaque particles, means associated with the said electron gun for concentrating the electronic beam emitted by said electron gun and for causing it to scan the upper surface of said first screen to deposit electric image charges thereon, means associated with the said receiving tube for vibrating said first and second screens in a vertical direction at definite time intervals thereby agitating said opaque particles causing them to rebound upward toward the lower surface of said first screen, means associated with the said receiving tube for ionizing the opaque particles on the upper surface of said second screen whereby the said ionized opaque particles in rebounding from the upper surface of the second screen are electrostatically influenced by the said electric image charges deposited on the said first screen, so as to form on the second screen when it ceases to vibrate a semi-opaque image conforming to the pattern of the said electric image charges on said first screen.

9. Receiving tube comprising an electron gun emitting an electronic beam, a first screen of

transparent material of low electrical conductivity arranged so as to be exposed to the electrons emitted by the electron gun, a second screen of conducting material with a smooth reflecting surface parallel to and in close proximity to the lower surface of said first screen but not exposed to the electronic beam, the said second screen having on its upper surface a layer of fine opaque particles, means associated with the said electron gun for concentrating the electronic beam emitted by said electron gun and for causing it to scan the upper surface of said first screen to deposit electric image charges thereon, means associated with the said receiving tube for vibrating said second screen in a vertical direction at definite time intervals thereby agitating said opaque particles causing them to rebound upward toward the lower surface of said first screen, means associated with the said receiving tube for ionizing the opaque particles on the upper surface of said second screen, whereby the said ionized opaque particles in rebounding from the upper surface of the second screen are electrostatically influenced by the said electric image charges deposited on the said first screen so as to form on the reflecting surface of said second screen when it ceases to vibrate a semi-opaque image conforming to the pattern of the said electric image charges on said first screen.

10. Receiving tube comprising an electron gun emitting an electronic beam, a screen of transparent material of low electrical conductivity arranged so as to be exposed to the electrons emitted by the electron gun, said screen having a layer of fine opaque particles on its upper surface, means associated with the said electron gun for concentrating the beam emitted by said electron gun and for causing it to scan the said screen to deposit electric image charges thereon, means associated with the said receiving tube for causing it to vibrate in a vertical direction at definite time intervals thereby agitating the opaque particles causing the said particles to rebound from the surface of the said screen, an electrode associated with the said screen for uniformly charging the upper surface of the screen and the opaque particles in contact with the said upper surface, whereby the said opaque particles in rebounding from the upper surface of said screen carry away charges from the said upper surface and being ionized are electrostatically influenced by the said electric image charges and are redistributed on the upper surface of the said screen so as to form on the said screen when the receiving tube ceases to vibrate a semi-opaque image conforming to the pattern of the said electric image charges.

11. Receiving tube comprising an electron gun emitting an electronic beam, a screen of transparent material of low electrical conductivity arranged so as to be exposed to the electrons emitted by the electron gun, said screen having a layer of fine opaque particles of light sensitive material on its upper surface, means associated with the said electron gun for concentrating the beam emitted by said electron gun and for causing it to scan the said screen to deposit electric image charges thereon, means associated with the said receiving tube for causing it to vibrate in a vertical direction at definite time intervals thereby agitating the opaque light sensitive particles causing the said particles to rebound from the surface of the said screen, means associated with the said receiving tube for uniformly lighting and energizing the opaque light sensitive particles, whereby the said opaque light sensitive particles in rebounding from the upper surface of said screen are ionized and are electrostatically attracted by the said electric image charges and are redistributed on the upper surface of the said screen so as to form on the said screen when the receiving tube ceases to vibrate a semi-opaque image conforming to the pattern of the said electric image charges.

12. Receiving tube comprising an electron gun emitting an electronic beam, a first screen of transparent material of low electrical conductivity arranged so as to be exposed to the electrons emitted by the electron gun, a second screen parallel to and in close proximity to the lower surface of said first screen but not exposed to the electronic beam, the said second screen having on its upper surface a layer of fine opaque particles, means associated with the said electron gun for concentrating the electronic beam emitted by said electron gun and for causing it to scan the upper surface of said first screen to deposit electric image charges thereon, means associated with said receiving tube for vibrating said tube in a vertical direction at definite time intervals thereby agitating the opaque particles on said second screen causing them to rebound upward toward the lower surface of said first screen, means associated with the said receiving tube for ionizing the opaque particles on the upper surface of said second screen, whereby the said ionized opaque particles in rebounding from the upper surface of said second screen are electrostatically influenced by the said electric image charges deposited on the said first screen so as to form on the second screen when the receiving tube ceases to vibrate a semi-opaque image conforming to the pattern of the said electric image charges on said first screen.

13. Receiving tube comprising an electron gun emitting an electronic beam, a screen of transparent material of low electrical conductivity arranged so as to be exposed to the electrons emitted by the electron gun, said screen having a layer of fine particles of cuprous oxide on its upper surface, means associated with the said electron gun for concentrating the beam emitted by said electron gun and for causing it to scan the said screen to deposit electric image charges thereon, means associated with the said receiving tube for causing said screen to vibrate in a vertical direction at definite time intervals thereby agitating the cuprous oxide particles causing said particles to rebound from the surface of the screen, means associated with the said receiving tube for uniformly lighting and energizing the cuprous oxide particles whereby the said cuprous oxide particles in rebounding from the upper surface of said screen are ionized and are electrostatically attracted by the said electric image charges and are redistributed on the upper surface of the said screen so as to form on the said screen when it ceases to vibrate a semi-opaque image conforming to the pattern of the said electric image charges.

14. In an electronic receiving tube of the character described, a vibratory image forming screen having a layer of fine opaque particles, said image forming screen being actuated by means of a mechanical link extending through a flexible gas tight joint in the receiving tube wall, means external to the said receiving tube and connected to said mechanical link for vibrating said

image forming screen in a vertical direction at definite time intervals.

15. Receiving tube comprising an electron gun emitting an electronic beam, a screen of transparent material of low electrical conductivity arranged so that the lower surface of said screen is exposed to the electrons emitted by the electron gun, said screen having a layer of fine opaque particles on its upper surface, means associated with the said electron gun for concentrating the beam emitted by said electron gun and for causing it to scan the lower surface of said screen to deposit electric image charges thereon, means associated with the said receiving tube for causing said screen to vibrate in a vertical direction at definite time intervals thereby agitating the opaque particles causing said particles to rebound from the surface of the screen, an electrode parallel to the upper surface of said screen for charging by electrostatic induction the upper surface of the screen and the opaque particles in contact with the said upper surface, whereby the said opaque particles in rebounding from the upper surface of said screen carry away induced charges from the said upper surface and being ionized are electrostatically influenced by the said electric image charges on the lower surface of the said screen and are redistributed on the upper surface of the said screen so as to form on the said screen when it ceases to vibrate a semi-opaque image conforming to the pattern of the said electric image charges.

16. Receiving tube comprising an electron gun emitting an electronic beam, a screen of transparent material of low electrical conductivity arranged so that the upper surface of said screen is exposed to the electrons emitted by the electron gun, said screen having a layer of fine opaque particles on its upper surface, means associated with the said electron gun for concentrating the beam emitted by said electron gun and for causing it to scan the upper surface of said screen to deposit electric image charges thereon, means associated with said receiving tube for causing said screen to vibrate in a vertical direction at definite time intervals thereby agitating the opaque particles causing said particles to rebound from the upper surface of said screen, means for uniformly charging the lower surface of said screen producing a uniform induced charge on the upper surface of said screen, whereby the said opaque particles in rebounding from the upper surface of said screen carry away induced charges from the said upper surface and being ionized are electrostatically influenced by the said electric image charges on the upper surface of the said screen and are redistributed on the upper surface of the said screen so as to form on the said screen when it ceases to vibrate a semi-opaque image conforming to the pattern of the said electric image charges.

17. Receiving tube comprising an electron gun emitting an electronic beam, a screen of transparent material of low electrical conductivity arranged so that the lower surface of said screen is exposed to the electrons emitted by the electron gun, said screen having a layer of fine opaque particles of light sensitive material on its upper surface, means associated with the said electron gun for concentrating the beam emitted by said electron gun and for causing it to scan the lower surface of said screen to deposit electric image charges thereon, means associated with the said receiving tube for causing said screen to vibrate in a vertical direction at definite time intervals thereby agitating the opaque light sensitive particles causing said particles to rebound from the surface of the screen, means associated with the said receiving tube for uniformly lighting and energizing the opaque light sensitive particles, an electrode parallel to the upper surface of said screen for collecting photoelectrons emitted by said light sensitive particles, whereby the said light sensitive particles in rebounding from the upper surface of said screen in an electrically charged state are electrostatically attracted by the said electric image charges on the lower surface of the said screen so as to form on the said screen when it ceases to vibrate a semi-opaque image conforming to the pattern of the said electric image charges.

18. Receiving tube comprising an electron gun emitting an electronic beam, a first screen of transparent material of low electrical conductivity arranged so as to be exposed to the electrons emitted by the electron gun, a second screen of conducting material parallel to and in close proximity to the lower surface of the said first screen but not exposed to the electronic beam, the said second screen having on its upper surface a layer of fine opaque particles of light sensitive material, means associated with said electron gun for concentrating the electronic beam emitted by said electron gun and for causing it to scan the upper surface of said first screen to deposit electric image charges thereon, means associated with the said receiving tube for vibrating said second screen in a vertical direction at definite time intervals thereby agitating said opaque light sensitive particles causing said particles to rebound upward toward the lower surface of said first screen, means for uniformly lighting and energizing said opaque light sensitive particles so that said particles in rebounding from the upper surface of said second screen are electrostatically attracted by the said electric image charges deposited on the said first screen so as to form on the said second screen when it ceases to vibrate a semi-opaque image conforming to the pattern of the said electric image charges on the said first screen.

LESTER H. SMITH.