May 12, 1953 A. K. MARSH ET AL 2,638,038

MACHINE FOR MARKING TAGS OF DIFFERENT STYLES

Filed Oct. 3, 1946 5 Sheets-Sheet 1

Fig. 1.

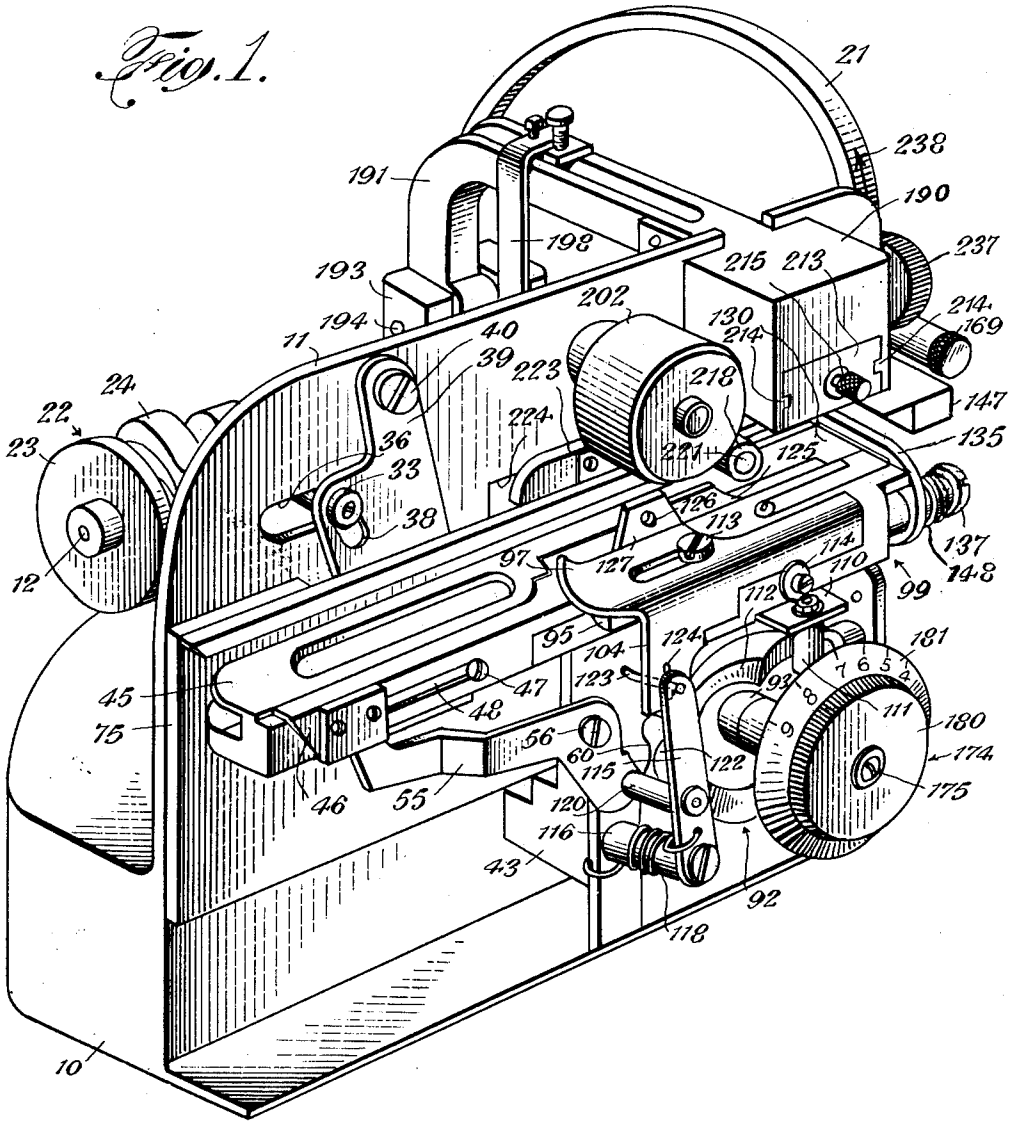

INVENTORS

Alonzo K. Marsh

Joseph Weinmont

BY Emery, Varney, Whittemore & Dix

ATTORNEYS

May 12, 1953 A. K. MARSH ET AL 2,638,038

MACHINE FOR MARKING TAGS OF DIFFERENT STYLES

Filed Oct. 3, 1946 5 Sheets-Sheet 2

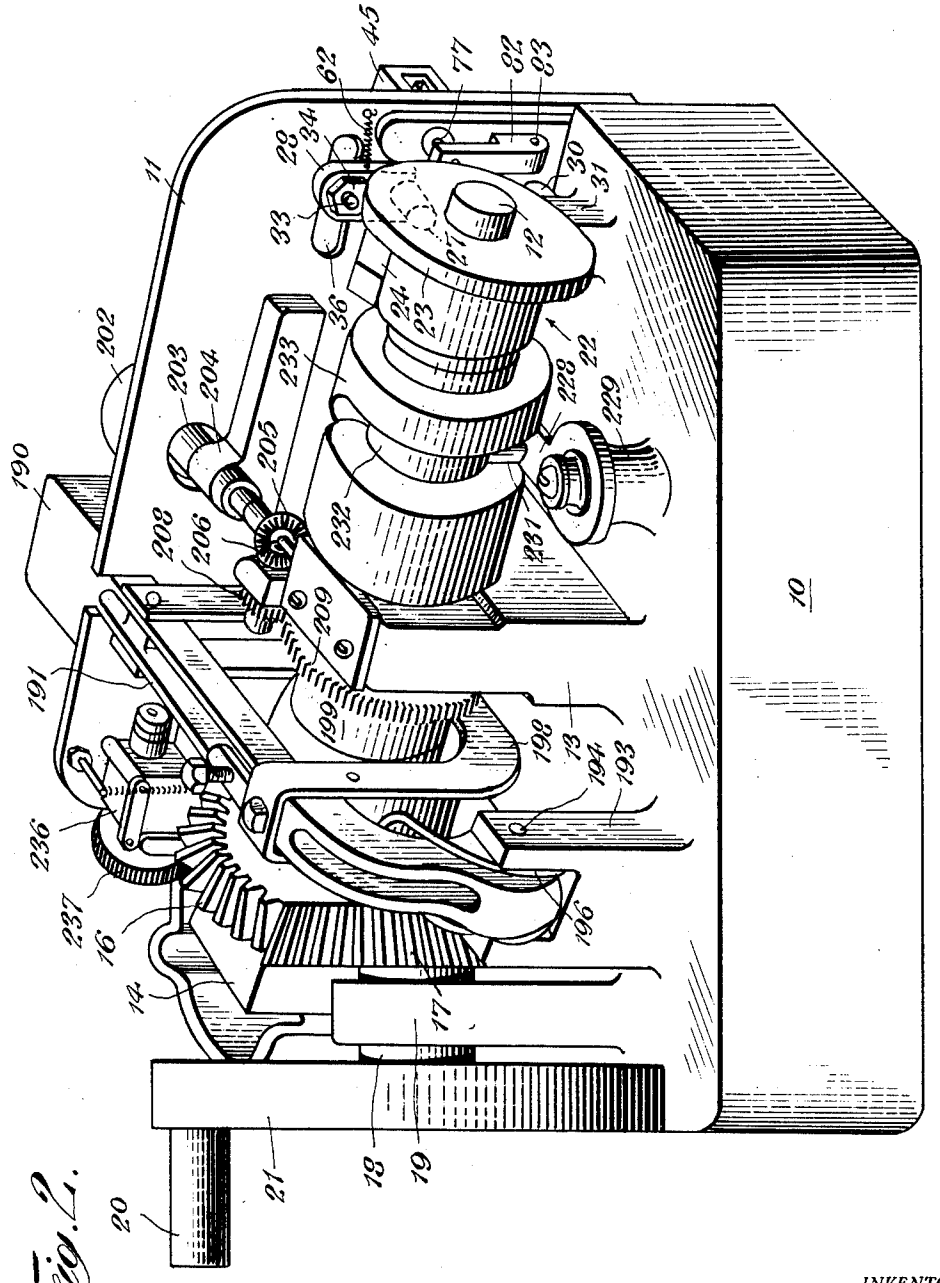

Fig. 2.

INVENTORS
George K. Marsh
Joseph Weimont

BY Evans, Varney, Whittemore & Dix
ATTORNEYS

May 12, 1953 A. K. MARSH ET AL 2,638,038

MACHINE FOR MARKING TAGS OF DIFFERENT STYLES

Filed Oct. 3, 1946 5 Sheets-Sheet 3

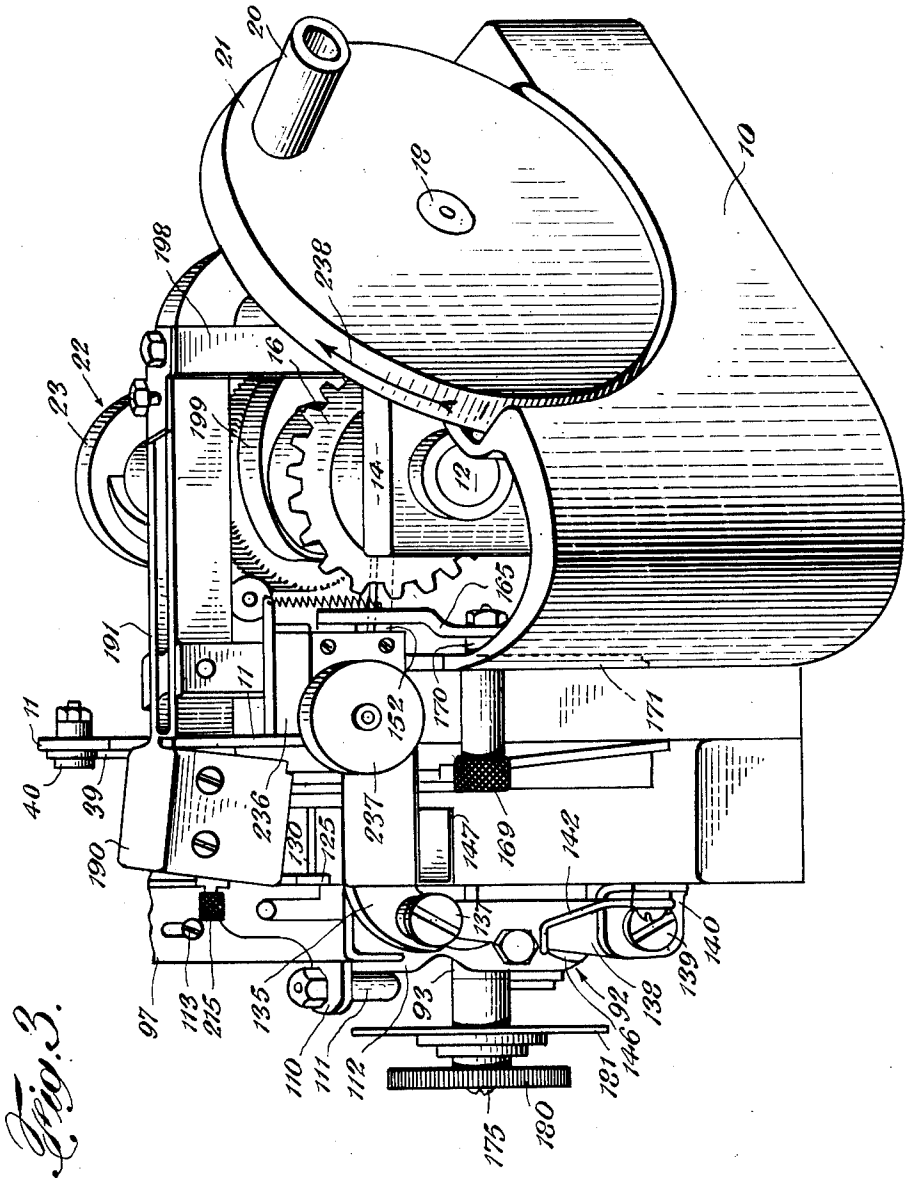

Fig. 3.

INVENTORS

Alonzo K. Marsh.
Joseph Weimont.

BY Emery, Varney, Whittemore & Dix
ATTORNEYS

May 12, 1953 A. K. MARSH ET AL 2,638,038

MACHINE FOR MARKING TAGS OF DIFFERENT STYLES

Filed Oct. 3, 1946 5 Sheets-Sheet 4

Fig. 4.

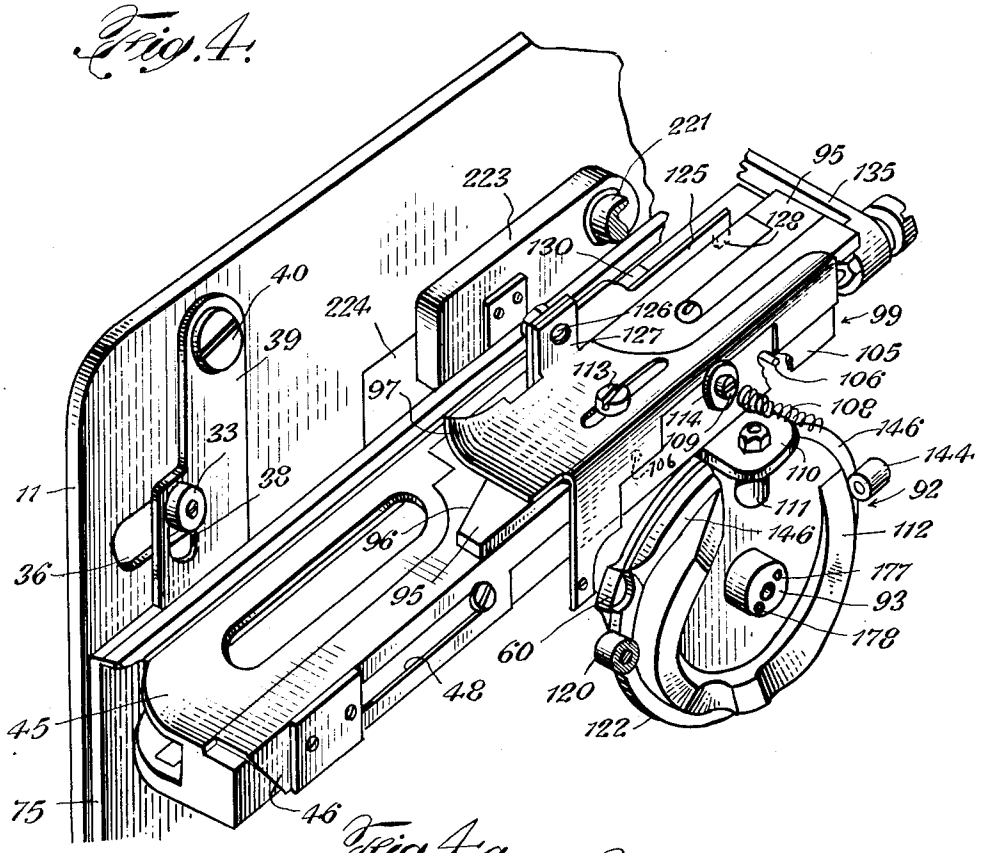

Fig. 4a.

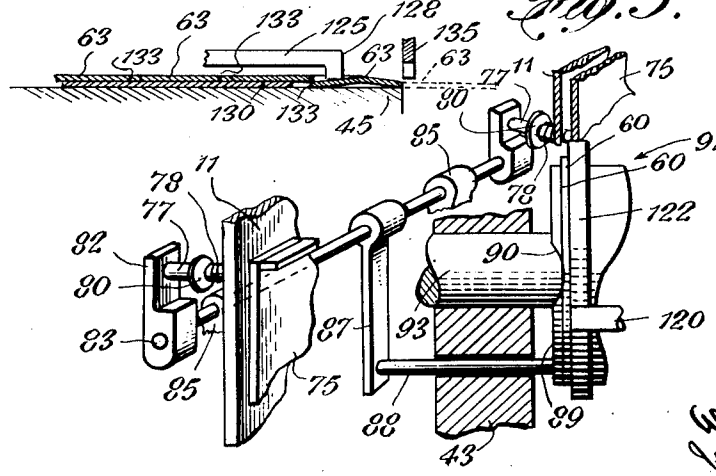

Fig. 5.

INVENTORS

Alonzo K. Marsh
Joseph Weimont

BY Emery, Varney, Whittemore & Dix.
ATTORNEYS

May 12, 1953 A. K. MARSH ET AL 2,638,038

MACHINE FOR MARKING TAGS OF DIFFERENT STYLES

Filed Oct. 3, 1946 5 Sheets-Sheet 5

Fig. 6.

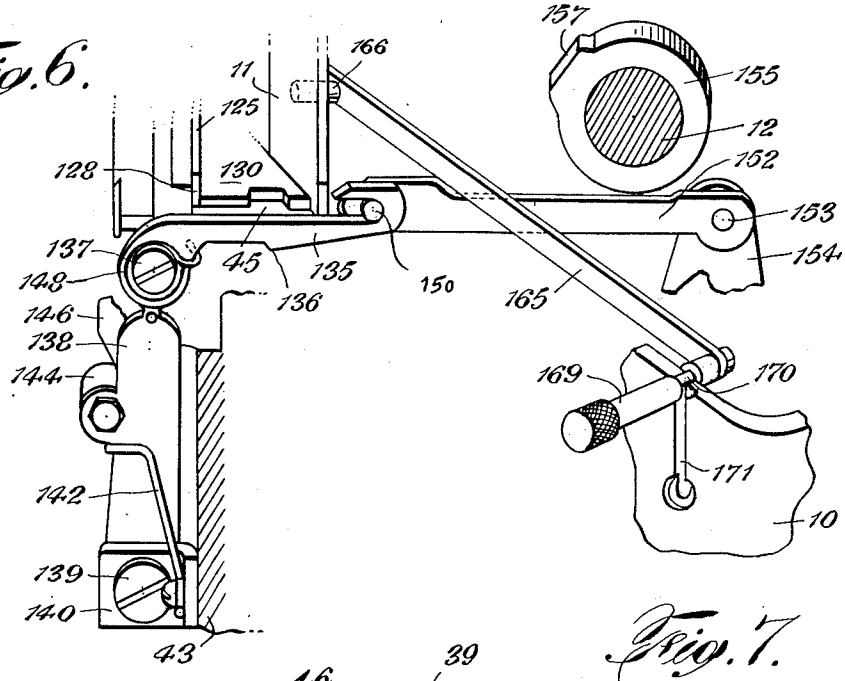

Fig. 7.

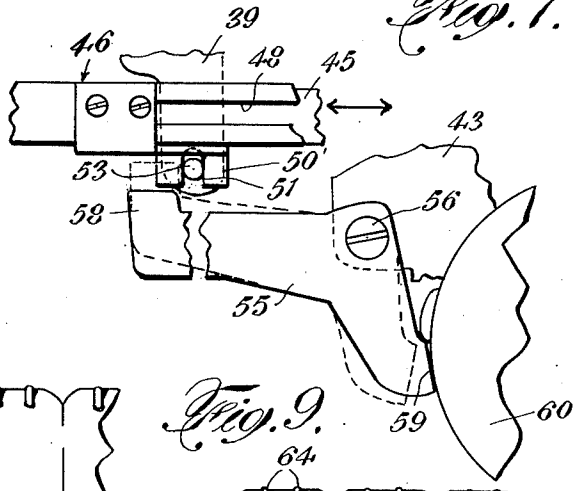

Fig. 8.

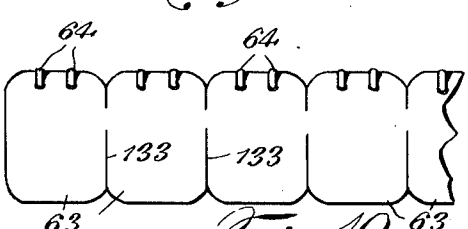

Fig. 9.

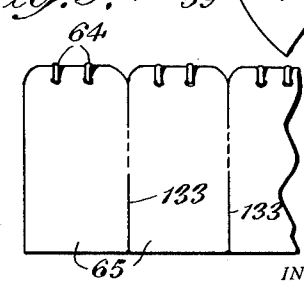

Fig. 10.

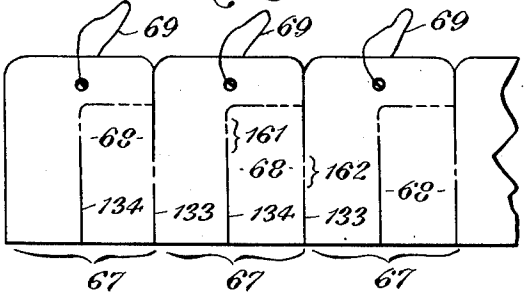

INVENTORS

Alonzo K. Marsh.
Joseph Weimont.

BY Emery, Varney, Whittemore & Dix
ATTORNEYS

Patented May 12, 1953

2,638,038

UNITED STATES PATENT OFFICE

2,638,038

MACHINE FOR MARKING TAGS OF DIFFERENT STYLES

Alonzo K. Marsh, Ridgewood, and Joseph Weimont, Bogota, N. J., assignors to A. Kimball Company, New York, N. Y., a corporation of New York

Application October 3, 1946, Serial No. 700,922

21 Claims. (Cl. 93—87)

1

This invention relates to machines for printing price tags and pin tickets such as are used in stores for marking merchandise.

Different styles of tags are attached to different articles, and the differences in styles are not only in the attaching means, whether pin, string, or other means, but also in the sizes of the tags or tickets which differ in length or width or both, and in the location on the tag of the area which is to be printed.

It is an object of this invention to provide an improved machine for printing price tags of a variety of different styles. The term "tag" is used in this specification and in the claims in a broad sense to designate pin tickets as well as string tickets and other tags that are used for marking merchandise.

The invention comprises a single machine to which strips of tags are supplied, and the apparatus can be set to feed and print tags of various combinations of length, width, and marked area. In accordance with one feature of the invention all of the necessary adjustments of the strip guides and feed mechanism are obtained by moving a single dial into positions indicated by indexing indicia located around the dial and corresponding to style designations of the different tags to be printed.

Other objects, features, and advantages of the invention will appear or be pointed out as the description proceeds.

In the drawing, forming a part hereof in which like reference characters indicate corresponding parts in all the views:

Fig. 1 is a perspective view of the front of a tag printing machine embodying this invention,

Fig. 2 is a perspective view of the machine shown in Fig. 1, but viewing the machine from the back,

Fig. 3 is an end view of the machine shown in the other figures,

Fig. 4 is a fragmentary perspective view of a portion of the feed control mechanism, the tag guide structure, and some of the apparatus for adjusting the machine.

Fig. 4a is a sectional view of a part of the feed control mechanism.

Fig. 5 is a fragmentary detail view of other apparatus for adjusting the guide for one side of the tag strips,

Fig. 6 is a fragmentary view, partly in section, showing the control for the knife by which the tags are severed from the strip,

Fig. 7 is a fragmentary detail view showing mechanism for changing the stroke of the feed control mechanism,

2

Figs. 8, 9 and 10 show strips of tags of different styles that can be marked by the machine.

Manually-operated drive

The machine includes a base 10 to which is attached a vertically extending panel or frame 11. Behind the frame 11 there is a main cam shaft 12 supported by pedestal bearings 13 and 14 (Fig. 2) which extend upwardly from the frame. There is a bevel gear 16 secured to the cam shaft 12 and this bevel gear meshes with another bevel gear 17 on the end of a drive shaft 18. The drive shaft 18 turns in a pedestal bearing 19 attached at its lower end to the frame 10, and the drive shaft is rotated by a handle 20 extending from a flywheel 21 which is secured to the outer end of the drive shaft.

Drive for feed-control mechanism

At the right hand end of the cam shaft 12 there is a cam 22 for controlling the operation of the tag feeding mechanism of the machine. This cam 22 has an outer element 23 that extends around the entire periphery of the cam and an inner element 24 which extends around a portion of the cam periphery. The space between the inner and outer cam elements 23 and 24 provides a groove for receiving a cam follower 27. This cam follower 27 is attached to an arm 28 that rocks back and forth about a pivot which connects the lower end 30 of the arm 28 to a boss 31 on the base 10.

A stud 33 has a threaded rearward end which screws into the upper portion of the arm 28. This stud 33 is secured in position by a lock nut 34. The forward end of the stud 33 extends through a slot 36 in the frame 11, and into slot 38 (Fig. 1) in a rocker plate 39 which oscillates about a screw 40 attached to the frame 11. Rotation of the cam 22 causes the stud 33 to move back and forth in the slot 36, and to rock the plate 39 about its fulcrum screw 40.

On the front of the frame 10 there is a bracket 43 which supports a table 45 extending substantially the entire length of the machine. A carriage 46 slides along the forward edge portion of the table 45 and is held in contact with the table 45 by a guide screw 47 which passes through a slot 48 in the side of the carriage 46. This guide screw 47 threads into the side of the table 45.

A portion of the carriage 46 extends under the table 45 and has a downwardly extending projection 50 (Fig. 7) with a slot 51. A stud 53 extends forward from the lower end of the rocker plate 39 and passes through the slot 51 so that oscillation of the rocker plate 39 moves the stud

53 back and forth and causes the carriage 46 to slide along the table 45.

The reciprocating movement of the carriage 46 operates feeding mechanism for advancing a strip of tags through the machine. The tags are connected together side by side so that the width of a strip corresponds to the height or length of a tag. The machine includes mechanism for limiting the length of the stroke of the carriage 46 when printing narrow tags. A part of the feed control comprises a bell crank 55 which rocks about a fulcrum screw 56 threaded into a portion of the bracket 43. This bell crank 55 has a hook 58 at one end and a cam follower 59 at the other end.

The cam follow 59 is periodically displaced by a cam 60, into the dotted line position shown in Fig. 7; and when the bell crank 55 is in this dotted line position, the hook 58 is in the path of the stud 53 and limits the stroke of the carriage 46. The cam which operates the carriage 46 causes the carriage to move toward the right in Fig. 7, and movement of the carriage 46 in the other direction is caused by a spring 62 (Fig. 2). The slot between the cam elements 23 and 24 is constructed so that there is clearance for the cam follower 27 to remain out of contact with the cam element 23 when the stroke of the feed mechanism is limited to a length less than the full throw of the cam 22.

Guides for tag strips

The mechanism for printing the tags, which will hereinafter be explained, always prints within the confines of a fixed area over a platen located in the table 45 near the discharge end of the table, that is, the right hand end of the table 45 as viewed in Fig. 4. For this reason it is not sufficient to have one fixed guide and one movable guide for holding tag strips of different width against displacement transversely of the table. For example, with some tags the area to be printed will extend closer to the top of the tag than in the case of other styles.

Fig. 8 shows a strip of tags 63 having areas on which the printing can extend close to the top edges of the tags adjacent the attaching pins 64. Fig. 9 shows tags 65 of a different style having longer length but also equipped with pins 64 that leave a large area of the tag available for marking. Fig. 10 shows a still different style of tag 67 which has a main body portion and an auxiliary portion 68, and incised lines along which this auxiliary portion 68 can be torn away from the main body of the tag.

With marking tags of the style shown in Fig. 10, duplicate indicia are printed side by side on the tag, with one set of indicia located on the main body portion of the tag and the other set of indicia located entirely on the auxiliary portion 68. When merchandise are sold, the sales clerk tears off the auxiliary portion 68 of the tag and these torn-off portions are used for inventory control. The tags 67 are shown with strings 69 for attaching them to merchandise for which they are to be used, but even if these tags 67 were equipped with pins 64 such as shown in Figs. 8 and 9, it would still not be possible to have the marking area extend as close to the upper ends of the tags 67 as can be done with the tags 63 and 65. All of the printing on the tags 67 must be located below the top incised line of the auxiliary portion 68.

The guides between which the upper and lower edges of the tags move through the machine, must, therefore, be adjustable so that either the upper edge guide, or the lower edge guide, or both can be adjusted with respect to the platen in order to adapt the machine for use with strips of different width and with tags having their marking areas at different distances from the upper edge of the tag.

There are guides extending along both sides of the table 45 (Fig. 1) for holding a strip of tags against displacement transversely of the table. The upper ends of the tags move along a guide plate 75. This guide plate 75 is spaced from the table 45 to leave space for the attaching pins or strings along the upper ends of the tags, and there is a forwardly-extending lip along the upper edge of the plate 75 for holding the tags down on the table 45. With most styles of tags the guide plate 75 is positioned immediately in front of the panel 11, with the back of the guide plate 75 up against the front wall of the panel. This guide plate is supported by studs 77 (Fig. 5) which extend rearwardly from the guide plate 75. The studs 77 extend through openings in the panel 11 and serve as bearings on which the guide plate is movable toward and from the table on which the strip of tags is supported. The guide plate 75 is urged rearwardly toward the panel 11 by springs 78 compressed between the back face of the panel 11 and flanges 80 on the studs 77.

When the machine is to be used for certain styles of tags, the guide plate 75 is pushed forward away from the panel 11 by arms 82 located behind the studs 77 and secured to a rocker shaft 83. This rocker shaft turns in bearings 85 supported from the frame of the machine, and the shaft 83 is rocked by a lever arm 87 extending downward from the shaft 83 into the path of a push rod 88 that slides through an opening in the bracket 43.

The forward end of the push rod 88 contacts with the face of a cam 89. When the end of the push rod 88 is at a high part of the cam, the lever 87 and arms 82 are in position to cause the guide plate 75 to be held away from the panel 11. Whenever the end of the push rod 88, which serves as a cam follower, is over a low part of the cam 89, such as the depression 90, the push rod 88, the lever 87 and studs 77 are moved by the springs 78 into position to bring the guide plate 75 rearwardly toward the panel 11, and into contact with the panel 11 when the depression at 90 is of substantial depth for tags having maximum spacing between the marked area and the top of the tag.

The cam 89 is on the back face of a composite cam assembly 92 which includes the cam 60, described in the explanation of Fig. 7, and other cams which will be described. This entire composite cam assembly 92 is attached to and supported by a shaft 93 which is rotatable in a bearing in the bracket 43.

The guide for the lower edge of the tag strip is of composite construction with an edge plate 95 (Fig. 4) that has a part 96 of its inner face disposed at an angle to the direction of movement of the strips for facilitating the location of tag strips which do not have pins. Those strips that do have pins are brought into line on the table 45 when the row of pins is initially inserted into the space between the table 45 and the guide plate 75. The lower guide element includes also a cover plate 97 a portion of which extends beyond the guide face of the edge plate 95, and this

cover plate 97 is bent upward to provide a flaring entrance into the lower edge guide.

The lower edge guide structure, comprising the plates 95 and 97, and other connected parts, is indicated generally by the reference character 99, and this lower guide assembly 99 rests upon the table 45 and is held against displacement lengthwise of the table by two studs.

The edge plate 95 has a downwardly extending portion 105 in front of the table 45, and this downwardly extending portion 105 has studs 106 which extend into openings in the front of the table 45 for holding the guide assembly 99 against movement lengthwise of the table 45. The studs 106 are slidable in the openings into which they extend, and the guide assembly 99 is therefore movable transversely of the table for adjusting the guide assembly for tags of different styles.

The guide assembly 99 is urged inwardly, to accommodate it to narrow tag strips, by a spring 108 that bears against the front of the guide assembly 99. The spring 108 is compressed between the guide assembly 99 and the cover that fits over the cam assembly 92. This cover is removed in the drawing in order to expose the cam assembly, and it is sufficient to understand that the forward end of the spring 108 contacts with a fixed abutment of the machine. The inner end of the spring 108 fits over the head of a screw 109 which prevents transverse displacement of the spring.

Cam mechanism is provided for moving the guide assembly 99 forward, against the pressure of the spring 108, to accommodate the guide to tag strips of greater width. This cam mechanism includes a bracket 110 secured to the front of the guide assembly 99, and a cam follower 111 extending down from the bracket 110 and into the path of a cam 112 located on the front of the cam assembly 92.

The cover plate 97 is a part of the guide assembly 99 but is connected to the edge plate 95 in such a way as to be movable with respect to the edge plate. This connection includes a screw 113 extending through a slot in the cover plate 97 and threaded into the edge plate 95. The head of the screw 113 is wider than the slot and the screw comes down against a shoulder which leaves sufficient clearance under the head for the cover plate 97 to slide freely with respect to the edge plate 95. The cover plate 97 is also guided by a washer 114 which extends over a downwardly extending edge of the cover plate 97, and which is spaced from the portion 105 of the edge plate 96 so as to leave the cover plate 97 free to slide back and forth with respect to the edge plate 95. The washer 114, however, prevents the cover plate 97 from moving transversely with respect to the edge plate 95 or from turning about the retaining screw 113.

Strip feeding mechanism

The cover plate 97 is moved into different positions lengthwise of the edge plate 95 by rocking an arm 115 (Fig. 1) about a fulcrum stud 116 extending outward from the bracket 43. A spring 118 is wound around the fulcrum stud 116 and anchored at one end to a portion of the bracket 43. The spring 118 has its forward end anchored to the arm 115 and the torsion of the spring 118 is in a direction to urge the arm 115 to move clockwise in Fig. 1. A cam follower stud 120 extends inward from the arm 115 and into the path of a peripheral cam 122 that forms a part of the composite cam assembly 92. At the upper end of the arm 115 there is a stud 123 that extends through a slot 124 in the lowermost part of the cover plate 97.

A presser element comprising a finger 125 (Fig. 4) is pivotally supported at one end by a screw 126 which extends through a lug 127 projecting upward from the cover plate 97. At the free end of the finger 125 there is a downwardly extending tip 128 for engaging the tags and for pushing the bottom portion of an end tag downward with respect to the next succeeding tag of the strip so that a pawl 130 of the feed mechanism can engage the depressed portion of the tag under the tip 128 and push the strip forward. The pawl 130 reciprocates back and forth as a unit with the carriage 46, and in effect comprises a portion of the carriage 46.

Referring again to Figs. 8 to 10, each of the strips of tags with which the invention is intended to be used has a cut 133 extending from the bottom edge of the strip for a substantial distance toward the upper end of the strip. Some of the tags have intermediate cuts 134 of different length from the cut 133. The reason for the different lengths of these cuts will be explained in connection with the cutting apart of the tags.

Fig. 4*a* shows the finger 125, after it has been pushed down by the printing head, which will be described hereinafter. The pressure of the tip 128 on the last tag 63 immediately to the right of the cut 133, bends the lower end of that tag downward below the plane of the end surface of the next tag so that the pawl 130, on which the other tags are resting, comes against the edge of the depressed tag and feeds the entire strip forward to bring the last tag into the dotted line position shown, with the attached side of the tag exactly even with the end of the table 45, and the next tag in position to be printed.

The pawl 130 moves to the end of the table 45 on each of the feed strokes. The delivery end of the table 45 serves as a shearing edge and there is a knife 135 which comes down along this shearing edge at the end of the table 45 for severing the last tag from the strip when the feed stroke has been completed. It will be apparent that by using the edges of the tags as the abutments against which the feed pawl 130 comes in contact to feed the strip, the strips are fed forward for a distance exactly equal to the distance between succeeding cuts 133 (Figs. 8 to 10), or cuts 133 and 134, provided the stroke of the feed pawl 130 is not equal to or greater than twice the distance between successive cuts.

Feed pawl strokes equal to twice the distance between successive cuts 133 are avoided, when using narrow tags or tags on which two areas are to be printed, as in Fig. 10, by moving the hook 58 (Fig. 7) into the path of the stud 53 so that the carriage 46 is confined to a shorter stroke. The actual distance that the strip is fed on each stroke, however, is determined by the spacing of the cuts 133 and 134 of the tags and not by the actual stroke of the feed pawl 130 because the feed pawl, on its return stroke has some overtravel, that is, it moves back further than necessary to engage the edge of the next tag.

The reason for having the cover plate 97 adjustable lengthwise along the lower edge guide structure 99 is for locating the finger 125 so that the tip 128 is in the proper position for depressing the bottom portion of the tag last printed when using tags of any selected width.

Cut-off mechanism and adjustment

The knife 135 for cutting successive tags from a strip is best shown in Fig. 6. This knife has a relatively short shearing edge 136 which is lower than the remainder of the knife. All of the tag strips with which this invention is used have their tags connected by webs extending along only a portion of the length of each tag and the shearing section 136 is long enough to sever the tag-connecting webs. The knife 135 is supported by a fulcrum screw 137 at the upper end of a lever 138 which is itself supported by a fulcrum screw 139 extending through an angle 140 attached to the front of the bracket 43. The lever 138 is urged in a clockwise direction in Fig. 6 by a spring 142.

There is a cam follower roller 144 extending from one side of the lever 138, and this cam follower roller 144 contacts with an outer cam face 146 (Fig. 4) of the composite cam assembly 92. The cam 146 is on the front face of the composite cam assembly and further out from the shaft 93 than is the cam face 112; and the cam follower roller 144 does not extend in far enough to be affected by the cam 112.

The purpose of the cam 146 is to shift the cam follower 144 and move the fulcrum 137 (Fig. 6) to change the location of the shearing section 136 of the knife transversely of the tag strip supporting table in accordance with the location of the webs connecting the tags of different styles.

The machine is made so that it can be used to mark strips of tags without cutting the tags apart. The knife 135 can be depressed to a position that brings the top of the knife even with the top of the table 45. The knife is in this position in Fig. 6, and the strip of tags feeds across the top of the knife and through a sheet metal guide 147 (Fig. 3) attached to the front of the frame or panel 11.

The knife 135 is urged into a raised position by a spring 148 (Fig. 6), and the knife is depressed, to make its cutting stroke, by a pin 150 extending through a slotted end of the knife behind the panel 11. This pin 150 extends out from one side of a lever arm 152 which is supported by a fulcrum pin 153 from a bracket 154 extending upward from the frame of the machine. The lever arm 152 is pushed downward by a cam 155 secured to the main cam shaft 12. There is one high portion 157 on the cam 155 and this portion 157 causes the lever arm 152 to operate once for each cycle of the marking machine.

The angular position of the cam 155 on the cam shaft 12 is so related to the angular positions of the other cams that the knife 135 is operated at the end of a feed stroke of the machine just after the tag strip has been advanced to extend the last tag beyond the end of the table 45.

For tags such as the tags 67 of Fig. 10, the machine must operate through two complete cycles in printing each of these tags because duplicate information is printed on the main body and on the auxiliary tag portion 68. The knife will operate once for each cycle of the machine and will, therefore, come down on the center of each tag 67. The auxiliary tag portions 68 are not severed from the tags 67, however, because the incised webs 161 connecting the auxiliary portion 68 and the main body of each of the tags 67 at the ends of cuts 134 are too far from the bottom edge of the tag strip to be under the shearing section of the knife. The knife merely flexes the material of the strip downward on the right-hand side of the cut 134. The incised webs 162 that connect the successive tags 67 are located closer to the bottom edge of the strip and under the shearing portion of the knife when the knife is adjusted for tags of the style shown in Fig. 10.

The knife 135 is moved downward into the inoperative position shown in Fig. 6 by means of a lever 165 extending across the top of the lever arm 152. This lever 165 is supported at one end by a fulcrum pin 166 extending from the back of the panel 11. The other end of arm 165 carries a handle 169 that slides along a stud 170 rigidly connected to the lever 165. The stud 170 extends through a slot 171 (Fig. 3) in the front of the frame 10, and the handle 169, located out in front of the frame 10, can be moved downward along the slot 171 to depress one end of lever 165 and push the lever arm 152 downward into the position shown in Fig. 6. When in such a position, the lever arm 152 is not affected by the cam 155 since the lever arm is depressed below the maximum throw of the cam. The handle 169 is wider than the slot 171, but there is a counterbore at the upper and lower ends of the slot 171, and the end of the handle 169 is pushed into these counterbores for holding the lever 165 in either its raised or lowered position.

Indexing for different styles of tags

The various cams on the cam assembly 92 (Figs. 4 and 5) are so shaped that with the shaft 93 in various positions the cams adjust the guides, the feed mechanism, and the cut-off knife for every style of tag with which the machine is intended to be used. In order to determine the angular position of the shaft 93 there is an indexing head 174 (Fig. 1) attached to the end of the shaft 93 by a screw 175 threaded into the end of the shaft 93. The indexing head 174 has pins which fit into openings 177 and 178 (Fig. 4) in the shaft 93, and these pins 177 are of different diameter or located less than 180° apart, or may be otherwise arranged, so that the indexing head can be put on the shaft 93 in only one angular position.

The indexing head 174 includes a knob 180 (Fig. 1) by which the head is turned, and has a dial 181 with indicia, such as numerals, located at angularly spaced regions around the face of the dial. The indexing numbers on the dial correspond to the style numbers of tags shown on a sample display board or on a legend sheet for guiding the user of the machine. In the apparatus as shown in the drawing, the dial 181 is turned to bring to the top position the style number of the tags to be printed. The cam assembly structure shown in the drawing is ordinarily covered with a housing, and the indexing head is located on the outside of the housing. The indexing numbers on the dial 181 can be located, with respect to the shaft 93, so that the desired style index can be brought into register with a fixed pointer located at any convenient position on the front of the housing.

Apparatus for marking tags

The machine has a printing head 190 secured to the forward end of a lever 191 which is connected to a support 193 by a shaft 194. The lever 191 and printing head 190 are held in a raised position by a spring 196 (Fig. 2) anchored on the support 193. A cam follower in the form of a U-shaped strap 198 is attached at its upper ends to the lever 191 and extends under a cam

199 in position to be depressed by the cam as the high portion of the cam rotates into its lowermost position. This cam 199 is secured to the main cam shaft 12.

The printing head 190 is located out in front of panel 11. An ink supply roller 202 is also located out in front of the panel 11 and is supported by a shaft 203 extending through an opening in the panel 11 and through a bearing 204 attached to the back of the panel.

A bevel gear 205 meshes with another bevel gear 206 driven by a spur gear 208. This spur gear 208 is rotated by a large driving gear 209 secured to the main shaft 12 of the machine. Thus the ink supply roller 202 is rotated continuously during the operation of the machine and at a speed substantially faster than the speed of rotation of the main drive shaft 12.

The portion of the table 45 (Fig. 1) immediately under the printing head 190 serves as a platen and preferably contains a rubber insert. The printing head 190 holds a chase 213 in guides 214 and the chase is moved in and out by a handle 215 when the type is to be changed. When the printing head is in its raised position, the type which extends from the underside of the chase 213 is in position to be contacted by an inking roller 218 which reciprocates back and forth in a direction parallel to the table 45. This inking roller 218 is supported on a stud 221 extending outward from a carriage 223 which slides in a bearing slot 224 on the front panel 11.

The mechanism for moving the carriage 223 backward and forward along the slot 224 is not illustrated; and it is sufficient for purposes of this invention to understand that this carriage 223 is connected by a link mechanism to an operating lever 228 (Fig. 2), and that the rearward end of this operating lever is supported by a vertical pivot bearing 229 extending upward from the frame 10 and holding the operating lever 228 at such a level that a cam follower roller 231 carried by the lever 228 extends into a slot 232 of a cam 233 secured to the main cam shaft 12.

The cam slot 232 is shaped to cause the inking roller 218 (Fig. 1) to move from a rest position into contact with the ink supply roller 202 for long enough to acquire a fresh coating of ink around the entire circumference of the inking roller 218; and then across the face of the type in the chase 213, and back again into the rest position, during each cycle of operation of the machine. This movement of the inking roller is in such timed relation with the operation of the printing head 190 that the inking roller 218 is out from under the printing head before the printing head 190 starts its downward movement.

There is a counter 236 attached to the panel 11 alongside the lever 191. This counter is conventional and is operated by the lever 191 to record the number of times that the lever moves the printing head. This corresponds with the number of tags marked when using tags such as shown in Figs. 8 and 9, and is equal to twice the number of tags marked when using tags of the style shown in Fig. 10. The counter 236 is turned back to its zero setting by a knob 237.

Operation of the machine

When the machine is to be set for marking a particular style of tag, the flywheel 21 (Fig. 1) is first turned to an angular position that advances the carriage 46 on its feed stroke far enough to locate the stud 53 (Fig. 7) on the right-hand side of the hook 58 so that if the setting of the cam assembly raises the hook 58, the stud 53 will be on the right side of the hook to limit the movement of the carriage 45.

The proper direction for rotating the flywheel 21 is indicated by an arrow 238 marked on the rim of the flywheel, and the position to which the flywheel 21 (Fig. 1) must be turned to bring the parts into the correct positions for setting the index head is also determined by the arrow 238. For example with the arrow 238 in the position shown in Fig. 1, the operator knows that the other parts of the machine are in position so that they can be correctly adjusted by turning the indexing head 174.

The operator compares the strip of tags to be marked with samples or pictures of the different styles on a master sheet that indicates the proper setting of the index head for each style of tag. The index head is turned to bring the correct index number to the top of the dial. The strip of tags to be marked is then laid on the table 45 with the upper ends of the tags in contact with the upper edge guide plate 75, and the strip is moved manually along the table 45 until the end of the strip comes even with the shearing edge at the end of the table 45. If the tags are to be cut apart as successive tags are marked, the handle 169 (Fig. 6) is positioned at the top of the slot 171; but if the strips are to be marked without cutting the tags apart, the handle 169 is moved downward and to the end of the slot 171 and pushed into the counterbore at the bottom of the slot to hold the handle 169, lever 165, and the associated lever arm 152 and knife 135 in a lowered position that permits the strip of tags to pass over the top of the knife 165 and out through the guide 147 (Fig. 3).

The operator operates the machine by gripping the handle 20 and rotating the flywheel 21 which turns the associated gears and cams to cause the machine to perform one cycle of operation for each rotation of the flywheel. The cams cause the inking roller 218 (Fig. 1) to move first into contact with the ink supply roller 220 and travel across the face of the type that extends down from the chase 213. The carriage 223 then moves back and returns the inking roller 218 to its normal position, and the cam mechanism causes the printing head 190 to move down into contact with the endmost tag on the table 45. The tag is thus printed and this downward stroke of the printing head 190 is utilized to press the finger 125 into contact with the printed tag to depress one edge of the tag into position to be engaged by the feed pawl 130 (Fig. 4*a*).

Further operation of the cam mechanism causes the printing head to rise and the carriage 46 (Fig. 4) to move forward carrying the feed pawl 130 into contact with the endmost tag. At the end of the stroke of the feed carriage 46, the feed pawl 130 is always even with the shearing edge of the table 45, and the web connecting the endmost tag with the rest of the strip is thus positioned over the shearing edge of the table 45 and under the knife 135 in position to be cut, if the knife is in use.

Further operation of the cam mechanism depresses the knife 135 to sever the endmost strip, unless the knife has been locked in an inoperative position as previously explained. The feed carriage returns to its original position, or to the intermediate position if the indexing head has been set to bring the crank 55 (Fig. 7) up into the path of the pin 53. Such a restricted stroke is used only for narrow tags or double tags on which

duplicate indicia are to be marked on adjoining portions of the tag.

As the operator continues to rotate the flywheel, the cycle of operation is repeated over and over again until all of the tags of the strip have been printed. The machine can be used for printing single tags, but much of the automatic mechanism is unnecessary when using the machine for single tags.

The preferred embodiment of the invention illustrated and described includes features that make it adjustable for styles and sizes of tags having wide variations of dimensions and marking areas, and having duplicate marking areas, but the invention can be used in machines having combinations of some, but not all, of these features. Terms of orientation, are of course, relative, and various structural changes and modifications can be made in the apparatus illustrated without departing from the invention as defined in the claims.

What is claimed is:

1. In a machine for printing successive tags of a strip, said machine comprising a supporting table along which the strip moves, a platen portion on one end of the table, independently movable guides extending along opposite edges of the table for preventing transverse displacement of the strip, cut-off mechanism at the end of the supporting table for severing the endmost tag of the strip, apparatus for adjusting the cut-off mechanism to accommodate different styles of tags, automatic mechanism for feeding the strip forward for a predetermined distance during each cycle of operation of the machine, means for adjusting the position of the guide at one side of the table, other means for adjusting the position of the guide on the other side of the table, and common operating mechanism for moving the cut-off adjusting apparatus and both of the guide adjusting means, said operating mechanism including an indexing head that moves the cut-off adjusting apparatus and the guide adjusting means into different positions that cause different combinations of adjustment of the guides with respect to one another and with respect to the cut-off mechanism, said indexing head having designations thereon for different styles of tags, each of which designations is set in a different position to produce the combination of guide positions and cut-off mechanism adjustment for the particular style of tag designated.

2. In a tag marking machine the combination comprising a supporting table along which a strip of tags is fed, a platen portion located at one end of the table, and on which a tag is supported while being printed, a guide plate spaced from one edge of the table for guiding the upper edges of the tags in said strip, a lip on the guide plate extending over the top edges of the tags, supporting bearings on which the guide plate is movable toward and from the edge of said table, spring means urging the guide plate away from the edge of the table, a second guide extending along the other side of the supporting table and transversely across a portion of said table for guiding the lower edges of the tags of said strip, bearing means on which the second guide is movable transversely of the supporting table to accommodate it to tags of different width, spring means urging said second guide into position to cover a substantial portion of said table, a cam assembly including cylindrical cams on opposite faces of said assembly, separate cam followers operated by the respective cams and each connected with one of the guides for moving its guide against the force of said spring means, an indexing head connected with the cam assembly for turning the cam assembly into different positions to produce different combinations of adjustment of the guides, a dial on the indexing head, and designations of tag styles located at angularly spaced regions around the face of the dial to indicate the position to which the dial must be set to obtain the combination of guide adjustments required for the particular style of tag corresponding to the respective designations.

3. In a tag marking machine having a supporting table at a predetermined region of which a tag is marked, and having an indexing head that is movable into different positions for adjusting an element of the machine to accommodate tags of different size or style, the combination with said indexing head of a connection for adjusting a second element of the machine, automatic feed mechanism for advancing a tag to said predetermined region and for advancing the tag beyond said region after the marking operation, means that adjust the stroke of the feed mechanism to feed tags of different size, said means being operated from the indexing head through said connection.

4. In a tag marking machine for printing successive tags of tag strips, a support for a strip of tags, automatic feed mechanism for advancing the strip in successive steps, guides for both sides of the tag strip, separate apparatus for adjusting the guides for the different edges of the strip, apparatus for adjusting the feed mechanism for tags of different width, and a common indexing head operatively connected with the separate apparatus for adjusting the guides for the different edges of the strip and with the feed adjusting apparatus, the indexing head being movable into a plurality of positions that give different combinations of adjustment of said apparatus.

5. In a tag marking machine including a support for a strip of tags, guide means along one side of the support for guiding the upper edge of the strip, other guide means along the other side of the support for guiding the lower edge of the tag strip, bearing elements on which the respective guide means are movable toward and from one another to accommodate them to tag strips of different width, spring means urging the respective tag guides in one direction, cam means for moving each of the tag guides in the other direction against the force of said spring means, automatic feed mechanism for advancing the tag strip for a distance equal to the width of one tag during each cycle of operation of the machine, apparatus for adjusting the feed mechanism for tags of different width, and a common indexing head operatively connected with the cam means and with the apparatus for adjusting the feed mechanism, the indexing head being movable into different positions to give different combinations of adjustment.

6. In a tag marking apparatus the combination comprising a support for a strip of tags that has successive tags connected together across only a portion of the width of the strip, feed mechanism including a reciprocating pawl located on the strip support and under the tag strip, a device for bending at least a portion of one of the tags of the strip out of line with the successive tag to depress a side of the tag into position for contact with the feed pawl, guides for the upper and lower edges of the tag strip, apparatus for adjusting the guides for strips of differ-

ent widths, other apparatus for adjusting the stroke of the feed pawl to accommodate tags of reduced width, and indexing means for indicating the setting of all of the adjusting apparatus.

7. In a tag marking apparatus for use with tag strips having successive tags connected together by webs extending across only a portion of the width of the tag strip, a support along which the tag strip moves through the machine, guide means on both sides of the support for guiding the upper and lower edges of the tags, apparatus for adjusting the guide means to accommodate strips of different width, feed mechanism including a reciprocating feed pawl movable back and forth under a strip in the direction in which the strip is to be advanced, a presser element in position to bend a portion of a tag downward out of line with the next successive tag and into the path of the reciprocating feed pawl, apparatus for adjusting the position of said presser element toward and from the position at which the feed pawl stops at one end of its stroke, and other apparatus for changing the stroke of the feed pawl to accommodate tags of different width.

8. In a tag marking apparatus for use with tag strips having successive tags connected together by webs extending across only a portion of the width of the tag strip, a support along which the tag strip moves through the machine, guide means on both sides of the support for guiding the upper and lower edges of the tags, apparatus for adjusting the guide means to accommodate strips of different width, feed mechanism including a reciprocating feed pawl movable back and forth under a strip in the direction in which the strip is to be advanced, a presser element in position to bend a portion of a tag downward out of line with the next successive tag and into the path of the reciprocating feed pawl, apparatus for adjusting the position of said presser element toward and from the position at which the feed pawl stops at one end of its stroke. mechanism for advancing the pawl on its feed stroke, spring means for moving the feed pawl on its return stroke, and adjustable apparatus for determining the length of the return stroke of the feed pawl.

9. In a tag marking machine including a support with guides between which a strip of tags is fed to a marking station apparatus that adjusts the guides, transversely of the direction of movement of the strip, to accommodate tags of different style, cut-off mechanism located beyond the marking station and including a knife for severing the endmost tag from the strip, a fulcrum supporting one end of the knife, mechanism for rocking the knife about its fulcrum to bring the knife into position to sever the tag strip, and apparatus for adjusting the position of the fulcrum transversely of the direction of movement of the strip through the guides to accommodate the cut-off mechanism to strips and tags of different styles, and common control means that adjust both of said apparatus simultaneously to selected styles of tags.

10. In a tag marking machine for marking duplicate indicia on spaced-apart areas of successive tags that have one of the marking areas on an auxiliary tag portion connected to the main body of the tag by a web extending for only a portion of the height of the tag and that have successive tags connected together in strips by webs extending for only a portion of the width of the strip, the tag-connecting webs being located at a different distance from the edge of the strip than are the other webs that connect each of the auxiliary tag portions with the main body of its tag, the combination that comprises a marking station, a support along which the strip of tags is advanced through the machine, a cut-off mechanism at the discharge end of the support beyond the marking station, the cut-off mechanism comprising a knife having a shearing edge extending for only a portion of the width of the support, feed mechanism for advancing a tag strip along the support after each marking operation of the machine for a distance equal to the width of one of the marked areas of the tag, other mechanism for moving the knife to shear the end most tag from the strip, common operating means that operates the feed mechanism and the knife, and that operates the knife once for each operation of the feed mechanism, said knife extending across the width of the support further than the intended location of the webs that connect the successive tags together in the strip, but not extending as far as the intended location of the other webs that connect each of the auxiliary tag portions with the main body of its tag.

11. In a tag marking machine including a supporting table, a guide at one side of the table for the upper edge of a tag, a guide at the other side of the table for the lower edge of the tag, feed mechanism for advancing the tag along the table, apparatus for adjusting at least one of the edge guides to accommodate tags of different height, other apparatus for adjusting the feed mechanism to accommodate the machine to tags of different width, and motion transmitting connections that shift the apparatus for adjusting the feed mechanism into a different position upon movement of the edge guide adjusting apparatus into a predetermined position.

12. In a tag marking machine including a supporting table, a guide at one side of the table for the upper edge of a tag, a guide at the other side of the table for the lower edge of the tag, a feed mechanism for advancing the tag along the table, apparatus for adjusting the feed mechanism for tags of different width, other apparatus for adjusting at least one of the guides to accommodate tags of different height, and common indexing means operatively connected with the apparatus for adjusting the guide spacing and the apparatus for adjusting the feed mechanism, said indexing means being movable into a plurality of different positions to obtain different combinations of adjustment of said apparatus so that all of said apparatus can be set simultaneously for tags of predetermined style.

13. In a tag marking machine including a table along which a tag is advanced a predetermined location on the table at which the tag is marked, guide means along opposite sides of the table for guiding the upper and lower edges of the tag, feed mechanism for advancing the tag with a step movement into position to be marked and thereafter advancing the tag beyond the marking position, apparatus including a cam for adjusting the spacing of the guides to accommodate tags of different height, other apparatus including a cam for adjusting the feed mechanism to change the length of the steps by which the tag is moved, a common shaft to which both of the cams are connected, and an indexing head on the shaft that moves the shaft to different positions to obtain different combinations of adjustment of said apparatus.

14. In a tag marking machine including a support, guide means along opposite sides of the support for guiding the upper and lower edges of a tag, apparatus for adjusting the guide means to accommodate tags of different height, reciprocating feed mechanism for advancing tags along the support, apparatus for adjusting the feed mechanism including a stop movable into position to limit the stroke of the feed mechanism when using the machine with narrow tags, a common indexing head operatively connected with the apparatus for adjusting the guide means and the feed mechanism, the indexing head being movable into a plurality of positions to give different combinations of adjustment of said apparatus.

15. In a tag marking machine including a support having a predetermined area at which the tag is marked, guide means along opposite sides of the support for guiding the upper and lower edges of a tag, apparatus for adjusting the spacing of the guide means to accommodate tags of different height, feed mechanism for advancing the tag with a step-by-step movement, said feed mechanism including a reciprocating portion over which the tag travels, and a presser element for holding the tag down on the support and in position for cooperation with the reciprocating portion of the feed mechanism, and apparatus for adjusting the position of said presser element to accommodate the feed mechanism to different styles of tags.

16. In a tag marking machine, the combination comprising a support for a strip of tags, guide means for the upper and lower edges of the tags and between which the tag strip moves as it is advanced along said support, a marking station at a predetermined region of said support, feeding mechanism for advancing the tags, bearing surfaces on which the guide means are movable to shift the course of the tag strips transversely with respect to the marking station and to change the spacing of the guide means to accommodate tags of different height, apparatus for adjusting the guide means on said bearing surfaces, other apparatus for adjusting the feed mechanism for accommodating tags of different width, a knife at one end of the support beyond the marking station for severing the endmost tag from the strip, apparatus for adjusting the position of said knife to sever tags of different styles, a common indexing head movable into different positions, and operative connections between the indexing head and the respective apparatus for adjusting the guide means, the feed mechanism, and the position of the knife.

17. In a machine for marking successive tags connected together in a strip, the combination including a support for the tag strip, feed mechanism for advancing the strip intermittently in steps that are correlated with the width of the successive tags to be marked, apparatus for adjusting the feed mechanism to accommodate tags of different styles, a marking station to which successive tags are fed, cut-off mechanism beyond the marking station for severing the endmost tag from the strip, apparatus for adjusting the position of the cut-off mechanism to accommodate tags of different styles, a common indexing head operatively connected with the apparatus for adjusting the feed mechanism and also with the apparatus for adjusting the position of the cut off mechanism, the indexing head being movable into a plurality of positions that give different combinations of adjustment of said apparatus.

18. In a tag marking machine including a support for a strip of tags, a top guide along the support for guiding the upper edge of the strip, a lower guide on the other side of the support for guiding the bottom edge of the strip, feed mechanism including a reciprocating element, mechanism for operating said reciprocating element, a presser element for holding successive tags of the strip in position for cooperation with the reciprocating element of the feed mechanism, cut-off mechanism including a knife extending transversely of the strip, apparatus including a cam for moving the knife to accommodate it to tags of different styles, other apparatus including a cam for adjusting the position of the presser element lengthwise of the strip, other apparatus including a cam for limiting the stroke of the reciprocating element of the feed mechanism, other apparatus including a cam for adjusting the position of the bottom edge guide transversely of the support, other apparatus including a cam for adjusting the position of the top guide transversely of said support, and indexing means for indicating the setting of all of said cams.

19. A tag marking machine including a support and a device for marking successive tags located over a predetermined region of the support, guides along opposite sides of the support for guiding the upper and lower edges of a tag as it advances along said support, a cam and motion transmitting connections operated by the cam for moving the upper edge guide transversely of the support, a second cam and motion transmitting connections operated by the second cam for adjusting the lower edge guide transversely of the support, feed mechanism including a reciprocating pawl and a presser element that holds a tag in position for cooperation with said pawl, apparatus including a cam for adjusting the stroke of the pawl, other apparatus including a cam for adjusting the position of the presser element lengthwise of the support for cooperation with tags of different size, common operating mechanism for the marking device and the feed mechanism, and motion-transmitting connections that operate the marking device in timed relation with the feed mechanism and independently of the adjustments of the guides and of the feed mechanism.

20. A tag marking machine including a support and a device for marking successive tags located over a predetermined region of the support, guides along opposite sides of the support for guiding the upper and lower edges of a tag as it advances along said support, a cam and motion transmitting connections operated by the cam for moving the upper edge guide transversely of the support, a second cam and motion transmitting connections operated by the second cam for adjusting the lower edge guide transversely of the support, feed mechanism including a reciprocating pawl and a presser element that holds a tag in position for cooperation with said pawl, apparatus including a cam for adjusting the stroke of the pawl, a common shaft to which all of said cams are operatively connected, an indexing head connected with said common shaft, said indexing head being movable into a number of angularly spaced positions and the cams being of such angular extent that they operate over an angular range corresponding to the combined angular spacing of a number of positions of the indexing head, and said cams having their rises located at different angular

positions so that different positions of the indexing head obtain different combinations of adjustment of the upper and lower guides and the feed mechanism.

21. In a tag-marking machine, the combination including a support along which a strip of tags is fed past a marking device, guides along opposite sides of the course followed by the strip for preventing transverse displacement of the strip as it moves through the machine, separate adjusting means connected with each of the guides, parts movable into different positions to shift the guide adjusting means independently with respect to one another to obtain different combinations of positions transverse of the support, a feeding device that advances the strip with step by step movement along the support, a cut-off device at the end of the support, apparatus for adjusting at least one of the devices to accommodate strips having tags of different styles, a common indexing head movable into different positions corresponding to different tag style designations, and operative connections through which the common indexing head transmits motion to said apparatus and to the respective parts that shift the guide adjusting means.

ALONZO K. MARSH.
JOSEPH WEIMONT.

References Cited in the file of this patent

UNITED STATES PATENTS

Number	Name	Date
40,827	DeForest	Dec. 8, 1863
287,249	Crane	Oct. 23, 1883
950,754	Oehring	Mar. 1, 1910
958,033	Stewart	May 17, 1910
1,054,976	McCauley	Mar. 4, 1913
1,300,726	Henry	Apr. 15, 1919
1,484,136	Kohnle	Feb. 19, 1924
1,650,076	Laencher	Nov. 22, 1927
1,700,099	Shively	Jan. 22, 1929
1,745,504	Rabinowitz	Feb. 4, 1930
1,826,498	Bignell	Oct. 6, 1931
1,837,450	Laencher	Dec. 22, 1931
1,897,201	Laencher	Feb. 14, 1933
1,908,014	Evans	May 9, 1933
1,986,678	Laencher	Jan. 1, 1935
1,991,698	Powers	Feb. 19, 1935
2,023,045	Flood	Dec. 3, 1935
2,103,654	Weimont	Dec. 28, 1937
2,104,647	Henry	Jan. 4, 1938
2,125,626	Flood	Aug. 2, 1938
2,146,848	Purdy	Feb. 14, 1939
2,233,895	Mestre	Mar. 4, 1941
2,250,530	Hafecost	July 29, 1941
2,365,605	Sutter	Dec. 19, 1944
2,484,347	Iverson	Oct. 11, 1949

FOREIGN PATENTS

Number	Country	Date
441,226	France	Aug. 1, 1912