41/9

Nov. 11, 1941. A. H. GAEBEL 2,261,988

ETCHING APPARATUS

Filed April 8, 1937

Fig. 1,

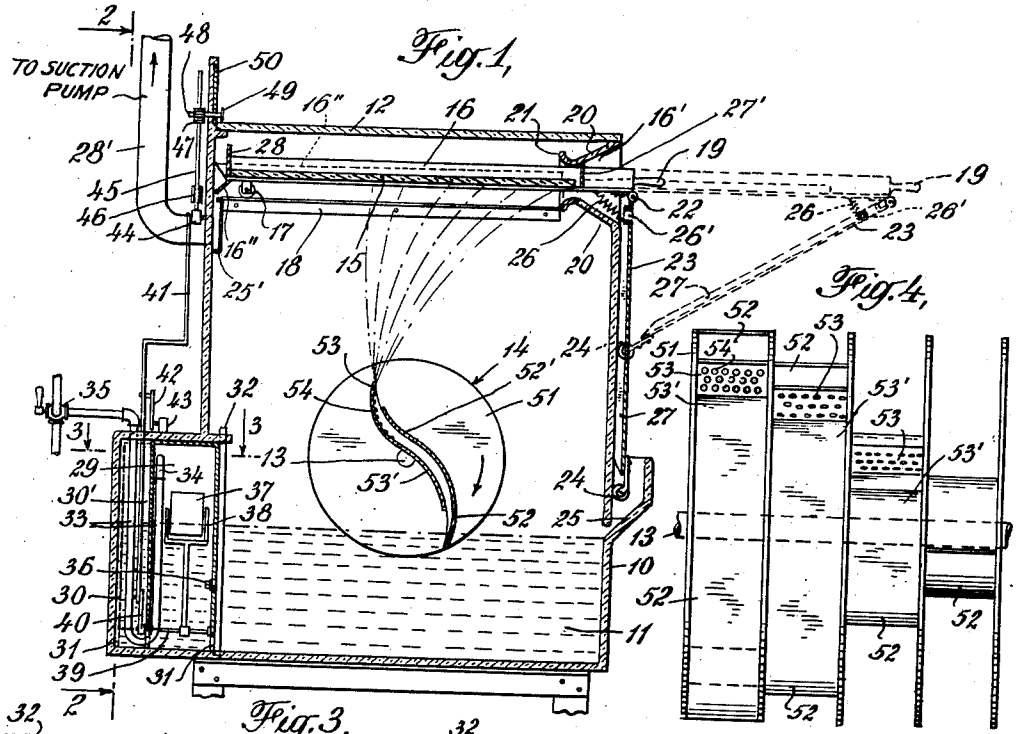

Fig. 4,

Fig. 3,

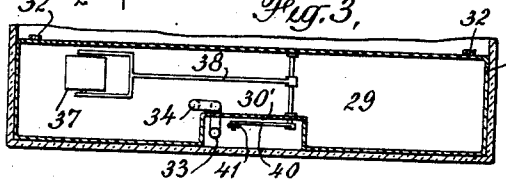

Fig. 2,

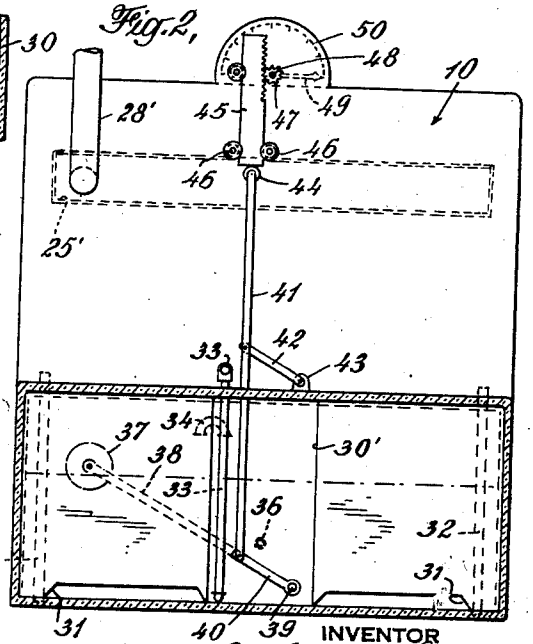

Fig. 5,

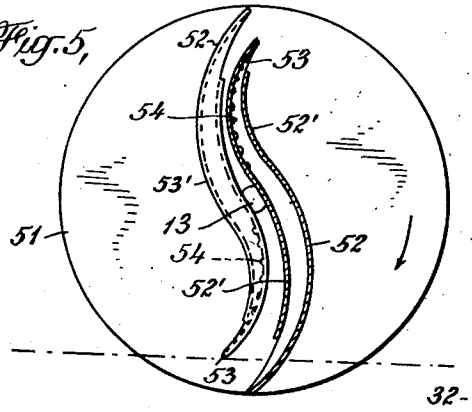

Tx 984

INVENTOR
Arthur H. Gaebel
BY
Arnold, Leary & Campbell
ATTORNEYS

Patented Nov. 11, 1941

2,261,988

UNITED STATES PATENT OFFICE

2,261,988

ETCHING APPARATUS

Arthur H. Gaebel, Larchmont, N. Y.

Application April 8, 1937, Serial No. 135,667

12 Claims. (Cl. 41—9)

This invention relates to etching machines and has particular reference to that type of etching machine in which a spray of etching liquor is directed upon the plate to be etched.

In my copending application Serial No. 60,046, filed January 21, 1936, there is disclosed an etching machine of the spray type in which the spray is produced by improved rotating paddle wheels partially immersed in the etching liquor bath, the level of which may be adjusted at will to vary the extent of immersion of the paddle wheels therein for the purpose of regulating the density and volume of the spray to suit various different etching conditions. The present invention is directed to improvements in the means for adjusting the etching liquor level, a different form of the paddle wheel and to other structural modifications.

In accordance with the present invention, an etching machine is provided in which the level of the etching liquor in the spray tank is regulated by fluid pressure, either positive or negative, without increasing or decreasing the volume of liquor for that purpose, whereby the relationship between the spray-producing means and the liquor may be minutely adjusted without changing the relative position of the spray paddle wheels or other spray-producing means that may be employed. The spray-producing means is preferably of the rotary paddle wheel type of novel construction in which the paddle that elevates the liquor does not distribute or spray it in the usual way, that function being transferred to a distributing device rotating with the corresponding paddle.

More particularly, the etching machine of this invention comprises a spray tank containing the etching liquor and having a fluid tight compartment communicating at its lower end with the interior of the tank. Connected to the compartment is a valve-controlled source of fluid pressure, such as compressed air. The valve is preferably of the three-way type and is normally closed.

When it is desired to raise the liquor level in the tank to increase the density and volume of the spray, the valve is opened to admit more air into the compartment to displace liquor therefrom into the tank. When it is desired to lower the liquor level in the tank, the valve is turned to the third position to discharge some of the air from the compartment, which is replaced by liquor from the tank.

Alternatively, the compartment may be connected to a source of negative pressure or suction, whereby opening of the valve to said source withdraws air from the compartment and causes the liquor level in the tank to drop. Conversely, when it is desired to raise the liquor level in the tank, the valve is opened to atmosphere, allowing air to enter the compartment to displace liquor therefrom into said tank. Where suction is employed the liquor level in the compartment is always higher than it is in the tank.

To avoid accidental withdrawal of liquor from the compartment into the suction line, a by-pass is provided between the compartment and tank below the normal liquor level, so that when the level in the tank drops to the by-pass, the vacuum in the compartment is broken and the liquor will rise no further therein. To render the machine adaptable to either suction or pressure use, this by-pass is provided in all models but is normally closed by a plug, which may be withdrawn when the machine is intended for suction use. In either case, means are provided for indicating the level of the liquor in the tank, and the valve is so manipulated as to adjust the liquor level as indicated by the indicator.

The preferred spray-producing means more particularly comprises a series of liquor-elevating paddles and a corresponding series of distributors mounted on a rotary shaft and so positioned in the spray tank that the elevating paddles are immersed in the liquor to a degree determined by the level adjusting means and as they rotate these paddles elevate liquor and transfer it past the axis of rotation to the distributors, which break it up into a spray that is directed upwardly against the plate to be etched, which is positioned in the upper part of the tank. The distributors do not dip into the liquor, are arranged to produce varying sprays, and are displaced angularly with respect to each other so as to direct their sprays upon different areas of the plate.

It will be seen that the machine of this invention provides a simple and effective apparatus for performing all sorts of etching work in an efficient manner. Other improvements are provided by this invention, as will appear from detailed description of the drawing, in which:

Figure 1 is a vertical section through the etching machine of this invention;

Fig. 2 is a vertical section through the pressure or suction compartment as seen along the line 2—2 of Fig. 1; and also illustrates the liquor level indicating mechanism at the rear of the machine;

Fig. 3 is a horizontal section through the compartment as seen along the line 3—3 of Fig. 1;

Fig. 4 is a side view of a portion of a modified form of the paddle wheel arrangement; and

Fig. 5 is an enlarged partial section through this modified form of paddle wheel.

Referring to Fig. 1 of the drawing, numeral 10 designates the tank of acid-proof metal, earthenware or the like, containing the bath of etching liquor 11 in its lower portion, and having a suitable cover 12, which may be metal or a glass observation plate, as described in said copending application. Located within the tank 10 is a rotary shaft 13 driven by suitable means, not shown, and fitted with paddle wheels 14 dipping into the liquor 11 for producing and directing a spray of liquor upwardly against the plate 15 to be etched, which is positioned on the upper portion of the tank 10 on a withdrawable drawer-like carriage 16.

The carriage 16 is open at the bottom and is fitted with wheels 17 rolling on rails 18 fixed in the tank 10. The outer end of the carriage 16 is provided with the pull handle 19 and projects through a narrow, slit-like opening 16' in the side wall of the tank, and with lateral inclined rear and side splash guards 16'', the guard 16'' on the rear being downwardly-directed and those along the side being upwardly-directed for preventing the spray from engaging the rear surface of plate 15. The frame of carriage 16 is adjustable to accommodate variously-sized plates 15 and as guards 16'' are on this frame they always surround the plate.

The opening 16' is defined by inwardly-turned converging flanges 20, the inner edges of which are reversely-turned to form the lips 21. The lip 21 on the upper flange 20 forms a gutter for collecting the liquor falling on the upper flange 20, while the lip 21 on the lower flange 20 forms a liquor deflector, whereby the spray does not issue from the carriage opening.

Hinged at 22 on the outer edge of the carriage 16 is a drip apron 23, which, when the carriage 16 is in operative or inner position, folds down out of the way over the outer wall of the tank 10 as shown. The lower edge of the apron 23 is preferably provided with rollers 24 and normally lies in the drip trough 25 discharging into the tank 10. A coil spring 26 extending between the apron 23 and the carriage 16 urges the rollers 24 against the tank wall. It will be observed that as is indicated in dotted lines in Fig. 1, the apron catches the drip from the carriage 16 as it is withdrawn and discharges it into the drip trough 25 below its lower edge. The apron 23 is preferably provided with narrow side flanges 27 and an opening 26' for access of air into 16' when the carriage 16 is in operative position. Spring 26 is sufficiently strong to aid in supporting the outer end of the carriage 16 when it is withdrawn to its outermost position, as limited by the engagement of the stop 28 with the upper flange lip 21.

A suction line 28' connected to an open-top box 25' positioned across the upper portion of the tank 10 opposite the carriage opening 16' withdraws the fumes and draws fresh air through the lower part of the carriage opening 16' and immediately across the under surface of the plate 15 to supply the oxygen necessary to rapid and effective etching where it is most needed. The upper part of the carriage opening 16' is closed by flange 27'.

Positioned either inside the tank 10 or outside, as shown, is a pressure compartment 29 which communicates with the lower end of the tank 10. For simplicity of construction, this compartment is preferably formed by an inverted, pressure-tight, rectangular, open-bottomed container 30, as shown in Figs. 1, 2 and 3. This container 30 is of acid-proof metal and rests on short legs 31 on the bottom of the tank 10, being held fixed within compartment 29 by rods 32, or the like, enabling ready installation, especially when an earthenware tank 10 is employed. As shown in Figs. 1 and 3, the rear wall of container 30 is recessed at 30' to admit passage of the pressure or suction pipe 33, which extends down to the bottom of the tank 10, turns under the edge of the container 30 and rises within the same to above the upper liquor level and then terminates in a goose-neck 34.

The pipe 33 is fitted with a three-way manual valve 35 of conventional design and is connected to a source of positive or negative fluid pressure, such as a compressed air or suction line, depending upon requirements. The three positions of the valve afford connection between the inside of the container 30 and the pressure or suction source, between the inside of the container 30 and atmosphere, and closed against both atmosphere and suction or pressure source.

The side wall of the container 30 is provided with a by-pass opening normally closed by a pipe plug 36, which remains in place where positive fluid pressure is employed. Where negative fluid pressure or suction is used, the plug 36 is removed to prevent liquor from being drawn into pipe 33 in case the valve 35 is held open too long. The by-pass is positioned at the lowest tank level of the liquor and when the level in the tank 10 drops to the by-pass, the vacuum in container 30 is broken and the liquor rises no further therein, and, in particular, cannot enter the goose-neck 34.

In order to indicate the level of the liquor in tank 10, which bears a definite relation to the liquor level in container 30, a float 37 is positioned in container 30, being connected to one end of a lever 38 whose other end is connected to a shaft 39 journalled in the container 30 near its lower end. Fixed to the outer end of shaft 39 and positioned within the recess 30' in the rear wall of container 30 is a short lever 40. Pivoted to the free end of this lever 40 is a rod 41 extending upwardly through the upper wall of compartment 29 along the rear wall of the machine. A second short lever 42 of the same length as lever 40 is pivoted at one end to rod 41 and at its other end on a lug 43 on the compartment 29. This lever 42 restrains the rod to rectilinear movement up and down as the float 37 rises and falls.

The upper end of the rod 41 is fitted with a roller 44 bearing against the lower flat edge of rack 45 moving between rollers 46. The rack 45 meshes with a pinion 47 fixed on a pin 48 journalled through the rear wall of the tank 10 and having a pointer 49 fixed to its other end and moving over the scale 50, which is visible from the front of the machine. The scale 48 is calibrated in units of liquor level in the tank 10, or degrees of spray density or volume. Because the level of the liquor in container 30 rises and falls to a greater degree than in tank 10, because of its lesser volume, it will be seen that the indicator 49, 50 is very sensitive and accurate.

The preferred form of paddle wheels 14 include separating discs 51 secured to the shaft

13 for rotation therewith. Fixed between adjacent discs 51 are the scoops 52 as shown in Fig. 4. Each scoop 52 is curved and trough-shaped for scooping up the liquor 11 into which the tip thereof dips as shown. Instead of retaining the liquor as does the conventional bucket type of paddle, the scoop 52 extends past the axis of rotation 13 and, as it rotates, it transfers the liquor to a distributor 53 positioned diametrically opposite to and in alignment with the scoop 52.

The inner surface of the distributor 53 is provided with spaced surface projections 54 which break up the stream of liquor, so that it issues from the end of the distributor 53 in finely-divided form. The distributor 53 is shorter radially than the corresponding scoop 52, so that its tip clears the liquor as the paddle wheel 14 rotates. In order to insure smooth operation the scoop 52 and distributor 53 are provided with cover plates 52' and 53', respectively.

Because the scoop 52 transfers the liquor past the axis of rotation 13, it may be to one side thereof, enabling the use of two sets of scoops and distributors between each adjacent pair of discs 51, as shown in Figs. 3 and 4. Also in order to uniformly cover each unit of area of the plate 15 to be etched, the curvature of the various distributors 53 is different, as indicated in Figs. 4–5. Furthermore, the adjacent paddles along the shaft 13 are displaced angularly with respect to each other, as shown in Fig. 4. This displacement may increase progressively so that the tips of the scoops 52 describe a spiral along the shaft 13.

In operation, the valve 35 is manipulated so as to adjust the level of the liquor 11 in tank 10 to the desired height with respect to the scoops 52, as indicated by 49, 50, so that they will raise more or less liquor, depending upon the density and volume of spray required for the particular etching work. Where the level-adjusting means operates under positive pressure, and if it is desired to raise the level in the tank, valve 35 is so manipulated that the interior of container 30 is connected to pressure line 33. The resulting increased fluid pressure within container 30 causes the liquor to be displaced therefrom into the tank 10 to raise the level therein to the desired point, as indicated at 49, 50, whereupon the valve 35 is closed. When it is desired to lower the liquor level, valve 35 is so manipulated as to permit some of the air in container 30 to be purged to atmosphere.

Where the level adjusting means operates under negative pressure or suction, the plug 36 is omitted, leaving the by-pass open. For increasing the level in the tank 10, valve 35 is opened to atmosphere, allowing air to enter container 30, so that the level therein drops and the level in the tank rises. In order to lower the level in the tank 10, valve 35 is turned to connect container 30 to suction line 33, so that liquor is drawn into the container from tank 10. If the valve 35 is inadvertently kept open too long to suction line 33, the liquor level in tank 10 drops to the by-pass, breaking the vacuum in container 30, so that ingress of liquor into line 33 is prevented.

As the paddle wheels 14 rotate, the scoops 52 elevate and transfer liquor past the axis 13 to the corresponding distributors 53, which finely divides it and variously directs it over the plate 15 in a uniform dense spray, so that every unit of area thereof is evenly treated. The fumes are meanwhile removed by suction line 28 and replaced by fresh air from the under side of opening 16', which traverses the surface of the plate 15, so that ample oxygen is provided for rapid etching.

While certain preferred embodiments of the invention have been illustrated and described herein, it is to be understood that the invention is not limited thereby but is susceptible of changes in form and detail within the scope of the appended claims, in which the term "fluid pressure means" comprehends either negative or positive pressure unless otherwise specified. It will also be understood that the liquor level adjusting means may be used with other liquor spray means and vice versa.

I claim:

1. In an etching machine, the combination of a receptacle for etching liquor, spray-producing means cooperating with the liquor in the receptacle, a compartment communicating with the receptacle below the level of the liquor therein and containing liquor, a pressure line connected to said compartment, and a three-way valve in said line for alternatively closing said line, connecting it to said compartment, and connecting said compartment to atmosphere, whereby the liquor level in said compartment may be varied to thereby adjust the level in said receptacle relatively to said spray-producing means.

2. In an etching machine, the combination of a receptacle for etching liquor, spray-producing means cooperating with the liquor in the receptacle, a compartment communicating with the lower portion of the receptacle and containing liquor, a suction line connected to said compartment for varying the level of the liquor therein to thereby vary the liquor level in the receptacle relatively to said spray-producing means, and a by-pass between said receptacle and compartment above said communication between them for preventing withdrawal of the liquor into said suction line.

3. In an etching machine, the combination of a receptacle for etching liquor, spray-producing means cooperating with the liquor in the receptacle, a container fixed in inverted position in said receptacle and communicating therewith adjacent the lower edge of said receptacle, a pressure pipe extending into said container and terminating at a point above the level of the liquor therein, and a valve in said pipe for controlling the pressure on the liquor in said container to vary the level therein and thereby vary the liquor level in said receptacle.

4. In an etching machine, the combination of a receptacle for etching liquor, and a rotary paddle wheel dipping into the liquor for producing a spray thereof, said wheel having a liquor scoop extending inwardly past the axis of rotation of the wheel for discharging the liquor elevated thereby to the opposite side of the wheel.

5. In an etching machine, the combination of a receptacle for etching liquor, and a rotary paddle wheel dipping into the liquor for producing a spray thereof, said wheel having a liquor scoop extending inwardly past the axis of rotation of the wheel for discharging the liquor elevated thereby to the opposite side of the wheel, and a liquor distributing plate at said opposite side of the wheel for receiving and spraying the liquor from said scoop.

6. In an etching machine, the combination of a receptacle for etching liquor, and a rotary paddle wheel dipping into the liquor for produc-

ing a spray thereof, said wheel having a liquor scoop extending inwardly past the axis of rotation of the wheel for discharging the liquor elevated thereby to the opposite side of the wheel, and an extension of said scoop on said opposite side of the wheel for discharging the liquor from said scoop, said extension terminating above the liquor level.

7. In an etching machine, the combination of a receptacle for etching liquor, and a rotary paddle wheel dipping into the liquor for producing a spray thereof, said wheel having a liquor scoop extending inwardly past the axis of rotation of the wheel for discharging the liquor elevated thereby to the opposite side of the wheel, and a distributing plate opposite the inner end of said scoop for receiving and spraying the liquor elevated thereby, said scoop and distributing plate being curved in the direction of their rotation.

8. In an etching machine, the combination of a receptacle for etching liquor, and a rotary paddle wheel dipping into the liquor for producing a spray thereof, said wheel having a liquor scoop extending inwardly past the axis of rotation of the wheel for discharging the liquor elevated thereby to the opposite side of the wheel, a distributing plate opposite the inner end of said scoop for receiving and discharging the liquor from said scoop, and projections on said plate for finely-dividing the liquor discharged thereby.

9. In an etching machine, the combination of a receptacle, means producing a spray of etching liquor in the receptacle, a drawer extending through an opening in the receptacle wall for holding the plate to be etched in the spray, and an inwardly projecting flange encircling the drawer opening in the wall of the receptacle for deflecting the spray from said drawer opening.

10. In an etching machine, the combination of a receptacle, means producing a spray of etching liquor in the receptacle, a drawer extending through an opening in a receptacle wall for holding a plate to be etched in the spray, and spray-deflecting means projecting outwardly from the drawer and terminating adjacent the walls of the receptacle whereby the spray is substantially prevented from passing beyond the drawer and engaging the rear surface of the plate.

11. In an etching machine, the combination of a receptacle having opposite walls, means producing a spray of etching liquor in the receptacle, a drawer extending through an opening in one of the receptacle walls for holding the plate to be etched in the spray, and means including an outlet in another wall of the receptacle opposite to the wall in which the opening is located for drawing air through the drawer opening and across the surface of the plate being etched.

12. In an etching machine, the combination of a receptacle, means producing a spray of etching liquor in the receptacle, a drawer extending through an opening in the receptacle wall for holding the plate to be etched in the spray, and a drip apron connected to said drawer adjacent its outer end and having an end disposed adjacent to the outer wall of said receptacle in all positions of said drawer to collect the liquor drip from said drawer and plate as the latter are withdrawn from said receptacle and means on said receptacle for receiving liquor from said apron and returning it to said receptacle.

ARTHUR H. GAEBEL.

