Dec. 15, 1964 L. K. FLEISCHMANN ETAL 3,161,276

STATIONERY CARRIER FOR WRITING MACHINES

Filed Jan. 26, 1962 3 Sheets-Sheet 1

FIG. 1

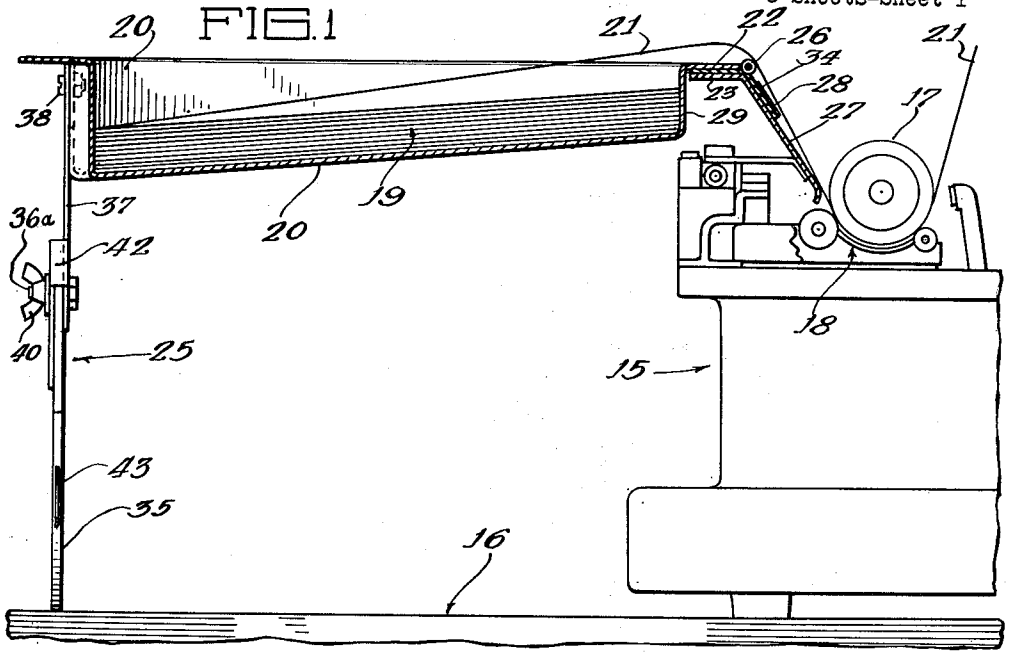

FIG. 2

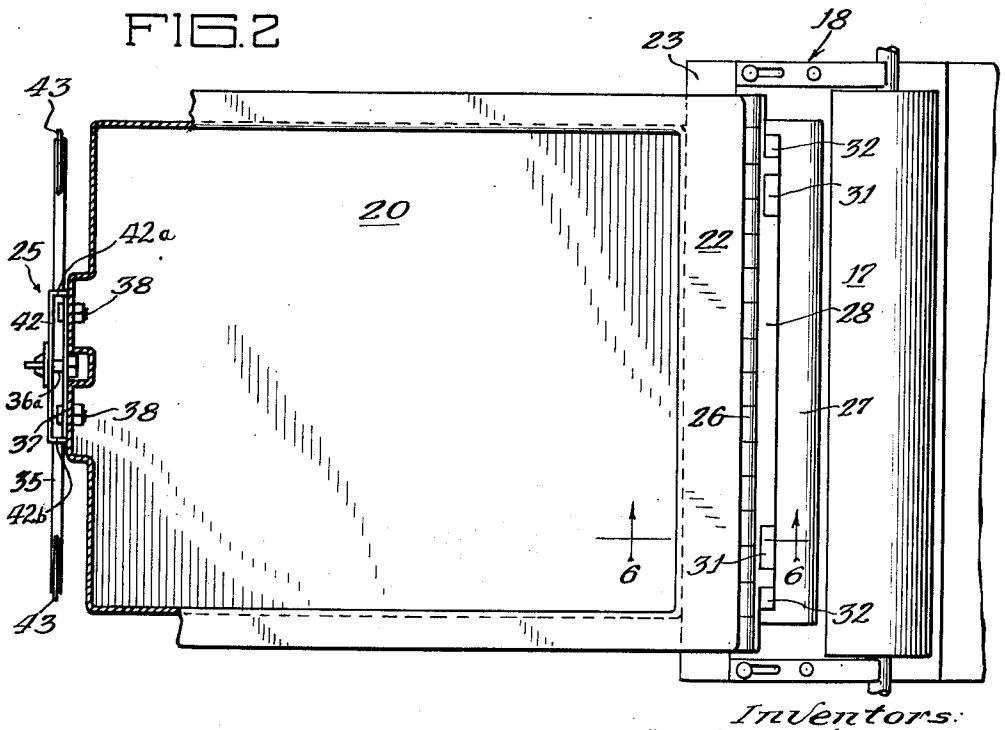

Inventors:
Lester K. Fleischmann
William J. Kenney
By: Hofgren, Brady, Wegner, Allen & Stellman
Attorneys

Dec. 15, 1964 L. K. FLEISCHMANN ETAL 3,161,276

STATIONERY CARRIER FOR WRITING MACHINES

Filed Jan. 26, 1962

3 Sheets-Sheet 2

FIG. 3

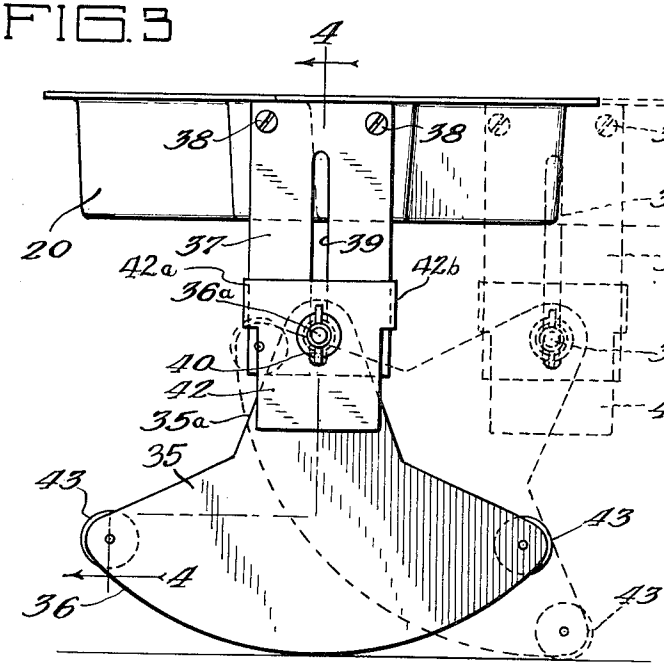

FIG. 4

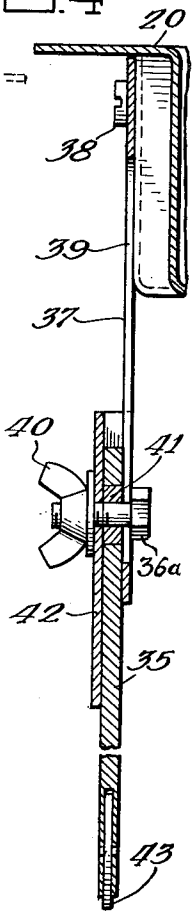

FIG. 5

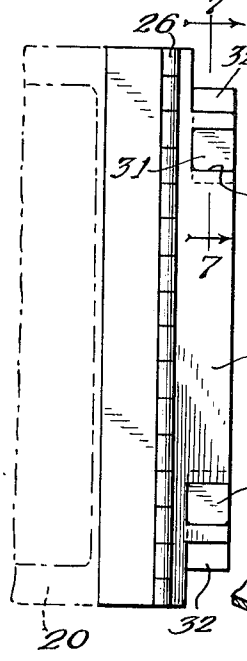

FIG. 6

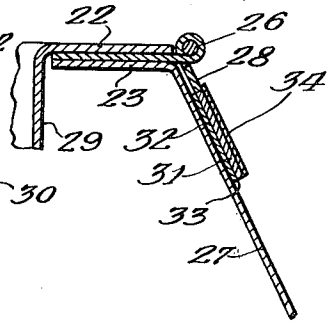

FIG. 7

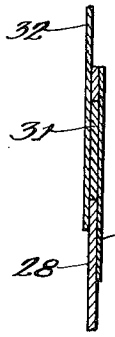

FIG. 8

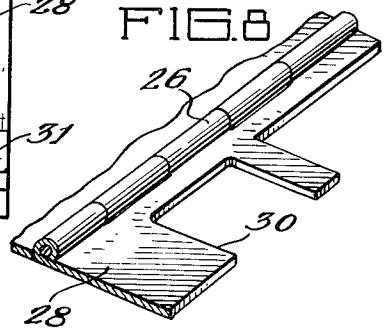

FIG. 9

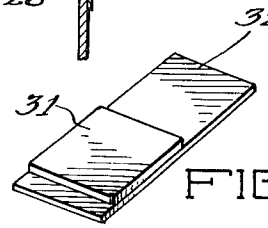

Dec. 15, 1964 L. K. FLEISCHMANN ETAL 3,161,276

STATIONERY CARRIER FOR WRITING MACHINES

Filed Jan. 26, 1962 3 Sheets-Sheet 3

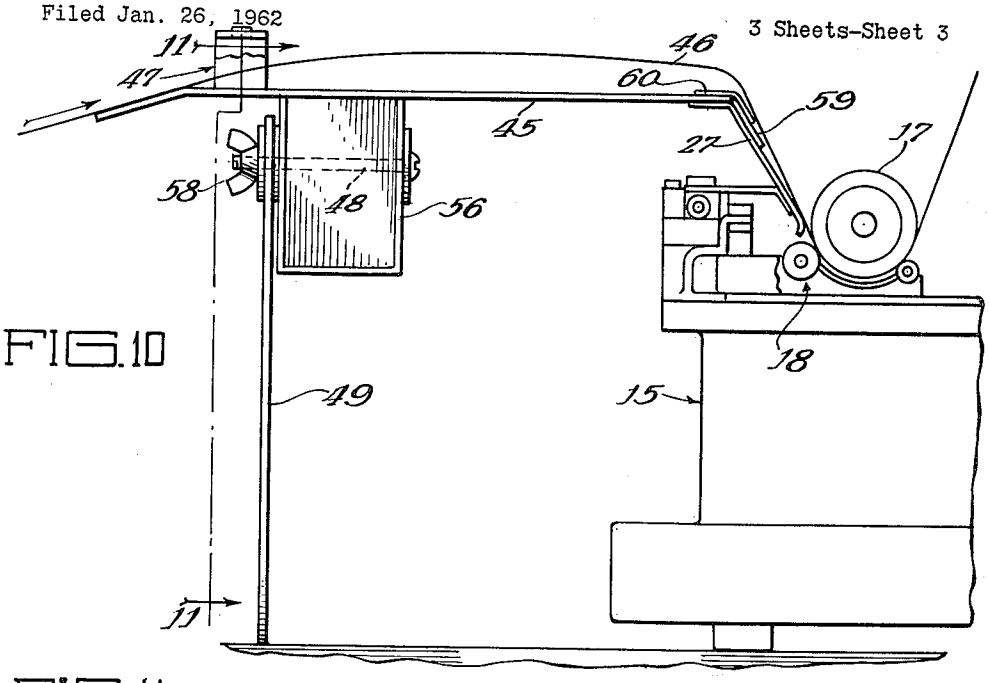

FIG. 10

FIG. 11

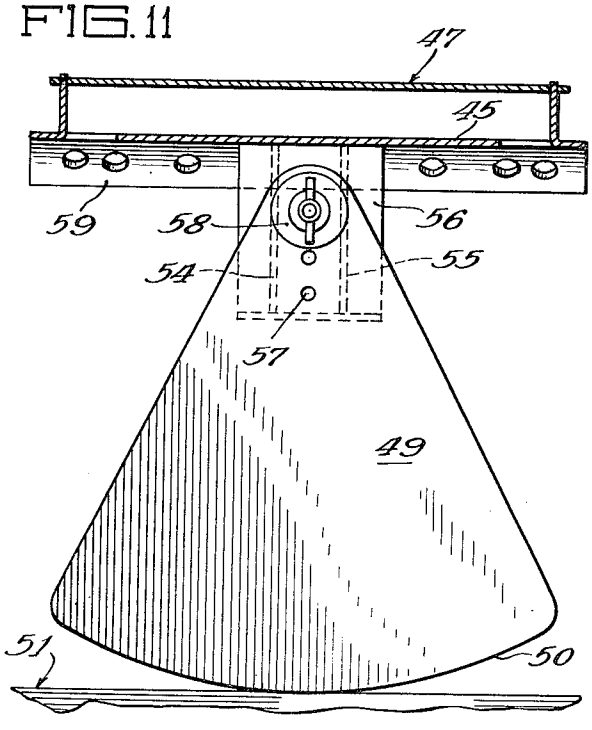

FIG. 12

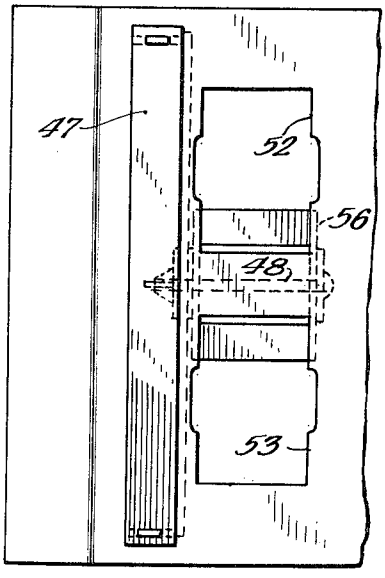

United States Patent Office 3,161,276 Patented Dec. 15, 1964

3,161,276

STATIONERY CARRIER FOR WRITING MACHINES

Lester K. Fleischmann, Highland Park, and William J. Kenney, Villa Park, Ill., assignors to Standard Manifold Company, a corporation of Illinois

Filed Jan. 26, 1962, Ser. No. 169,067
8 Claims. (Cl. 197—133)

This invention relates to a stationery carrier for a writing machine and more particularly to a carrier for continuous-forms attached to direct the forms to the carriage of a typewriter which moves laterally while carrying the stationery past a writing station.

Continuous-form stationery is generally supplied in a zig-zag folded stack with the folds occurring at some single or multiple form length so that the stack is regular and boxlike in form. The stationery is generally shipped in cardboard paper boxes and is often used by drawing the forms out of the box as required. In a typewriter type of instrument in which the carriage shifts from side to side while the writing progresses, there has been the problem of aligning the stationery from a zig-zag folded supply into proper relation to the writing machine carriage. Various guiding devices have been proposed including a carbon carriage which may shift from side to side with the writing machine carriage. Often, the stationery is not provided with interleaved carbon material but sheets of carbon paper are held in interleaved relation with the stationery so as to pass around the writing machine platen with at least one form length of the stationery. The guiding devices previously used have generally been relatively bulky, have required special efforts to align them with the writing machine, and have also required special attachments to secure them to the writing machine. The present invention is a very simplified, convenient and economic solution to the problems that have heretofore been present.

It is the primary object of this invention to provide a new and improved carrier for continuous-form stationery and guiding such stationery to a writing machine.

Another object of the invention is to provide a stationery carrier which includes a platform member adapted to support a supply of such stationery and to move it laterally with the carriage of the writing machine so that alignment is always maintained.

Another object is to provide such a carrier supported upon the writing machine carriage and a pedestal of novel construction permitting the shifting of the carrier with the writing machine carriage without affecting the operaion of the writing machine.

Another object is to make a particularly novel stationery carrier which is effective to support the weight of a supply of stationery in a manner so that the weight of the stationery does not interfere with the operation or movement of the carriage.

A further object is to provide a particularly inexpensive yet effective stationery carrier of the nature described.

Other objects, features and advantages of the present invention will be apparent from the following description of embodiments of the invention illustrated in the accompanying drawings, in which:

FIGURE 1 is a fragmentary side elevational view partially in section showing a typewriting machine and the stationery carrier of this invention in operative position in relation to the machine;

FIGURE 2 is a fragmentary top plan view of the machine shown in FIGURE 1 partially in section to show construction of the carrier;

FIGURE 3 is an elevational view of the carrier looking toward the left hand end of FIGURE 1 showing the carrier in two positions it may occupy during use;

FIGURE 4 is a fragmentary sectional view through the

pedestal support for the carrier taken substantially along line 4—4 in FIGURE 3;

FIGURE 5 is a fragmentary plan view of the end of the carrier shown in FIGURES 1 and 2 prepared for attachment to a typewriter carriage;

FIGURE 6 is a fragmentary sectional view along line 6—6 of FIGURE 2 showing the carrier attached to the typewriter carriage;

FIGURE 7 is a fragmentary sectional view through the attaching means taken substantially along line 7—7 in FIGURE 5;

FIGURE 8 is a fragmentary perspective view of a portion of the attaching means attached to the carrier;

FIGURE 9 is a perspective view of the attaching plate for cooperation with the structure of FIGURE 8;

FIGURE 10 is a view similar to FIGURE 1 of an alternate construction of the carrier;

FIGURE 11 is an end elevational view similar to FIGURE 3 of the construction shown in FIGURE 10 and being a section taken substantially alone line 11—11 in FIGURE 10; and

FIGURE 12 is a fragmentary top plan view of the carrier shown in FIGURES 10 and 11.

The use of the present invention is illustrated in FIGURES 1 and 2 in conjunction with a business office typewriter. For example, the typewriter 15 sits on a table 16, the platen 17 of the typewriter being movable from side to side as a part of the carriage 18. The supply of continuous-form stationery in the form of a zig-zag folded pack 19 is supported upon a platform member 20 which in this instance is the bottom of a pan-like tray. The stationery is directed from the pack around the platen of the typewriter as illustrated by the line 21 which extends from the pack in this manner. In this instance the stationery may consist of several plies of forms preprinted and in register with each other. The transfer of the written information from the typewriter keys on the first ply to the underlying plies may be made through carbon sheets held by a carbon holder in interleaved relation with the stationery itself. Various carbon holders are commercially available for threading upon the stationery and an improved form of such a holder is shown in the copending application of Lester K. Fleischmann, Serial No. 159,573, filed December 15, 1961, now Patent No. 3,107,106, issued October 15, 1963.

It may be noted from the top view of FIGURE 2 that the platform member 20 has a front ledge 22 extending forwardly to rest upon the top surface of the typewriter carriage formed by the top member 23. The tray which supports the stationery is actually fastened to the typewriter carriage and is intended to travel with the carriage as it moves intermittently during the typing operation. The construction is such that the tray moves quie readily without requiring the carriage return spring to be strengthened or altered in any way. Preferably, the tray is made of a light weight plastic or a paper product of the chipboard type so as to be light in weight. While the front end of the stationery supporting platform may rest upon the carriage of the typewriter, the opposite end is supported on a novel pedestal 25 which allows the movement of the tray to follow the movements of the typewriter carriage quite readily.

In order to provide a fastening of the front of the tray to the typewriter carriage, a piano-type hinge 26 may by provided at a point on the extension 22 to occur at the juncture of the top horizontal member 23 on the carriage and the paper guide 27 leading to the platen. A downwardly extending portion 28 is connected to the hinge to lie against the paperguide 27. A connection may be made between the part 28 and the paperguide insuring that the tray moves with the carriage. The end 29 of the tray preferably is also abutted against the back of

the carriage to aid in guiding the tray from side to side.

Referring particularly to FIGURES 5 to 9, one form of connection is illustrated. The inwardly extending part **28** connected to the hinge may have rectangular cutouts **30** into which a boss **31** on a small plate **32** fits quite snugly. The plates **32** may be provided with an adhesive on their underside, such as illustrated in FIGURE 6 by the numeral **33**. The plates are thus fastened directly to the paperguide **27** on the typewriter carriage and are flat so as not to interfere with normal use of the platen if and when the tray is disconnected and not used. The inwardly extending part **28** on the tray may be attached to a pair of spaced bosses provided by the plates **32**. This should give adequate support to insure that the tray will move from side to side with the typewriter carriage. Once the parts are interfitted, adhesive tape **34** of the pressure-sensitive type may be applied across the member **27** and boss **31** to insure that the parts do not come apart. Ordinarily, the surfaces of the boss and exposed surface of the part **28** are made so that they will be flush when assembled.

Other fasteners or fastening means between the carriage and receptacle for the stationery may be employed. As one example, it has been found in certain instances quite advantageous to apply a commercially available "Velcro" type of fastener between the top member **23** on the typewriter carriage and the forwardly extending flange **22** on the carrier. This type of a fastener may be pressed together to form the connection and simply pull it apart to release the connection.

An important structure in insuring that the carrier follows the typewriter carriage is the form of the pedestal **25** which bears a good part of the weight of the stationery. In this instance it is preferred that the pedestal have a relatively large rocker member **35** with an arcuate lower edge **36** of relatively gentle curvature and a generally upright leg member **35***a* joining the lower edge to the pedestal. In this instance the center of curvature on the rocker **35** is the bolt **36***a* which passes through the leg member to secure the rocker for swinging action. The structure which supports the rocker is an upstanding plate **37** having a bolted connection to the back side of the tray, the tray being provided with a plurality of vertically spaced openings to receive the fasteners **38**. The plate is provided with a vertical slot **39** receiving the bolt forming the pivot for the rocker. A wing nut **40** on the bolt provides for easy manual adjustment of the vertical position of the rocker and a washer **41** between a cover plate **42** and the upstanding plate **37** insures that the rocker will be free to swing. Considerable adjustment in the height of the rear end of the tray above the table top **16** may be accomplished by the adjustments provided.

The cover plate **42** loosely embraces the pedestal and a leg portion of the rocker. Either side of the cover plate is provided with inwardly turned ears or stop means **42***a* and **42***b*, each of which are in a position to abut the leg portion as the stationery carrier moves laterally to limit the relatively free lateral movement of the carrier so that a sudden or forceful throwing of the typewriter carriage cannot overthrow the carrier and thus cannot tend to loosen the securement of the stationery carrier relative to the carriage.

In operation the rocker swings quite readily while supporting the weight of the carrier and its contents. The arcuate lower surface **36** is of sufficiently large radius to move over stacks of paper or other obstructions and has been found sufficiently large to run over an object, such as a pencil, left upon the table **16**. The passing of the rocker over an obstruction simply elevates the rear end of the carrier pivoting the same above its piano hinge **26** without disturbing the operation of the writing machine. A "Velcro" fastener has built in sufficient looseness to permit considerable elevation or lowering of the rear end of the carrier and thus effectively operates as does the piano hinge. The leg portion is made of sufficient width so that free swinging of the rocker member

is permitted along a path generally coextensive in length with the path of travel of the standard typewriter carriage. To adjust the tray for use with larger typewriters having an oversized carriage and to insure that no binding of the pedestal will affect the lateral movement of the carrier, a relatively small, rotatable roller **43** may be appropriately incorporated at the ends of the arcuate surface **36**. Ordinarily, the rocker will simply slide on the arcuate surface, and the roller **43** will insure that the rocker may move sideways beyond the limit afforded by the stop means without undue binding or drag on the carriage.

An important function of the forms carrier is to guide that portion of the stationery directed to the platen of the typewriter in such a manner that it is properly aligned without tendency to skew. Instead of a supply of zig-zag folded stationery it is possible to provide the supply in a box and to thread the stationery over the platform member in such a manner that the alignment is obtained. In FIGURES 10 to 12 such a device is illustrated. Herein, the same typewriter **15** provided with its platen **17** and associate carriage **18** is equipped with a platform stationery carrier **45** over which stationery **46** is simply guided. An upstanding guide bar **47** provides a space through which the stationery **46** is threaded between the bar and the platform **45**. In this manner a reach of stationery is always held in alignment with the platen of the typewriter since the platform **45** is carried along with the carriage as is the carrier previously described. The guide bar **47** is also formed of the chipboard material and supported at each end on turned up portions out of the platform **45**.

In order to make an inexpensive and a light weight unit, the entire carrier may be formed of a paper product and die cut in a manner to make its necessary component parts. In FIGURES 10 to 11 the platform **45** is formed of a chipboard and a boxlike structure is formed for the reception of a bolt **48** about which a chipboard rocker member **49** is pivoted. The rocker member is provided with an arcuate lower edge **50** intended to roll over a platform or a platform support surface **51** in order to elevate the platform **45** to alignment with the top of the typewriter paperguide **27**. Two cutouts **52** and **53** (FIGURE 12) provide material which is turned downwardly to form braces **54** and **55** over which a U-shaped cover member **56** is fitted forming a box into which the bolt **48** is threaded. A plurality of vertically spaced openings **57** provide for vertical adjustment of the position of the bolt **48**. Preferably, an aluminum washer **58** provides a bearing for the rocker about the bolt.

At the front of the platform member **45** a hinged section **59** superimposed by a pressure-sensitive tape **60** provides means for attaching the carrier to the platen. A pressure-sensitive adhesive tape may be placed over the front hinged section **59** of the carrier and against the paperguide **27** to make a connection between the two members.

The use of a carrier of the type herein described also provides a convenient gage on the useful life of carbon sheets which may be interleaved with the stationery at the point of manufacture. If the carbon paper used is good for a certain number of forms, for example, fifty copies, the zig-zag folded supply **19** may be made in multiples of fifty forms with an interleaved carbon holder. Once this supply is placed in the tray or on the platform **45** in FIGURE 10 and is exhausted, the carbon holder may be discarded and a new supply of stationery obtained with a new carbon holder threaded thereon ready for use. The carrier herein described may be used in various ways, the traylike receptacle supporting a supply and the rest remaining on a table behind the carrier. The important aspect is that the carrier travels with the platen insuring that proper alignment is obtained. It has been found that an extremely good registration and operation is obtained if the size of the tray corresponds generally to the size of the zig-zag folded stack of stationery

to be placed thereon. There should be no tight fit which would interfere with the withdrawing of stationery from the tray.

The foregoing detailed description has been given for clearness of understanding only and no unnecessary limitations should be understood therefrom for some modifications will be obvious to those skilled in the art.

We claim:

1. A stationery carrier for a writing machine having a laterally movable carriage, comprising: a platform member having a substantially upright rear wall and a front laterally extending part to rest upon the writing machine carriage; means for securing the platform member to the carriage to travel laterally therewith; a column-like pedestal depending from the rear wall of the platform member and including a pivoted rocker arranged to pivot against and over a supporting table surface and the like as said carriage and platform member move from side to side with said writing machine carriage, said rocker having an arcuate lower portion in rolling engagement with the supporting surface and a generally upright leg member joining the arcuate portion to the pedestal; and stop means on said pedestal in a position to abut said leg member as said stationery carrier moves with the typewriter carriage to limit the lateral movement of said rocker.

2. The stationery carrier of claim 1 wherein said stop means is positioned on said pedestal in the path of travel of said leg member.

3. The stationery carrier of claim 1 wherein said pedestal is provided with a plate which embraces the leg member of said rocker and said stop means comprises inwardly turned ear portions of said plate member.

4. The stationery carrier of claim 1 wherein said pedestal is provided with an upright slot and a post passing through the slot and leg member with means for locking the post at selected positions along the length of the slot for adjusting the height of the carrier to adjust the same for use with writing machines having carriages of different heights.

5. The stationery carrier of claim 1 wherein said rocker member is provided with rollers in the arcuate lower portion thereof to permit additional movement of said pedestal after the leg member has come into contact with said stop means.

6. The stationery carrier of claim 1 wherein the front laterally extending part has a generally horizontal bearing section for resting upon the writing machine carriage and a lateral guiding section pivoted to said bearing section for resting against a paper guide to said platen and abutments are provided between said paper carrier guide and the paper guiding section to carry and guide the stationery carrier laterally with the writing machine carriage.

7. A stationery carrier for a writing machine having a laterally movable carriage, comprising: a platform member having a substantially upright rear wall and a front laterally extending part to rest upon the writing machine carriage; means for securing the platform member to the carriage to travel laterally therewith; and a column-like pedestal depending from the rear wall of the platform member, said pedestal including a pivoted rocker having an arcuate lower portion in rolling engagement with a supporting surface and a generally upright leg portion, said pedestal further including a substantially upright slot with a post extending therethrough and through said leg portion, said post having means thereon for locking the same at selected points along the extent of said slot for adjusting the height of the carrier, said pedestal affording the sole support for holding the platform above the support of said platform.

8. The stationery carrier of claim 7 wherein the front laterally extending part has a generally horizontal bearing section for resting upon the writing machine carriage and a lateral guiding section pivoted to said bearing section for resting against a paper guide to said platen and abutments are provided between said paper carrier guide and the paper guiding section to carry and guide the stationery carrier laterally with the writing machine carriage.

References Cited in the file of this patent

UNITED STATES PATENTS

1,853,303	Degener	Apr. 12, 1932
2,012,524	Thrift	Aug. 27, 1935
2,743,806	Haines	May 1, 1956

FOREIGN PATENTS

386,403	Germany	Dec. 18, 1923
501,348	Canada	Apr. 6, 1954