Jan. 14, 1947. O. M. DUNNING 2,414,143

MOUNTING DEVICE FOR AN ELECTRICAL CIRCUIT ELEMENT

Filed Sept. 15, 1943

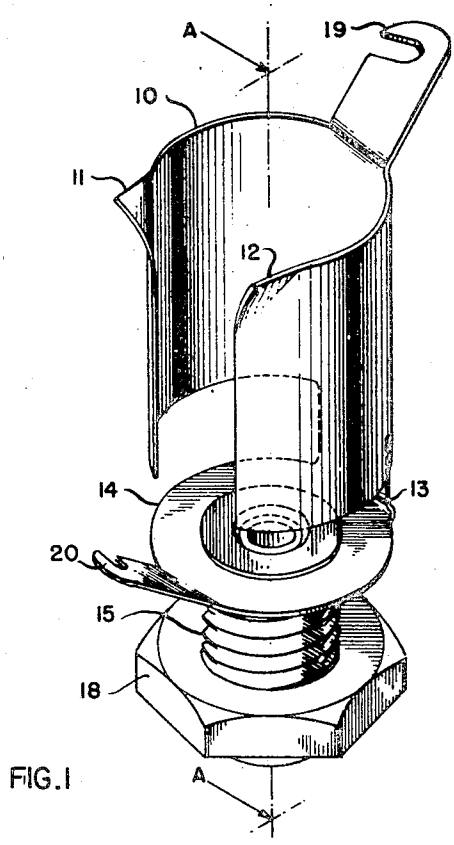

FIG.1

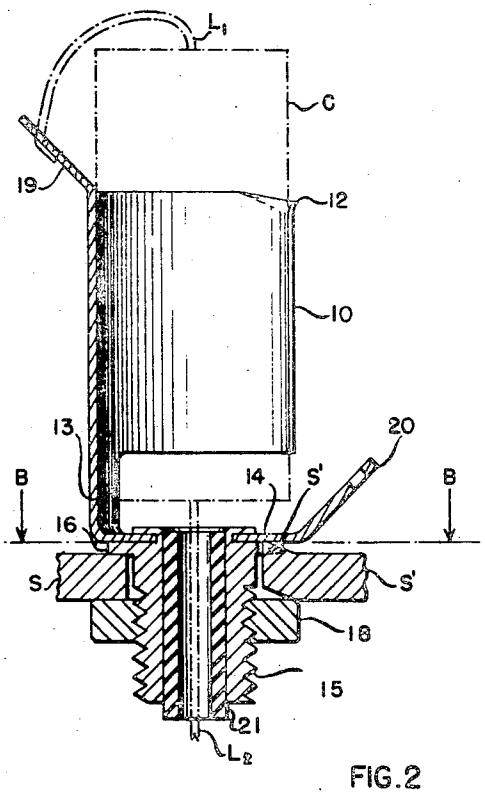

FIG.2

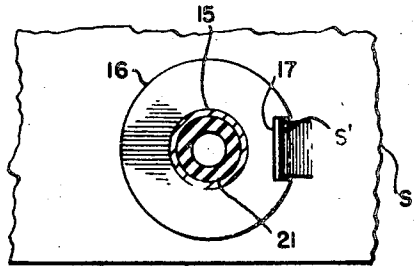

FIG.3

INVENTOR
ORVILLE M. DUNNING
BY Harry B. Page
ATTORNEY

Patented Jan. 14, 1947

2,414,143

UNITED STATES PATENT OFFICE

2,414,143

MOUNTING DEVICE FOR AN ELECTRICAL CIRCUIT ELEMENT

Orville M. Dunning, Great Neck, N. Y., assignor, by mesne assignments, to Hazeltine Research, Inc., Chicago, Ill., a corporation of Illinois

Application September 15, 1943, Serial No. 502,511

5 Claims. (Cl. 173—324)

1

This invention relates to a device for mounting an electrical circuit element on a supporting structure of a high-frequency circuit.

In constructing radio-frequency apparatus, such as commercial broadcast receivers, it is conventional practice to secure one or more insulated mounting strips to the chassis thereof for the purpose of mounting small electrical circuit elements in an orderly manner. Electrical terminals usually arranged in pairs on such mounting strips permit mounting resistors, condensers, radio-frequency chokes and similar circuit elements thereon by soldering the leads of the circuit elements to selected ones of the terminal pairs. Further, these terminals receive additional or extra leads through which the circuit elements arranged on the individual mounting strips are electrically connected in the circuit of the particular apparatus. It will be apparent that the extra leads to and from such terminals may have an appreciable length but, since the leads may be grouped in cables and fastened to the chassis through simple cable clamps, this feature is not undesirable in broadcast radio-frequency equipment, where such a mounting arrangement is generally satisfactory.

With the advent of apparatus operating on frequencies above the broadcast range, and particularly apparatus having an operating frequency in the ultra-high-frequency range, the construction techniques developed through long experience in the broadest field were found to be completely unsatisfactory in many cases. Thus, when mounting arrangements of the aforedescribed type are utilized in the construction of such ultra-high-frequency equipment, it is found that the distributed circuit constants of leads, which are largely ineffective at broadcast frequencies, contribute greatly to the operating characteristics of the circuit. For this reason, the described prior art arrangements, which generally require the use of extra leads of an appreciable and indeterminate length, are not suited for wide application in such high-frequency apparatus operating beyond the broadcast range.

It is, therefore, an object of the invention to provide a device especially suited for mounting an electrical circuit element on a supporting structure of a high-frequency circuit and which avoids the aforementioned limitations of prior art arrangements.

It is another object of the invention to provide an improved device for mounting an electrical circuit element on a supporting structure of a high-frequency circuit which substantially reduces the lengths of leads required electrically to connect an element mounted therein to its associated circuit.

2

It is another object of the invention to provide an improved device for mounting an electrical circuit element on a supporting structure of a high-frequency circuit which has a simple, compact and inexpensive construction.

In accordance with the invention, a device for mounting an electrical circuit element, having oppositely extending substantially coaxial conductive terminal leads, on a supporting structure of a high-frequency circuit comprises: a single socket of conductive material for receiving the element, the socket being proportioned to support the element throughout a substantial portion of its length; and an integral conductive projection extending from a small peripheral portion of the socket and having a flange portion provided with an aperture substantially coaxial with the socket. The device includes a conductive mounting means secured to the flange portion for mounting the socket on a supporting structure in a predetermined spaced relation thereto and having a longitudinally extending internal bore, in substantially coaxial alignment with the aperture of the flange and with the socket, to receive one of the coaxial leads of the circuit element.

For a better understanding of the present invention, together with other and further objects thereof, reference is had to the following description taken in connection with the accompanying drawing, and its scope will be pointed out in the appended claims.

Fig. 1 of the drawing is a perspective view of a device, in accordance with the invention, for mounting an electrical circuit element on a supporting structure; Fig. 2 is a cross-sectional view of the device taken along sectional line A—A of Fig. 1, showing an electrical circuit element supported thereby in spaced relation on a supporting structure; and Fig. 3 is an additional cross-sectional view of the device taken along the sectional line B—B of Fig. 2.

Referring now to the drawing, a device in accordance with a preferred embodiment of the invention for mounting an electrical circuit element on a supporting structure of a high-frequency circuit comprises a single socket 10 for receiving the element. The socket consists of a formed band of resilient and conductive material proportioned to support the element throughout at least a substantial portion of its length. This band preferably comprises a strip of brass, silver-

plated so as to have improved electrical conductivity and contact characteristics.

The illustrated embodiment, as shown in Fig. 2, is particularly constructed with a view to supporting a standard metal-cased by-pass condenser C. For efficient by-passing, condenser C may be of the type in which one terminal of the condenser is electrically connected to its enclosing metal case. A condenser of this type is usually provided with two leads indicated L_1 and L_2 in the drawing. Of these, lead L_1 is internally connected to the case and is brought out for connection to a suitable ground terminal, while lead L_2 is connected to the ungrounded terminal of the condenser and is insulated from the case. Such condensers are of a generally cylindrical configuration so that for the instant application socket 10 has the form of a split elongated cylinder. The internal diameter of the cylinder corresponds substantially to the diameter of condenser C and its longitudinal axis has a length equal to at least one-half that of the condenser. By proportioning the socket as indicated, the electrical element is supported throughout a substantial portion of its length, providing a mechanically rugged arrangement even though the element, per se, may be fragile, as is often the case.

One end of socket 10 has a flared opening, to facilitate inserting the condenser, as indicated at 11 and 12. An integral projection 13 extends from the opposite end of the socket and has a flange portion 14 including provisions for mounting the socket in a predetermined spaced relation on supporting structures. The angular relation between flange portion 14 and the longitudinal axis of socket 10 determines the spaced relation between the socket and its associated supporting structure. Where it is desired to have the socket substantially perpendicular to the supporting structure, flange portion 14 is disposed substantially transversely of the longitudinal axis of the socket, as illustrated in the drawing.

Flange portion 14 is provided with an aperture through which the described device may be riveted, soldered, or otherwise secured on a supporting structure. However, in the preferred embodiment a hollow externally threaded mounting member is utilized in mounting the device. Such member may comprise a screw 15 of silver-plated brass having an internal bore and a reduced section adapted to be received by the aperture in flange portion 14. A skirt or flange 16 is formed integrally with member 15 and includes a keyway 17, Fig. 3, constituting means for engaging a supporting structure to lock the socket 10 against rotation. In assembling member 15 to the mounting device, its reduced section is inserted into the aperture provided in the flange portion 14 and spun over. This construction, for the arrangement under consideration, causes the aperture in flange portion 14 and the internal bore of member 15 to be in substantially coaxial alignment with the longitudinal axis of socket 10. A silver-plated brass nut 18 threads onto mounting member 15 to hold the mounting assembly in position on a supporting structure.

Electrical connections may be made with the mounting device through suitable notched terminal lugs 19 and 20 formed integrally therewith. Terminal lug 19 comprises a projection extending from the flared end of socket 10 and deflected angularly away therefrom, while terminal lug 20 comprises a projection extending from flange portion 14. Additionally, an electrical connection with the element mounted in socket 10 is available through the internal bore of mounting member 15. Such connection may be insulated from the mounting device 10 by means of a sleeve 21 of any suitable insulating material, such as a polyvinyl resin, projecting through and beyond flange portion 14 and mounting member 15.

In utilizing the described device to mount an electrical circuit element, such as by-pass condenser C, in a predetermined spaced relation on a supporting structure S or chassis of a high-frequency circuit, the supporting structure is punched to provide an aperture having a diameter slightly larger than that of mounting member 15 and to provide a tab S' slightly narrower than the keyway of skirt 16 and projecting out of the plane of the supporting structure. Mounting member 15 is thereafter inserted into the aperture and oriented so that tab S' is received by the keyway of skirt 16. Nut 18 is then threaded upon member 15 and tightened to secure the mounting device in position and to force tab S' into full engagement with keyway 17, thereby locking socket 10 against rotation. Condenser C may now be inserted into socket 10 and connected into the circuit of the particular apparatus.

In the usual case the supporting structure S of the high-frequency circuit serves as a ground plate and one terminal of condenser C may be grounded by connecting its lead L_1 to terminal lug 19 or 20 of the mounting device. When the mounting device is positioned on the opposite side of chassis S from the circuit component to which the ungrounded terminal of the condenser is to be connected, the condenser is installed as illustrated in Fig. 2. That is, its lead L_2 projects through insulated sleeve 21 for direct connection with a circuit component (not shown) and its lead L_1 is soldered to lug 19. On the other hand, when the ungrounded terminal of condenser C is to be connected with a circuit component positioned on the same side of chassis S as the mounting device, the condenser is mounted in the socket 10 in the opposite direction so that lead L_1 will be soldered to terminal lug 20 and lead L_2 will connect directly with the other circuit component. In either case, a low-impedance circuit to ground is provided even for the high-frequency signals involved. This results from the fact that the grounded lead L_1 is extremely short, that it is shunted by the direct connection between the condenser case and socket 10, and also from the fact that the socket itself by its configuration presents a very low-impedance path to ground plate S.

For the described application, in which the mounting device is used to support a metal-cased condenser of the type having one terminal connected to the case, the lead inductance is reduced to an absolute minimum. This is especially desirable in the fabrication of apparatus designed to operate in the ultra-high-frequency range. Metal-cased condensers of other types in which the casing is completely insulated from the condenser terminals, as well as condensers having no metal casing, such as ceramic condensers, may likewise be advantageously mounted with the described structure. In each instance, the lead lengths may be reduced to a minimum and the condenser will be firmly supported mechanically. The same structure may be used to mount other circuit components, such as composition resistors and radio-frequency chokes. In such applica-

tions it is only necessary to form and proportion socket 10 in the described manner so as to support the circuit element throughout a substantial portion of its length. In these applications, the electrostatic shielding afforded by the mounting arrangement may be of considerable value.

When mounting a resistance element in the described device, there is the additional advantage that the mounting device, by having good thermal conductivity and by gripping a substantial porton of the resistor, provides an increased radiation surface. Through this effect, the operating temperature of the resistor is materially reduced, permitting additional dissipation or producing a greater safety factor if such additional dissipation is not utilized.

Several other important advantages of the described mounting device over the aforementioned mounting strips of the prior art will be readily apparent. For example, the described device may support a circuit element in such relation to the circuit in which it is to be incorporated that the lengths of its leads L_1 and L_2 are reduced to a fixed and absolute minimum value and no extra leads are required for connecting the element into the particular circuit. Also, the mounting device permits a circuit element supported therein to be connected easily with other circuit elements positioned on either side of the circuit-supporting structure S. Furthermore, such a device enables any number of circuit elements to be added substantially at will in a high-frequency circuit, whereas a conventional mounting strip is able to accommodate only a predetermined number of circuit elements.

It will be understood that the described arrangement comprises a preferred, but not exclusive, embodiment of the invention. For example, socket 10 may, if desired, be a screw-type socket and it need not necessarily be of resilient and conductive material. Also, flange portion 14 may have any desired angular relationship with reference to the longitudinal axis of socket 10. For certain applications, it may be arranged substantially parallel thereto for the purpose of supporting a circuit element in parallel relationship to a supporting structure.

Likewise, mounting member 15 is subject to a wide range of modifications. In accordance with one modification, member 15 may comprise a standard machine screw soldered to flange portion 14. When so modified, the mounting device may be secured to supporting structure S by providing therein a tapped hole to be engaged by the mounting screw. With such an arrangement, the screw provides means for adjustably mounting the socket 10 in spaced relation on a supporting structure.

While there has been described what is at present considered to be the preferred embodiment of this invention, it will be obvious to those skilled in the art that various changes and modifications may be made therein without departing from the invention, and it is, therefore, aimed in the appended claims to cover all such changes and modifications as fall within the true spirit and scope of the invention.

What is claimed is:

1. A device for mounting an electrical circuit element, having oppositely extending substantially coaxial conductive terminal leads, on a supporting structure of a high-frequency circuit comprising: a single socket of conductive material for receiving said element, said socket being proportioned to support said element throughout at least a substantial portion of its length; an integral conductive projection extending from a small peripheral portion of said socket and having a flange portion provided with an aperture substantially coaxial with said socket; and conductive mounting means secured to said flange portion for mounting said socket on a supporting structure in a predetermined spaced relation thereto and having a longitudinally extending internal bore, in substantially coaxial alignment with said aperture of said flange and with said socket, to receive one of said coaxial leads.

2. A device for mounting an electrical circuit element, having oppositely extending substantially coaxial conductive terminal leads, on a supporting structure of a high-frequency circuit comprising: a single socket of conductive material for receiving said element, said socket being proportioned to support said element throughout at least a substantial portion of its length; an integral conductive projection extending from a small peripheral portion of said socket and having a flange portion provided with an aperture substantially coaxial with said socket; conductive mounting means secured to said flange portion for mounting said socket on a supporting structure in a predetermined spaced relation thereto and having a longitudinally extending internal bore, in substantially coaxial alignment with said aperture of said flange and with said socket, to receive one of said coaxial leads; and a sleeve of insulating material disposed within said bore of said mounting means to provide an insulated channel therethrough.

3. A device for mounting an electrical circuit element, having oppositely extending substantially coaxial conductive terminal leads, on a supporting structure of a high-frequency circuit comprising: a single socket of conductive material for receiving said element, said socket having an electrical terminal formed at one end thereof and being proportioned to support said element throughout at least a substantial portion of its length; an integral conductive projection extending from a small peripheral portion of the opposite end of said socket and having a flange portion provided with an aperture substantially coaxial with said socket; conductive mounting means secured to said flange portion for mounting said socket on a supporting structure in a predetermined spaced relation thereto and having a longitudinally extending internal bore, in substantially coaxial alignment with said aperture of said flange and with said socket, to receive one of said coaxial leads; and a second electrical terminal supported by said mounting means in the vicinity of said opposite end of said socket.

4. A device for mounting an electrical circuit element, having oppositely extending substantially coaxial conductive terminal leads, on a supporting structure of a high-frequency circuit comprising: a single socket of conductive material for receiving said element, said socket being proportioned to support said element throughout at least a substantial portion of its length; an integral conductive projection extending from a small peripheral portion of said socket and having a flange portion provided with an aperture substantially coaxial with said socket; and a hollow externally threaded conductive mounting member secured to said flange portion in substantially coaxial alignment with said aperture thereof for mounting said socket on a supporting structure in a predetermined spaced relation

thereto, said mounting means being adapted to receive one of said coaxial leads through the hollow interior thereof.

5. A device for mounting an electrical circuit element, having oppositely extending substantially coaxial conductive terminal leads, on a supporting structure of a high-frequency circuit comprising: a single cylindrical socket of resilient and conductive material having a flared opening at one end for receiving said element, said socket being proportioned to support said element throughout at least a substantial portion of its length; an integral conductive projection extending from a small peripheral portion of the opposite end of said socket and having a flange portion provided with an aperture substantially coaxial with said socket; and conductive mounting means secured to said flange portion for mounting said socket on a supporting structure in a predetermined spaced relation thereto and having a longitudinally extending internal bore, in substantially coaxial alignment with said aperture of said flange and with said socket, to receive one of said coaxial leads.

ORVILLE M. DUNNING.