Dec. 3, 1935. W. J. HALL 2,023,224

HOOD CONSTRUCTION

Filed Dec. 28, 1933

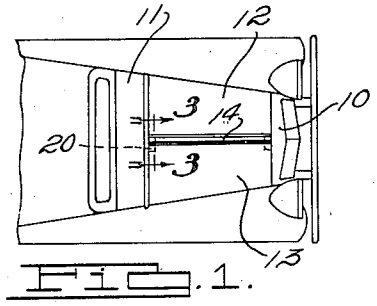

Fig. 1.

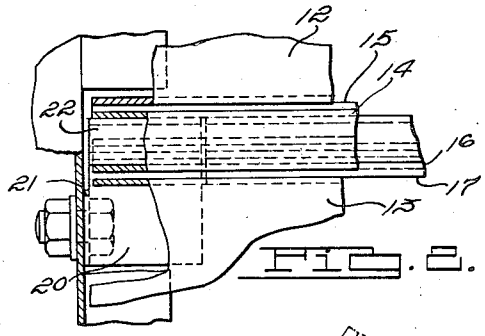

Fig. 2.

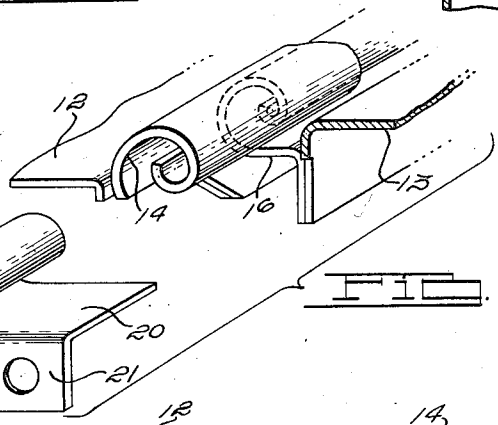

Fig. 4.

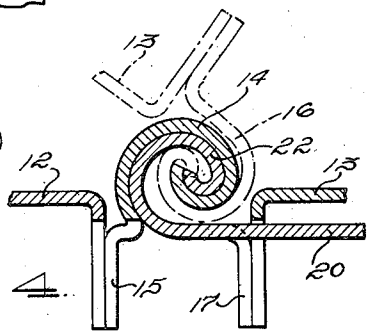

Fig. 3.

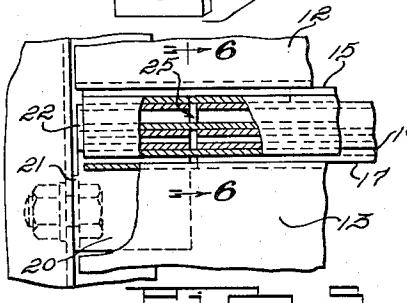

Fig. 5.

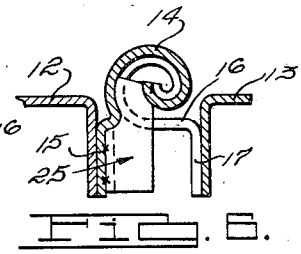

Fig. 6.

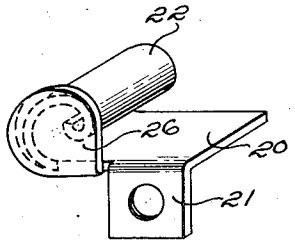

Fig. 7.

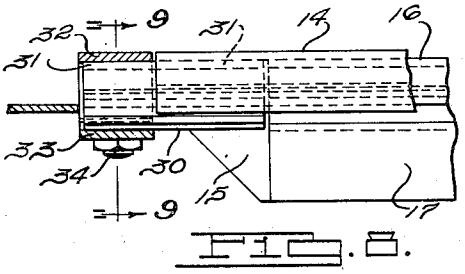

Fig. 8.

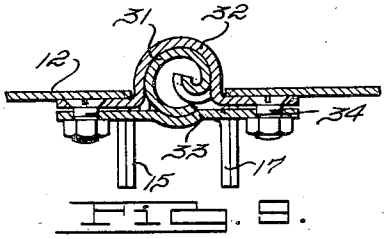

Fig. 9.

INVENTOR.

William J. Hall.

BY

Harness, Dickey, Pierce & Mann.

ATTORNEYS.

Patented Dec. 3, 1935 2,023,224

UNITED STATES PATENT OFFICE

2,023,224

HOOD CONSTRUCTION

William J. Hall, Detroit, Mich., assignor, by mesne assignments, of thirty per cent to Ollie L. Herron, thirty per cent to Joseph B. Zimmers, thirty-three per cent to William J. Hall, and seven per cent to R. C. Schemmel

Application December 28, 1933, Serial No. 704,219

21 Claims. (Cl. 180—69)

The invention relates to hinge constructions and it has particular relation to a hinge for mounting hood wings on automobiles.

One object of the invention is to provide an improved hinge construction comprising plate members having interfitting beads, wherein improved means are provided for pivotally mounting the hinge on a support.

Another object of the invention is to provide a hinge construction of this character wherein the means for pivotally mounting the hinge on the support includes a bead element substantially corresponding in shape to one of the beads on the plate members and which is hingedly connected to the other bead.

Another object of the invention is to provide a hinge construction of this character wherein improved means are provided for preventing relative axial movement of the plate members.

Another object of the invention is to provide an improved hinge construction which can be manufactured less expensively from sheet metal.

Other objects of the invention will become apparent from the following description taken in conjunction with the drawing and from the claims hereinafter set forth.

For a better understanding of the invention, reference may be had to the drawing forming a part of the specification, wherein:

Figure 1 is a fragmentary plan view of an automobile having a hood thereon constructed according to one form of the invention.

Fig. 2 is a plan view of one end of the hinge construction for the hood with certain parts broken away and shown in cross section for the purposes of clarity.

Fig. 3 is a cross-sectional view on a larger scale taken substantially along the line 3—3 of Fig. 1.

Fig. 4 illustrates the end of the hood and hood hinge as separated from the automobile with one of the hinge brackets for mounting the hinge on the automobile shown in separated relation.

Fig. 5 is a view similar to Fig. 2 wherein an abutment member is provided between certain parts of the hinge for preventing relative axial movement of the hinge parts.

Fig. 6 is a cross-sectional view taken substantially along the line 6—6 of Fig. 5.

Fig. 7 is a view showing the bracket illustrated in Fig. 4 provided with an end plate for preventing movement of the outer hinge part.

Fig. 8 illustrates a hinge construction wherein a different type of bracket is employed for supporting the ends of the hinge on the automobile.

Fig. 9 is a cross-sectional view taken substantially along the line 9—9 of Fig. 8.

Referring to Fig. 1, the radiator of the automobile is indicated at 10, the cowl at 11, and opposed hood wings at 12 and 13. The wings 12 and 13 are interconnected by a hinge construction comprising an outer or female part 14 having an attaching flange 15 secured in this case to an attaching flange on the wing 12 and an inner part 16 having an attaching flange 17 secured to an attaching flange on the wing 13. The two parts of the hinge are generally identical to the hinge construction disclosed in my Patent 1,910,763, issued May 23, 1933. As the wing 13 is raised, the wing and inner hinge part 16 assume the broken line positions shown and when the wing 12 is raised the relation of hinge parts is the same as when the hinge 13 is raised, although in this case the wing 13 remains stationary.

As shown best by Figs. 2 and 4, the outer or female hinge part 14 extends substantially throughout the length of the hood wings 12 and 13 but the inner hinge part 16 is shorter in length or, in other words, the ends of the outer hinge part 14 extend beyond the ends of the inner hinge part. As shown, the attaching flanges are cut back substantially to the ends of the inner hinge part 16, and for hingedly mounting the hinge on the cowl and radiator of the automobile, brackets 20 are provided which may have vertical flanges 21 provided with openings for securing the brackets to the cowl and radiator. At one edge the brackets have hinge parts 22 which substantially correspond to the inner hinge part 16 in shape and which interfit with the extending end portions of the outer hinge part 14. With each bracket and hinge part 22 thereon in position as shown by Fig. 3, it will be appreciated that when the wing 13 is raised its hinge part 16 will hinge about the outer hinge part 14 and when the wing 12 is raised it will hinge about both the hinge part 16 on the wing 13 and the hinge parts 22 on the stationary brackets 20. Thus the brackets on the cowl and radiator with their hinge parts 22 interfitting with the extending ends of the hinge part 14 on the wing 12 serve as pivotal supports for the hinge on the cowl and radiator. It will be appreciated that this arrangement enables elimination of ordinary bracket supports on automobiles which are disposed at the ends of the hinge between the wings of the hood and furthermore it will be appreciated that the brackets 20 will not be visible for the reason that they will be covered by the outer hinge part 14. This construction can be

readily manufactured in the same manner that the hinge parts are constructed from sheet metal.

While normally the hinge parts may not move axially in a relative manner, it may be advantageous or desirable to provide an additional lock and one form of lock is illustrated in Figs. 5 and 6. In this construction a slight space is provided between the inner end of one of or both brackets 20 and the adjacent end of the inner hinge part 16, and adjacent this space, a locking element 25 is secured to the outer hinge part 14 and has a flange projecting between the end of the hinge part 16 and the adjacent end of the hinge part 22 on the bracket. It is apparent that the flange on the element 25 is disposed transversely of the adjacent end faces of the hinge parts 16 and 22 thereby preventing axial movement of the inner hinge part 16 with respect to the outer hinge part 14 and also preventing relative axial movement of the outer hinge part 14 with respect to the bracket.

In the construction shown by Fig. 7, the brackets 29 may have flange portions 26 that may be bent from the body part of the brackets into covering relation to the end faces of the hinge part 22. Preferably, the covering portion 26 will have a rounded periphery to correspond with the curvature of the hinge part and also will be of sufficient dimensions that it will cover the end face of the outer hinge part 14 when the parts are related as shown by Fig. 3. The hinge parts 22 on the brackets will prevent movement of the inner hinge part 16 while the covering portions 26 on the hinge parts 22 will prevent movement of the outer hinge part 14.

In the construction shown by Figs. 8 and 9, brackets 30 having hinge parts 31 corresponding to the hinge parts 22 on the brackets 29 may cooperate in the same way with the extended end portions of the outer hinge part 14 but in this case it is found desirable to have the hinge part 31 of the bracket extending beyond the ends of the outer hinge part 14. These extended ends of the hinge parts 31 project into clamping brackets on the cowl and radiator and which comprise portions 32 and 33 held together by bolts 34 and preferably the extended ends of the hinge parts 31 will be deformed into substantial cylinders so as to fit between the bracket portions. The brackets then are clamped to positively hold the hinge parts 31 against turning movement. In operation this construction will function practically in the same way that the construction operates in conjunction with the brackets 20, the difference in operation being that the brackets 20 are secured to the cowl and radiator by screws or the like whereas in the construction shown by Figs. 8 and 9 the brackets 30 have their hinge parts extending into the clamping brackets on the cowl and radiator so as to positively hold them against turning movement.

While the brackets 20 and 30 are shown as having hinge portions corresponding to the inner hinge part 16, it is manifest that they might correspond to the outer hinge part 14, in which event the inner hinge part 16 would extend beyond the ends of the hinge part 14 so that the bracket hinge portions could interfit with such extended ends.

The invention provides improvements in hinges particularly adapted for hood constructions and a new arrangement for mounting hood wings on spaced supports such as the cowl and radiator of an automobile. It will be readily apparent that the constructions may be economically produced from sheet metal and that a neat appearing hinge results with the outer hinge part 14 providing an uninterrupted surface along the adjacent edges of the hood wings. The hinge of course is of tight construction to prevent water entering the motor space and the arrangement of the hinge parts is such that marring or scratching of exposed surfaces is prevented.

Although more than one form of the invention has been illustrated and described in detail, it will be apparent to those skilled in the art that various modifications may be made without departing from the scope of the appended claims.

I claim:

1. In combination, spaced supports, a pair of plate members having interfitting beads hingedly connecting the members, stationary bead elements substantially corresponding in shape to the bead on one plate member and interfitting with end portions of the bead member on the other plate member, and means fastening the bead elements to the supports so as to pivotally mount the members on the supports.

2. In combination, spaced supports, a pair of plate members having interfitting beads one of which at its ends projects beyond the ends of the other, stationary bead elements substantially corresponding in shape to the shorter bead and interfitting with the extended ends of the longer bead, and means fastening the bead elements on the supports.

3. In combination, a support, a pair of plate members having interfitting beads, a stationary bead element corresponding substantially in shape to the bead on one plate member and interfitting with the end portion of the other bead, and means for fastening the bead element on the support.

4. In combination, a support, a pair of plate members having interfitting beads one of which extends beyond the end of the other bead, a stationary bead element substantially corresponding in shape to said other bead and interfitting with the extended portion of the first bead, and means fastening the bead element on the support.

5. In combination, a pair of supports, a pair of plate members respectively having interfitting outer and inner curved edges hingedly connecting the members, the outer curved edge extending beyond the ends of the inner curved edge, stationary elements having curved edges substantially corresponding to the inner curved edge and interfitting with the extended ends of the outer curved edge, and means for fastening the elements to the supports.

6. In combination, spaced supports, a pair of plate members having interfitting beads one of which at its ends projects beyond the ends of the other, stationary bead elements substantially corresponding in shape to the shorter bead and interfitting with the projecting ends of the longer bead, means fastening the elements on the supports, and means for normally preventing relative axial movement of the plate members.

7. In combination, spaced supports, a pair of plate members having interfitting beads one of which at its ends projects beyond the ends of the other, bead elements substantially corresponding in shape to the shorter bead and interfitting with the projecting ends of the longer bead, means fastening the elements on the supports, and means on the elements normally preventing relative axial movement of the plate members.

8. In combination, spaced supports, a pair of plate members having interfitting beads one of which at its ends projects beyond the ends of

the other, bead elements substantially corresponding in shape to the shorter bead and interfitting with the projecting ends of the longer bead, means fastening the elements on the supports, and means for normally preventing relative axial movement of the plate members and including abutments on the elements overlapping the end faces of the longer bead.

9. In combination, spaced supports, a pair of plate members having interfitting beads one of which at its ends projects beyond the ends of the other, bead elements substantially corresponding in shape to the shorter bead and interfitting with the projecting ends of the longer bead, means fastening the elements on the supports, and means for normally preventing relative axial movement of the plate members and comprising an element on the longer bead between an end of the shorter bead and the adjacent end of the bead element and projecting across the end faces of said shorter bead and bead element.

10. In combination, spaced supports, a pair of plate members having interfitting beads hingedly connecting the members, stationary bead elements substantially corresponding in shape to the bead on one plate member and interfitting with end portions of the bead member on the other plate member and comprising apertured brackets on the support tightly engaging end portions of the bead elements.

11. In combination, a support, a pair of plate members having interfitting beads hingedly connecting the members, one of such beads projecting beyond the end of the other, a bead element interfitting with the projecting end of the projecting bead, and means substantially within the length of said projecting bead end for fastening the element on the support.

12. In combination, a support, a pair of plate members having interfitting beads hingedly connecting the members, the outer of the beads projecting beyond one end of the inner bead, a bead element interfitting with the projecting end of the outer bead, and means substantially within the length of said projecting end of the outer bead for fastening the element on the support.

13. In combination, a support, a pair of plate members having interfitting beads hingedly connecting the members, one of such beads projecting beyond the end of the other, a bead element interfitting with the projecting end of the projecting bead and terminating at its outer end substantially within the length of such projection, and means for fastening the element on the support.

14. In combination, a support, a pair of plate members having interfitting beads hingedly connecting the members, one of such beads projecting beyond the end of the other, a bead element interfitting with the projecting end of the projecting bead, and means connected to the element within the length of such projecting end for mounting the element on the support.

15. In combination, a support, a pair of plate members having interfitting beads hingedly connecting the members, one of such beads projecting beyond the end of the other, a bead element interfitting with the projecting end of the projecting bead, and means normally concealed by such projecting end for mounting the element on the support.

16. In combination, a support, a pair of plate members having interfitting beads hingedly connecting the members, one of such beads projecting beyond the end of the other and over the support, and a bead element mounted on the support under such projecting end and having interfitting relation with such end for hingedly mounting the plate members on the support.

17. In combination, a support, a pair of plate members having interfitting beads hingedly connecting the members, one of such beads projecting beyond the end of the other, a bead element substantially corresponding in shape to the shorter of the beads and having interfitting relation with the projecting end of the longer bead and being hingedly related to such projecting end, and means for mounting the bead element on the support.

18. In combination, a plate member having one of its edges turned to provide a curled bead, separated plate members provided with curled edges having interfitting and hinging relation with the first bead, a support, and means for fastening one of the last mentioned plate members on the support.

19. In combination, a pair of spaced supports, a pair of hood sections having elongated and interfitting, curled edges for hingedly connecting the members, one of said edges projecting at its ends beyond the ends of the other, plate members having curled edges respectively interfitting with and hingedly connected to said projecting ends of one of the curled edges on the hood sections, and means fastening the plate members on the supports respectively.

20. In combination, a pair of spaced stationary supports, a pair of plate members having interfitting beads hingedly connecting the members, the outer of said beads projecting beyond the ends of the inner bead, and means mounting the beads on the supports, said means including elements projecting within and cooperating with the projecting end portions of the outer bead, and including other elements mounted on said supports, both of said elements lying substantially within the outer ends of the projecting end portions of the outer bead.

21. In combination, a pair of spaced stationary supports, a pair of plate members having interfitting curved edge portions hingedly connecting the members, the outer of said portions projecting beyond the ends of the inner portion, elements having curved edges longitudinally disposed within the projecting ends of the outer edge portion and substantially corresponding in shape thereto, and also having plate-like portions for mounting the elements on the supports.

WILLIAM J. HALL.