June 11, 1940. G. E. MEGOW ET AL 2,203,996

BENDABLE ELECTRIC LEAD

Original Filed July 15, 1937

Fig. 1

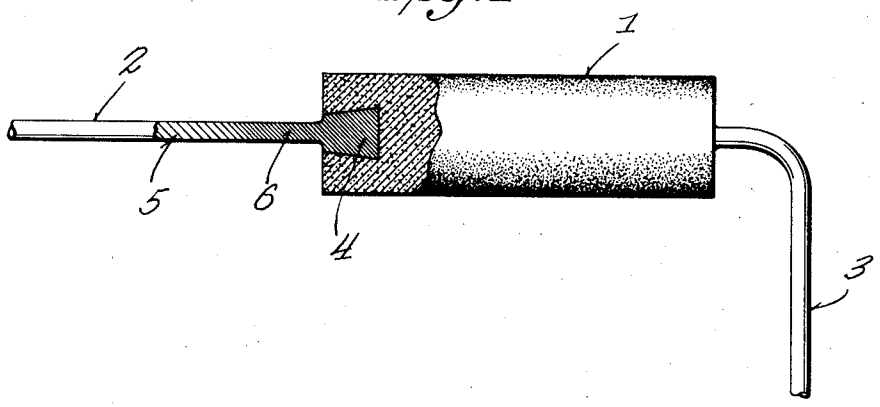

Fig. 2

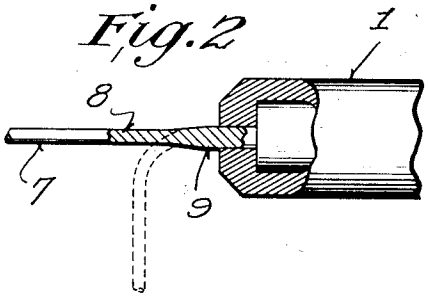

Fig. 3

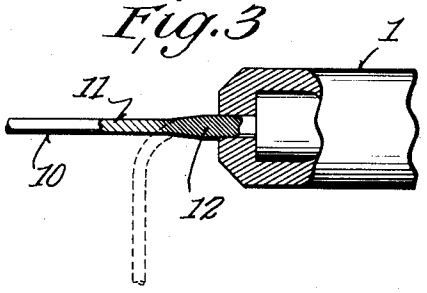

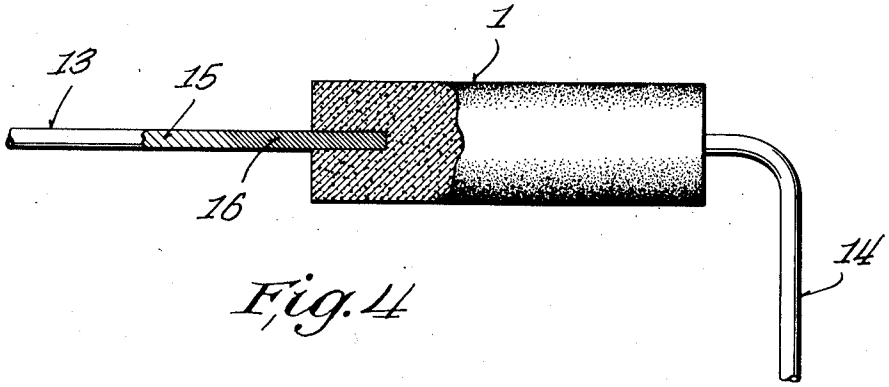

Fig. 4

INVENTORS
George E. Megow
Howard C. Thomson

BY Louis Quarles
ATTORNEY.

Patented June 11, 1940 2,203,996

UNITED STATES PATENT OFFICE

2,203,996

BENDABLE ELECTRIC LEAD

George E. Megow, South Milwaukee, and Homer G. Thomson, Milwaukee, Wis., assignors to Allen-Bradley Company, Milwaukee, Wis., a corporation of Wisconsin

Original application July 15, 1937, Serial No. 153,746. Divided and this application February 1, 1938, Serial No. 188,020

6 Claims. (Cl. 201—63)

This invention relates to improvements in electrical components formed as compact, rigid bodies having metallic, bendable leads projecting therefrom and resides in the provision of a higher degree of resistance to bending in a short portion of such leads lying in the vicinity of and just outside the point of emergence of said leads from the rigid bodies of said electrical components.

This application is a division of our pending application Serial No. 153,746, filed July 15, 1937, in which this invention is disclosed in conjunction with other matter. The invention of this application is of general applicability to any rigidly formed body acting as, or containing, electrical components from which metallic leads emerge, which leads are intended to be bent. A wide variety of such components are in use and in many of these, upon bending of the leads the deformation thereof is localized and intensified at the point of emergence of said leads from the rigid body, rendering rupture of the leads at that point likely.

In electrical components of relatively large dimensions, protective springs or guides, in addition to the conductors themselves, and exteriorly disposed with respect thereto, effectively distribute bending and prevent intensified local bending at the point of emergence. In other applications, however, and particularly in the case of components intended to be embodied in the circuit of radio receiving apparatus and the like, the elements are entirely too minute to admit of the use of ordinary springs and other lead protection means. Components of the class just referred to must be produced at low cost and the application of conventional springs or guides would be prohibitive on a cost basis, even if the same could be made compact enough for the purpose. In an effort to overcome this difficulty, some have resorted to the expedient of making the lead wires of a stiff, difficultly bent, alloy. This expedient has tended to reduce the trouble from breakage at the point where the lead wire emerges from the rigid body of the component, but has resulted in other unfavorable results. An alloy found to be satisfactory from the standpoint of stiffness has been found to be less receptive of solder than lead wires made of tinned, copper wire. Furthermore, it has been found that the operators in radio assembly plants are hampered by the additional stiffness of such alloy leads in that they must exert more effort to wire the resistors into place for the soldering operation. This is a matter of considerable consequence where an operator wires into place several thousand of such components per day, in which case the stiffness of the leads is not only an annoyance but a definite factor in diminishing the productivity of such operator.

By the application of this invention, bendable leads emerging from a rigid body, are rendered integrally self-protecting against localized bending at the point of emergence, without appreciable effect upon compactness and at inconsequential increase in cost. This is accomplished by cold-working, heat-treating, or enlarging, that part of the lead which is in the near vicinity of and slightly beyond the point of emergence thereof from the rigid body of the electrical component. Because of the additional hardness, stiffness, or resistance to bending of the lead wire at the point where it emerges from the body of the electrical component, the tendency for breakage at this point is eliminated because bending is distributed and localization thereof prevented, while the balance of the lead wire remains soft and easily bendable and may be composed of such metal, tinned, or otherwise, as is most favorable to the reception of solder. When the body of an electrical component of this invention is grasped and the ends of the lead wires are deflected at right angles to the line of emergence thereof, the wires are bent, but they bend in such manner that sharp bends at the point of emergence are eliminated.

The article of manufacture of this invention is best described by reference to the accompanying drawing which is a part hereof and in which

Fig. 1 is a side view, partly in section of a typical electrical component, in this case, a molded resistor, in which leads made in accordance with this invention are shown;

Fig. 2 is a fragmentary view, partly in section of a conventionalized electrical component showing another form of the lead of this invention emerging therefrom;

Fig. 3 is a fragmentary view, partly in section, of a conventionalized electrical component showing still another form of the lead of this invention emerging therefrom;

Fig. 4 is a side view of another form of an electrical component of this invention, parts thereof being shown in section, showing in place a lead of this invention formed by heat treatment of the wire from which the lead was made.

In Fig. 1 of the drawing there is shown, partly in section, a molded composition resistor such as is described in detail in our pending application above referred to. The resistor is composed of a rigid, molded body portion 1 in which there is molded in place leads 2 and 3. Lead 2 is shown in

section and comprises a head portion 4 and a shank portion 5. Lead 2 may be formed from any appropriate metal, preferably ordinary tinned, copper wire. The wire is cut into appropriate lengths and then gripped in an appropriate die and struck with a plunger die to upset the end and form the head 4. The die which grips the wire blank may be slightly enlarged in the vicinity of the end of the wire where the head is to be formed and as a result of the upsetting operation, which forms the head 4, the neck portion 6 of the shank 5 is at the same time upset and slightly enlarged. Following this step, the neck portion 6 may again be reduced to normal diameter, if desired, by passage through mill rolls or the like, to produce the configuration of the leads shown in Fig. 1.

The result of this method of forming leads 2 and 3 is to produce a condition of cold-working in that portion of the lead indicated by the closely-spaced cross-hatching. This cold-working produces a greater degree of hardness, stiffness, and resistance to bending, in the neck portion 6 of the lead, as well as in the head 4. As a result of this, when the resistor body 1 is firmly grasped and the end of a lead pulled sidewise to bend the same, such lead, instead of bending at right angles close to the point of emergence from the body 1, bends in a manner similar to that illustrated in the case of lead 3 on the right hand side of Fig. 1. The cold-worked and stiffened neck portion 6 has caused the bending to be distributed and localization thereof at the point of emergence prevented.

In Figs. 2 and 3 alternate forms of leads of this invention are shown, rigidly held in place in body portions 1 of conventionalized electrical components. In Fig. 2, lead 7 is shown extending from the body portion 1, being composed of a shank portion 8 and a neck portion 9. In this case the entire lead 7 is made of any appropriate metal of uniform hardness throughout. However, neck portion 9 is of enlarged cross-section, tapering off to the normal section of shank portion 8 of the lead. In this instance, the greater section of the neck portion 9 contributes a greater degree of stiffness to the lead at the point of emergence from the rigid body 1 of the electrical component and upon bending of the lead 7 laterally it is deflected in a path similar to that illustrated by the dotted lines in Fig. 2. In this way localized bending at the point of emergence from the rigid body 1 of the electrical component is prevented.

In Fig. 3 lead 10 is shown having a configuration similar in all respects to lead 7 shown in Fig. 2. However, neck portion 12 is shown by the more closely spaced cross-hatching to be of a greater degree of hardness, due to cold-working or the like, than the shank portion 11, thus adding to the increased stiffness at the point of emergence, caused by the enlarged section of the lead.

Shown in Fig. 4, partly in section, is another alternative form of the lead of this invention. The body portion 1, formed of rigid molded material, suitable for use as a radio resistor or the like, has embedded therein electrodes 13 and 14, electrode 13 being shown in section. In this instance electrode 13 is formed of hard-drawn copper or brass wire of substantial stiffness and comprises a shank portion 15 and a neck portion 16, the lead 13 being substantially uniform in cross-section throughout its length. The neck portion 16, including the part of the lead within the body 1 of the resistor, is of the normal, natural hardness and stiffness of hard-drawn wire. The shank portion 15, however, as indicated by the more widely spaced cross-hatching, has been softened by annealing. This may be accomplished by clamping the neck portion 16, which is not to be annealed, in a cold metal block and applying a flame to the shank portion 15 to raise the same to annealing temperature without substantially affecting the temperature of the neck portion 16. The local annealing of shank portion 15 may also be accomplished by clamping that portion of the lead between electrodes and applying electrical heating current thereto, raising the same to annealing temperature. Upon bending a lead thus heat-treated, the curvature of the same will be somewhat similar to that indicated in the case of lead 14 on the right hand side of Fig. 4, localized bending at the point of emergence having been prevented.

It will be noted from the above description that leads formed and held in place in accordance with this invention, because of the additional stiffness at the point where they emerge from the body of the electrical component are relieved of a tendency for breakage at this point, while at the same time the remainder of the lead wire remains soft and can be bent easily and can be of a composition which readily lends itself to soldering. In this way all the benefits of a supporting or guiding means at the point of emergence are integrally obtained directly in the lead itself, providing a maximum compactness and simplicity at a minimum of cost.

While our invention has been described above in connection with specific instances of the best mode of use known to us, it is not intended that the protection of Letters Patent to be granted thereon be unnecessarily limited thereby, but that such protection extend to the full scope of the invention as represented by the claims appended hereto.

What we claim as our invention is:

1. In an electrical component having a bendable solid wire lead, the combination comprising an electrical component body composed of hard nondeformable material, an electrode socket in said hard body, and an elongated easily bent solid current-carrying metallic wire lead having a stiffer less easily bent end portion, said stiffer end portion being embedded and rigidly held within said socket at such depth that a substantial part of said stiffened end portion extends outwardly from and beyond said socket whereby upon bending of said lead localized bending near the point of emergence thereof from said body is diminished.

2. In an electrical component having a bendable solid wire lead, the combination comprising an electrical component body composed of hard nondeformable material, an electrode socket in said hard body, and an elongated easily bent solid current-carrying metallic wire lead having a hardened neck portion, said neck portion being embedded and rigidly held within said socket at such depth that a substantial part of said hardened end portion extends outwardly from and beyond said socket, whereby upon bending of said lead localized bending near the point of emergence thereof from said body is diminished.

3. In an electrical component having a bendable solid wire lead, the combination comprising an electrical component body composed of hard nondeformable material, an electrode socket in said hard body, and an elongated easily bent solid

current-carrying metallic wire lead having an enlarged less easily bent end portion, said enlarged less easily bent end portion being embedded and rigidly held within said socket at such depth that a substantial part of said enlarged end portion extends outwardly from and beyond said socket, whereby upon bending of said lead localized bending near the point of emergence thereof from said body is diminished.

4. In an electrical component having a bendable solid wire lead, the combination comprising an electrical component body composed of hard nondeformable material, an electrode socket in said hard body, and an elongated easily bent solid current-carrying metallic wire lead having a less easily bent enlarged hardened end portion, said enlarged hardened end portion being embedded and rigidly held within said socket at such depth that a substantial part of said enlarged hardened end portion extends outwardly from and beyond said socket, whereby upon bending of said lead localized bending near the point of emergence thereof from said body is diminished.

5. In an electrical component having a bendable solid wire lead, the combination comprising an electrical component body composed of hard nondeformable material, an electrode socket in said hard body, and an elongated easily bent solid current-carrying metallic wire lead having a cold-work hardened end portion, said cold-work hardened end portion being embedded and rigidly held within said socket at such depth that a substantial part of said cold-work hardened end portion extends outwardly from and beyond said socket, whereby upon bending of said lead localized bending near the point of emergence thereof from said body is diminished.

6. In an electrical component having a bendable solid wire lead, the combination comprising an electrical component body composed of hard nondeformable material, an electrode socket in said hard body, and an elongated easily bent solid current-carrying metallic wire lead having at one end a stiffer less easily bent neck portion terminating in an enlarged nondeformable head, said head being embedded and rigidly held in said electrode socket at such depth that said stiffer neck portion extends outwardly beyond said socket, whereby upon bending of said lead localized bending thereof near the junction of the same with said hard body is materially reduced.

GEORGE E. MEGOW.
HOMER G. THOMSON.