PCT

WORLD INTELLECTUAL PROPERTY ORGANIZATION
International Bureau

INTERNATIONAL APPLICATION PUBLISHED UNDER THE PATENT COOPERATION TREATY (PCT)

(51) International Patent Classification 6 : D04H 1/54, 1/42

A1

(11) International Publication Number: WO 96/11293

(43) International Publication Date: 18 April 1996 (18.04.96)

(21) International Application Number: PCT/GB95/02337

(22) International Filing Date: 3 October 1995 (03.10.95)

(30) Priority Data:
9420156.3 6 October 1994 (06.10.94) GB

(71) Applicant *(for all designated States except ES US)*: BRITISH UNITED SHOE MACHINERY LIMITED [GB/GB]; P.O. Box 88, Ross Walk, Belgrave, Leicester LE4 5BX (GB).

(71) Applicant *(for ES only)*: USM ESPANA S.L. [ES/ES]; Apartado 3174, Berenguer de Palou, E-08027 Barcelona (ES).

(72) Inventor; and
(75) Inventor/Applicant *(for US only)*: GREATOREX, Anthony, Thomas [GB/GB]; Rutland House, 1068 Melton Road, Syston, Leicester LE7 2NN (GB).

(74) Agents: PARNHAM, Kevin et al.; USM Texon Limited, P.O. Box 88, Ross Walk, Belgrave, Leicester LE4 5BX (GB).

(81) Designated States: AM, AT, AU, BB, BG, BR, BY, CA, CH, CN, CZ, DE, DK, EE, ES, FI, GB, GE, HU, IS, JP, KE, KG, KP, KR, KZ, LK, LR, LT, LU, LV, MD, MG, MN, MW, MX, NO, NZ, PL, PT, RO, RU, SD, SE, SG, SI, SK, TJ, TM, TT, UA, UG, US, UZ, VN, European patent (AT, BE, CH, DE, DK, ES, FR, GB, GR, IE, IT, LU, MC, NL, PT, SE).

Published
With international search report.
Before the expiration of the time limit for amending the claims and to be republished in the event of the receipt of amendments.

(54) Title: NON-WOVEN FIBRE FABRIC AND METHOD OF MAKING THE FABRIC

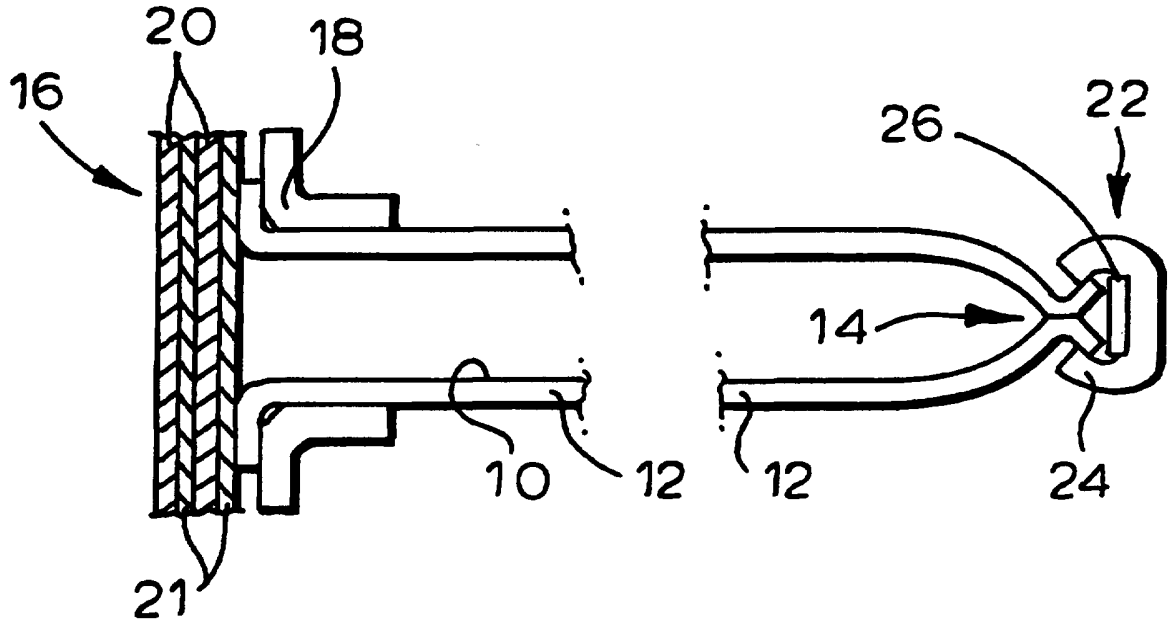

(57) Abstract

Non-woven fibre fabrics are described, suitable for use in self-supporting dust filter units having at least one passage (10) defined by wall portions (12) made from air permeable fibre fabric through which wall portions (12) air can pass and be drawn off along the passage (10) but which prevent the passage therethrough of dust and/or other debris carried by the air. The non-woven fabrics are blends of high temperature resistant fibres. A preferred blend consists of 50 % by weight polyimide fibres and 50 % by weight aramid fibres, but may include glass fibres, polytetrafluoroethylene fibres, or others and may optionally include an amount of heat activated fibres having a relatively high melting point for example, polyphenylene sulphide fibres.

FOR THE PURPOSES OF INFORMATION ONLY

Codes used to identify States party to the PCT on the front pages of pamphlets publishing international applications under the PCT.

AT	Austria	**GB**	United Kingdom	**MR**	Mauritania
AU	Australia	**GE**	Georgia	**MW**	Malawi
BB	Barbados	**GN**	Guinea	**NE**	Niger
BE	Belgium	**GR**	Greece	**NL**	Netherlands
BF	Burkina Faso	**HU**	Hungary	**NO**	Norway
BG	Bulgaria	**IE**	Ireland	**NZ**	New Zealand
BJ	Benin	**IT**	Italy	**PL**	Poland
BR	Brazil	**JP**	Japan	**PT**	Portugal
BY	Belarus	**KE**	Kenya	**RO**	Romania
CA	Canada	**KG**	Kyrgystan	**RU**	Russian Federation
CF	Central African Republic	**KP**	Democratic People's Republic of Korea	**SD**	Sudan
CG	Congo			**SE**	Sweden
CH	Switzerland	**KR**	Republic of Korea	**SI**	Slovenia
CI	Côte d'Ivoire	**KZ**	Kazakhstan	**SK**	Slovakia
CM	Cameroon	**LI**	Liechtenstein	**SN**	Senegal
CN	China	**LK**	Sri Lanka	**TD**	Chad
CS	Czechoslovakia	**LU**	Luxembourg	**TG**	Togo
CZ	Czech Republic	**LV**	Latvia	**TJ**	Tajikistan
DE	Germany	**MC**	Monaco	**TT**	Trinidad and Tobago
DK	Denmark	**MD**	Republic of Moldova	**UA**	Ukraine
ES	Spain	**MG**	Madagascar	**US**	United States of America
FI	Finland	**ML**	Mali	**UZ**	Uzbekistan
FR	France	**MN**	Mongolia	**VN**	Viet Nam
GA	Gabon				

NON-WOVEN FIBRE FABRIC AND METHOD OF MAKING THE FABRIC

This invention is concerned with non-woven fibre fabric and a method of making the same, and is especially concerned with non-woven fibre fabrics suitable for use in self-supporting filter units for filtering a fluid, for example air.

Our co-pending European Patent Applications Nos EP 0,515,045-A1 and EP 0,549,050-A1 are both concerned with such filter units. Each filter unit having at least one passage, and preferably a plurality of passages, defined by fluid permeable wall portions of non-woven fibre fabric, through which the fluid to be filtered can pass and be drawn off along the passage or passages but which prevent the passage of particulate material and/or other debris carried by the fluid. The two European patent applications referred to above describe self-supporting units which are particularly suitable for filtering air in dust filters but may be used for filtering other fluid materials. Our co-pending UK Patent Application No 9416052.0, filed on 9 August 1994 is also concerned with self-supporting filter units.

In our co-pending patent applications, there are described examples of filter units capable of operating at a relatively high continuous temperature of, for example up to 260°C and maximum temperatures of up to 300°C for a temporary period. Such high temperature filter units have utilised a non-woven fibre fabric consisting of staple polyimide fibres to provide wall portions of filter units, through which the air to be filtered passes. In the manufacture of these filter units, the polyimide fibre fabric is heated to a temperature in the region of the glass transition temperature of the fibre which causes the

fibres to shrink and become relatively rigid, after the fabric has been allowed to cool. This rigidity ensures that the wall portions of the filter units are relatively rigid and thus, self-supporting when the filter units are held by a mounting portion at one end of the unit with the filtration passages extending horizontally, or substantially so.

In the manufacture of the fabric of polyimide fibres, known techniques for producing non-woven fibre fabric from staple fibres are used including needling techniques to consolidate the fibres and to entangle the fibres to some extend to provide some strength to the fabric.

Whilst the filtration fabrics made of polyimide staple fibres have been found to perform very satisfactorily at high temperatures, very careful control of the temperature to which the fabric is heated during manufacture of the filter units is required.

This is because it has been found that if the fabric is heated to too high a temperature, the shrinkage of the fibres can be so great that the fabric tends to tear; furthermore, excessive shrinkage tends to emphasise any non-uniformity in the fibre mat which may arise, for example at the point where needles have penetrated the fabric during manufacture; any non-uniformities which are emphasised tend to detract from the otherwise relatively smooth surface and provide a surface which is somewhat lumpy in appearance. This is especially undesirable for self-cleaning air filters where it is desirable that the surface of the filtration fabric should be as smooth as possible to ensure ready release of dust when cleaning the filter. On the other hand, restricting the temperature to which fabric is heated during manufacture of the filter

units tends to result in units which are less rigid than would be the case were a higher manufacturing temperature to be used and having somewhat lower strength.

It has now been found, surprisingly, that the use of a non-woven fibre fabric comprising a blend of polyimide fibres as a first component with a second component consisting of fibres which are generally dimensionally stable, that is do not shrink or soften, or melt at temperatures to which the fabric is normally exposed in manufacture, enables the fabric to be heated to a somewhat higher temperature to provide increased rigidity and strength whilst militating against tearing of the fabric and providing a smoother surface to the filtration units.

References made herein to fibres which are dimensionally stable or fibres which do not shrink are to be understood as denoting fibres in which no substantial shrinkage, for example less than 5% shrinkage and preferably less than 1% shrinkage, occurs at temperatures to which the fibres are heated. In addition, dimensionally stable fibres do not expand significantly at these temperatures.

It has also been found that increased rigidity of a filtration fabric comprising polyimide fibre can be achieved by utilising a blend of polyimide fibre as a first fibre component and a second fibre component which melts at a temperature above 270°C but below the glass transition temperature of the polyimide fibre, for example, polyphenylene sulphide fibres. It has been found that using blends of polyimide fibres and polyphenylene sulphide fibres the temperature to which the fabric must be heated in manufacture of filter units to achieve a certain rigidity is less than the temperature required to provide

the same rigidity in a fabric consisting of only polyimide fibres provided that the temperature to which the fabric is heated during manufacture is sufficient to soften the polyphenylene sulphide fibres. The tendency to tear appears to be significantly reduced and the surface of the filter fabric is relatively smooth.

In some cases, satisfactory filter units may be made by using, instead of polyimide fibres, other first fibre components blended with a polyphenylene sulphide second fibre component, for example, first fibre components may include aramid, glass, polyetheretherketone (PEEK), or polytetrafluoroethylene fibres which are dimensionally stable and do not change phase at temperature between 300°C and room temperature. However, with these other first fibre components, there is little or no shrinkage of the first fibre components when heated to soften and melt the polyphenylene sulphide component, so the contribution to rigidity made by the shrinkage of the polyimide fibre is not present in these cases. The particular first fibre components to be used are selected according to the ambient conditions, for example temperature, acidity, alkalinity, to which they are expected to be exposed in use so that the fabric is not adversely affected to any substantial extent.

In our aforementioned European Patent Application No EP 0,549,105-A1 and the aforementioned UK patent application, a mounting portion of a filter unit is provided by a flange which is formed integral with the wall portions of the filter unit with reinforcing portions of material secured to outwardly flanged parts of the walled portions. Because of the shrinkage of polyimide fibres at manufacturing temperatures of the filter units, it is difficult to control the shrinkage of the reinforcing portions if polyimide fibres are used in the reinforcing

layers and securing polyimide reinforcing layers to the body of a filter unit can be difficult.

Accordingly, the reinforcing portion may suitably comprise a non-woven fibre fabric comprising a blend of fibres consisting of a first fibre component which is dimensionally stable between room temperature and the temperature to which the filter unit is heated during manufacture or use and a second fibre component which softens and holds the first fibres in place after heating the fabric during manufacture of a filter unit and then allowing it to cool.

This invention may be considered to provide, in one aspect, a non-woven fibre fabric comprising a blend of polyimide fibres as a first component and a second component consisting of fibres which do not shrink or soften at temperatures to which the fabric is normally exposed in manufacture or in use.

Preferably in a fabric as set out in the last preceding paragraph the second component comprises aramid fibres; however, other fibres having the desired property may be used for example, glass, polyetheretherketone or polytetrafluoroethylene fibres or mixtures of any suitable fibres.

Conveniently, in a fabric as set out in the last preceding paragraph but one, the polyimide fibres are present in amounts of between 40% and 80% by weight based on the weight of the fabric.

If desired, a fabric as set out in the last preceding paragraph but two may also comprise a heat-activated component which may be introduced into the fibre batt from

which the fabric is formed as a third fibre component, which softens under the influence of heat, the heat-activated component being present in an amount sufficient to hold the fibres of the fabric without substantially blocking passages between the fibres when heated to a temperature reached during the manufacture of filter units. Suitably the heat-activated component, for example polyphenylene sulphide, may be present in an amount of up to 40% by weight based on the weight of the fabric.

In another aspect, the invention may be considered to provide a non-woven fibre fabric comprising a first fibre component which is dimensionally stable and does not melt between a temperature of 300°C and room temperature and a second component which melts at a temperature above 270°C but below the temperature at which the first fibre component ceases to be dimensionally stable or melts.

Preferably, the first fibre component of a fabric as set out in the last preceding paragraph is polyimide, however, aramid, glass, polyetheretherketone or polytetrafluoroethylene, or blends of any of these fibres may also be used.

In a fabric as set out in the last preceding paragraph but one the second component is preferably polyphenylene sulphide which is suitably introduced into the fabric as a second fibre component; however, where the first fibre component consists of fibres, for example glass, having a sufficiently high melting point, the second component may be polyetheretherketone.

In a fabric in accordance with the last preceding paragraph but two the first fibre component is suitably present in an amount of between 50% and 90% by weight based

on the weight of the fabric.

In yet another aspect, the invention may be considered to provide a method of making a non-woven fibre fabric comprising procuring a blend of first and second fibre components and forming the fibre blend into a non-woven fibre batt, and subjecting the batt to heat wherein the first fibre component consists of polyimide fibres and the heat to which the batt is subjected is sufficient to raise the temperature such that the polyimide fibres are caused to shrink but not sufficient to cause the fibres of the second component to shrink, expand, soften or degrade to any substantial extent.

In carrying out a method as set out in the last preceding paragraph, the temperature to which the batt is heated may be about the glass transition temperature of the first fibre component.

In carrying out a method as set out in the last preceding paragraph but one, the batt may also include a third fibre component, the third component being heat activable at the temperature to which the batt is heated, whereby to hold the first and second fibre components without substantially blocking the passages between the fibres.

In yet another aspect, the invention may be considered to provide a method of making a non-woven fabric comprising procuring a blend of first and second fibre components, forming the fibre blend into a non-woven fibre batt and subjecting the batt to heat, wherein the first fibre component is substantially dimensionally stable and does not melt between a temperature of 300°C and room temperature and wherein the second fibre component softens

at a temperature above 270°C but below the temperature at which the first component ceases to be dimensionally stable or melts and wherein the batt is heated to a temperature between the softening temperature of the second component and the temperature at which the first component ceases to be dimensionally stable or melts, whereby to provide a fabric which is stable at temperatures up to the softening point of the second component.

A fabric in accordance with the invention is preferably made by a method in accordance with the invention.

In yet another aspect, the invention may be considered to provide a self-supporting filter unit having at least one passage defined by wall portions made from air-permeable fibre fabric, through which wall portions air can pass and be drawn off along the passage but which prevent the passage therethrough of dust and/or other debris carried by such air, in which the passage is closed off at one end portion and at the other end portion there is formed integral with said wall portions a rigid mounting portion into which the passage opens whereby the filter unit can be supported as part of a filter assembly wherein the air permeable fabric is a fabric in accordance with the invention.

There now follows a detailed description to be read with reference to the accompanying drawing of non-woven fibre fabrics and methods of making the same, together with a filter unit in which the fabrics are utilised, embodying the invention. It will be realised that these fabrics methods and filter unit have been selected for description to illustrate the invention by way of example only.

In the accompanying drawing, Figure 1 is a diagrammatic sectional view of a self-supporting filter unit embodying the invention.

The illustrative filter unit is generally similar in construction to that described in our aforementioned co-pending European Patent Application No EP-0,515,045-A1 and is of detailed construction similar to that described in the above mentioned UK patent application.

The illustrative filter unit has a plurality of passages (10) defined by wall portions (12) made from air permeable non-woven fibre fabric through which wall portions (12) air can pass and be drawn off along the passages (10) but which prevent the passage therethrough of particulate material eg dust, and/or other debris carried by such air. The passages (10) are closed off at one end portion by securing together extremities (14) of the fabric. At the other, open end portion there is formed integral with the wall portions (12) a rigid mounting portion (generally designated 16) into which the passages (10) open whereby the illustrative filter unit can be supported as part of a filter assembly.

The mounting portion (16) comprises a first reinforcing portion (18) of non-woven fibre fabric material which extends around and is secured to the fabric of the wall portions (12), parts of the first reinforcing portion (18) and of the fabric of the wall portion being outwardly flanged. The mounting portion further comprises a second reinforcing portion (20,21) of non-woven fibre fabric material positioned over the outwardly flanged portions, in alignment therewith, and secured thereto, the second reinforcing portion (20,21) having one or more apertures (not shown) therein. Adjacent said closed one end of the

passages (10) a strengthening portion, (generally designated 22) is provided by forming parts of the wall portions, including the extremities (14).

This strengthening portion (22) comprises fabric of the wall portions (12) including the extremities (14) and a third reinforcing portion (24) which is wrapped around the extremities (14) of the wall portion and secured thereto by means of a bonding material (26). The second reinforcing portion (20,21) comprises a first reinforcing layer (20) and a second layer (21) by which the first layer is bonded to the outwardly flanged portion but which may itself comprise an amount of reinforcing fibre as well as a bonding agent, if desired.

The illustrative filter unit is manufactured generally as described in our aforementioned UK patent application by a method which involves forming a fluid permeable fibre fabric to provide the walls portions (12) and forming the mounting portion (16) at the open end of the filter unit. Two layers of needled fibre batt are sewn to provide the general filter shape, including defining passages (10). The passages (10) have formers inserted into them with a shape corresponding to the cross-sectional shape to be imparted to the passages. Parts of the fabric of the wall portions (12) project and are outwardly flanged in carrying out the manufacturing process, after a strip of suitable fabric has been positioned around the wall portions. Fabric layers to provide the reinforcing portion (20,21) are appropriately positioned as are fabrics to provide the third reinforcing portion (24) and the bonding material (26). The whole is then subjected to heat and, if desired, pressure, to activate the various heat activatible components.

Various non-woven fibre fabrics which may provide filter units embodying the invention and which themselves embody the invention in its fabric aspects are described hereinafter in Examples I-IV, which also describe the treatment of a fibre batt to provide a filter unit of the type shown in Figure 1, using the manufacturing process outlined above and described in more detail in our co-pending UK patent application.

Example I

A non-woven fibre batt is formed which comprises a blend of polyimide fibres and aramid fibres, the blend comprising 50% by weight of each type of fibre. The fibres are formed into a blend by known fibre blending technique and laid to form a non-woven fibre mat which is subjected to a needling operation, in generally known manner to consolidate the mat and provide a non-woven fibre batt.

The non-woven fibre batt is cut to provide appropriate pieces which are assembled and subjected to heat and pressure as described above to form a filter unit; care must, of course, be taken not to subject the wall portions to undue pressure, to avoid unwanted consolidation (which might block the passages between the fibres).

In Example I, the polyimide fibres are copolyimide fibres having a glass transition temperature of 315°C supplied under the designation P84 by Lenzing AG. The aramid fibres are Nomex fibres. Nomex is heat resistant and has good dimensional stability at relatively high temperatures. Nomex does not melt but degrades rapidly at temperatures above 370°C. It is suitable for use at continuous temperatures up to a above 260°C.

In the manufacture of filter units in accordance with

the invention, the fibre batt consisting of the blend of polyimide and aramid fibres above, is subjected to heat sufficient to cause shrinkage of the polyimide fibres and to render them more rigid, the batt being heated to a temperature of the order of 300°C; the mounting and strengthening portions (16,22) also are subjected to pressure to consolidate them sufficiently. The filter unit fabric so formed is found to be rigid and self-supporting when the unit is supported by its mounting portion (16) with the passages (10) extending in a horizontal direction. This illustrative fabric showed no tendency to tear during the manufacturing process, in comparison with previous experience with non-woven fabrics in which the fibres of the fabric of the wall portions (12) are only P84 polyimide fibres. Furthermore, the surfaces of the fabric appear to be somewhat smoother than fabrics made only of the P84 copolyimide, treated to the same temperature and are therefore expected to be more suitable for use in self-cleaning filter units. The fabric has an area weight of about 500 grams per square metre.

Example II

A non-woven fibre batt is formed by known fibre blending and consolidating techniques including a needling operation using a blend of three fibre components. The first fibre component is P84 copolyimide staple fibre referred to above present in amount of 50% by weight based on the weight of the fabric, the second fibre component is Nomex aramid fibre present in amount of 40% by weight of the fabric and the third component is a polyphenylene sulphide fibre supplied under the trade name Ryton. These polyphenylene sulphide fibres have a melting point of about 285°C and are manufactured by Philips Fibers Corporation and available from them. In making a filter unit of the type shown in Figure 1 from the fibre blend of Example II,

the fibre batt must be subjected to a temperature in excess of 285°C but below 300°C, in order to melt the Ryton fibres to heat activate them and to cause some shrinkage of the P84 fibres. However, the temperature is not so high as the first example, thus the shrinkage of the P84 fibres is not too severe and there is an even smaller risk of the fabric tearing, together with improved surface finish. The presence of the Ryton fibres may lead to an even smoother surface to the finished fabric in the filter, thus improving the self-cleaning ability in the use of the filter.

Example III

The fibre blend of the fabric described in this example also comprises first, second and third fibre components which are the same as those in Example II but present in different proportions, namely equal parts of each component. This third illustrative fabric also performs satisfactorily in the filter unit of the type described above, with good self-cleaning properties.

Example IV

This is an example of a filter fabric which does not include any polyimide fibres and comprises a blend of 80% by weight Nomex aramid fibres, and 20% by weight Ryton fibres. The filter fabric so formed is found to perform satisfactorily as the wall portions (12) of the filter units as shown in Figure 1 but the unit being intended to run at continuous temperatures somewhat lower than for Examples I, II and III.

Instead of the Ryton polyphenylene sulphide fibres used in the examples it may be possible to utilise Fortron polyphenylene sulphide fibres supplied by Hoechst Celanese Corporation of Charlotte, North Carolina, USA; Fortron

fibres have a melting point of about 282°C and low shrinkage of less than 1% when subjected to hot air at a temperature of 204°C for one hour.

Instead of Nomex aramid fibres referred to, it may be possible to use Zyex polyetheretherketone supplied by Zyex Ltd of Stonedale Road, Oldends Lane Industrial Estate, Stonehouse, Gloucestershire GL10 3RQ. Zyex fibres have a melting point of about 335°C and low shrinkage of about 1% at a temperature of 180°C. Zyex fibres have good resistance to chemical attack and exposure to steam.

In manufacturing the filter unit shown in Figure 1 utilising the fabric described in Example I for the wall portion, the first reinforcing layers (20) and the first reinforcing portion (18) are suitable non-woven fibre fabrics having weight of 300 grams per square metre and comprising a blend of 66% by weight Nomex fibres and 34% by weight Ryton fibres. The second layers (21) and the bonding material (26) are non-woven fibre fabrics having a weight of 300 grams per square metre and consisting of a fibre blend of 80% by weight Ryton fibres and 20% by weight Nomex fibres and third reinforcing portion (24) is a non-woven fibre fabric consisting only of P84 polyimide fibres. However, it will be appreciated that many other blends of fibre materials may be used in the mounting portion (16) and strengthening portion (22) of filter units embodying the invention provided that the reinforcing characteristics are adequate and that the various layers are sufficiently securely bonded to one another, especially in the mounting portion, to effectively provide a mounting portion which is integral with the fabric of the wall portions (12).

It will be appreciated that the drawing of Figure 1 is diagrammatic and that when the manufacture of the filter

unit is finished, the strengthening portion (22) will have a substantially T configuration with the third reinforcing portion being entirely wrapped around the outwardly flared extremities (14) of the wall portions (12) and bonded thereto by the bonding material (26).

Claims:

1. A non-woven fibre fabric suitable for use in a filter unit comprising a blend of polyimide fibres as a first component and a second component consisting of fibres which do not shrink or soften at temperatures to which the fabric is normally exposed in manufacture or in use.

2. A fabric according to Claim 1 wherein the second component comprises aramid fibres.

3. A fabric according to either one of Claims 1 and 2 wherein the polyimide fibres are present in an amount of between 40% and 80% by weight based on the weight of the fabric.

4. A fabric according to any one of the preceding Claims further comprising a heat-activated component which softens under the influence of heat present in an amount sufficient to hold the fibres of the fabric without substantially blocking passages between fibres of the fabric.

5. A fabric according to Claim 4 wherein the heat-activated component is present in an amount of up to 40% by weight based on the weight of the fabric.

6. A non-woven fibre fabric comprising a first fibre component which is dimensionally stable and does not melt between a temperature of 300°C and room temperature and a second component which melts at a temperature above 270°C but below the temperature at which the first fibre component ceases to be dimensionally stable or melts.

7. A fabric according to Claim 6 wherein the first fibre component is selected from polyimide, aramid, glass,

polyetheretherketone and polytetrafluoroethylene, or blends thereof.

8. A fabric according to either one of Claims 6 and 7 wherein the second component is polyphenylene sulphide.

9. A fabric according to either one of Claims 6 to 8 wherein the first fibre component is present in an amount of between 50% and 90% by weight based on the weight of the fabric.

10. A self-supporting filter unit having at least one passage defined by wall portions made from air-permeable fibre fabric, through which wall portions air can pass and be drawn off along the passage but which prevent the passage therethrough of dust and/or other debris carried by such air, in which the passage is closed off at one end portion and at the other end portion there is formed integral with said wall portions a rigid mounting portion into which the passage opens whereby the filter unit can be supported as part of a filter assembly wherein the air permeable fabric is a fabric according to any one of Claims 1 to 9.

1/1

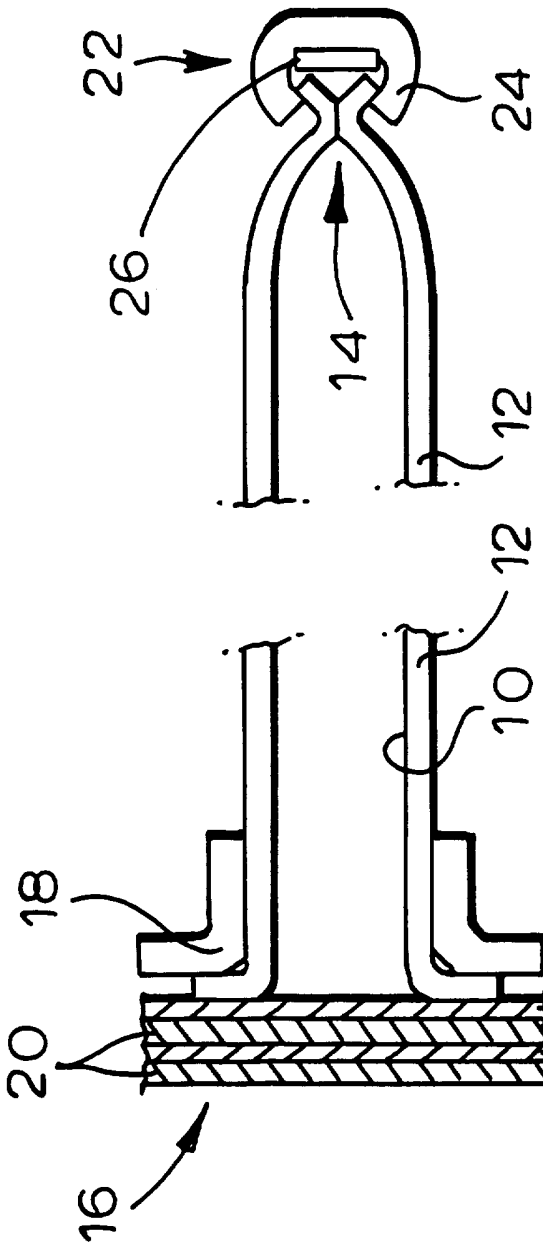

FIG.1

INTERNATIONAL SEARCH REPORT

Inter nal Application No
PCT/GB 95/02337

A. CLASSIFICATION OF SUBJECT MATTER
IPC 6 D04H1/54 D04H1/42

According to International Patent Classification (IPC) or to both national classification and IPC

B. FIELDS SEARCHED

Minimum documentation searched (classification system followed by classification symbols)
IPC 6 D04H

Documentation searched other than minimum documentation to the extent that such documents are included in the fields searched

Electronic data base consulted during the international search (name of data base and, where practical, search terms used)

C. DOCUMENTS CONSIDERED TO BE RELEVANT

Category *	Citation of document, with indication, where appropriate, of the relevant passages	Relevant to claim No.
X	WO,A,94 22552 (USM ESPANA SA ;BRITISH UNITED SHOE MACHINERY (GB); GREATOREX ANTHO) 13 October 1994	1
A	see page 1, line 3 - page 6, line 4	6-8,10
A	EP,A,0 515 045 (BRITISH UNITED SHOE MACHINERY ;USM ESPANA SA (ES)) 25 November 1992 cited in the application see whole document	1,10
A	EP,A,0 337 597 (ALBANY RESEARCH UK) 18 October 1989 see page 2, line 22 - page 5, line 33	1

☐ Further documents are listed in the continuation of box C.

☒ Patent family members are listed in annex.

* Special categories of cited documents :

"A" document defining the general state of the art which is not considered to be of particular relevance

"E" earlier document but published on or after the international filing date

"L" document which may throw doubts on priority claim(s) or which is cited to establish the publication date of another citation or other special reason (as specified)

"O" document referring to an oral disclosure, use, exhibition or other means

"P" document published prior to the international filing date but later than the priority date claimed

"T" later document published after the international filing date or priority date and not in conflict with the application but cited to understand the principle or theory underlying the invention

"X" document of particular relevance; the claimed invention cannot be considered novel or cannot be considered to involve an inventive step when the document is taken alone

"Y" document of particular relevance; the claimed invention cannot be considered to involve an inventive step when the document is combined with one or more other such documents, such combination being obvious to a person skilled in the art.

"&" document member of the same patent family

Date of the actual completion of the international search	Date of mailing of the international search report
30 January 1996	19. 02. 96
Name and mailing address of the ISA European Patent Office, P.B. 5818 Patentlaan 2 NL - 2280 HV Rijswijk Tel. (+ 31-70) 340-2040, Tx. 31 651 epo nl, Fax (+ 31-70) 340-3016	Authorized officer V Beurden-Hopkins, S

Form PCT/ISA/210 (second sheet) (July 1992)

INTERNATIONAL SEARCH REPORT

Inter ›nal Application No
PCT/GB 95/02337

Patent document cited in search report	Publication date	Patent family member(s)		Publication date
WO-A-9422552	13-10-94	EP-A-	0690741	10-01-96
EP-A-0515045	25-11-92	JP-A-	5261231	12-10-93
		US-A-	5246474	21-09-93
EP-A-0337597	18-10-89	AU-B-	616243	24-10-91
		AU-B-	3074989	19-10-89
		BE-A-	1002706	14-05-91
		CA-A-	1321064	10-08-93
		CH-A-	684726	15-12-94
		FR-A-	2630135	20-10-89
		GB-A,B	2217355	25-10-89
		GR-B-	1000276	12-05-92
		JP-A-	1282374	14-11-89
		PT-B-	89825	01-03-95
		US-A-	5229184	20-07-93