US00D844179S

(12) **United States Design Patent** (10) **Patent No.: US D844,179 S**
Sailer (45) **Date of Patent: ** Mar. 26, 2019**

(54) **STEP UNIT**

(71) Applicant: **Glenn Sailer**, Escondido, CA (US)

(72) Inventor: **Glenn Sailer**, Escondido, CA (US)

(**) Term: **15 Years**

(21) Appl. No.: **29/639,994**

(22) Filed: **Mar. 10, 2018**

Related U.S. Application Data

(63) Continuation-in-part of application No. 29/625,317, filed on Nov. 8, 2017, now Pat. No. Des. 828,931, which is a continuation-in-part of application No. 29/596,114, filed on Mar. 6, 2017, now Pat. No. Des. 805,658, which is a continuation of application No. 15/263,128, filed on Sep. 12, 2016, now abandoned, which is a continuation-in-part of application No. 14/811,713, filed on Jul. 28, 2015, now abandoned.

(51) **LOC (11) Cl.** **25-04**

(52) **U.S. Cl.**
USPC **D25/69**

(58) **Field of Classification Search**
USPC D25/62–69; 182/120, 156, 40, 180.1, 182/202, 201, 204, 228.1, 229.2, 228.6, 182/100, 152, 189, 92, 87, 90; 248/210, 248/218.4
CPC ... E06C 1/387; E06C 7/00; E06C 7/50; E06C 7/081; E06C 7/084
See application file for complete search history.

(56) **References Cited**

U.S. PATENT DOCUMENTS

3,399,746 A * 9/1968 Wood E06C 9/04 182/100
4,449,612 A * 5/1984 Southard A63B 27/00 108/152

(Continued)

OTHER PUBLICATIONS

StepBoltInst.DOC (REV. Feb. 10, 2015) P/N 230311, Buckingham Mfg. Co. Inc., Warnings/Instructions, Step Bolt with Anchor (part No. 3058 & 3075).

(Continued)

Primary Examiner — Cynthia Ramirez
Assistant Examiner — Gino Colan
(74) *Attorney, Agent, or Firm* — LambentIP

(57) **CLAIM**

The ornamental design for a step unit, as shown and described.

DESCRIPTION

FIG. **1** is a perspective view of a step unit, in an assembled configuration, showing my design.
FIG. **2** is an exploded perspective view thereof.
FIG. **3** is a right side elevational view thereof.
FIG. **4** is a top plan view thereof.
FIG. **5** is a perspective view of a step member of the step unit.
FIG. **6** is a right side elevational view thereof.
FIG. **7** is a front elevational view thereof.
FIG. **8** is a rear elevational view thereof.
FIG. **9** is a top plan view thereof.
FIG. **10** is a bottom plan view thereof.
FIG. **11** is a perspective view of a rod member of the step unit.
FIG. **12** is a right side elevation view thereof.
FIG. **13** is a top plan view thereof.
FIG. **14** is a bottom plan view thereof.
FIG. **15** is a front elevation view thereof; and,
FIG. **16** is a rear elevational view thereof.
Members of the step unit are shown separately in FIGS. **5-16** for clarity of illustration. The broken lines shown in FIGS. **3** and **4** are for the purpose of illustrating environment and form no part of the claimed design.

1 Claim, 7 Drawing Sheets

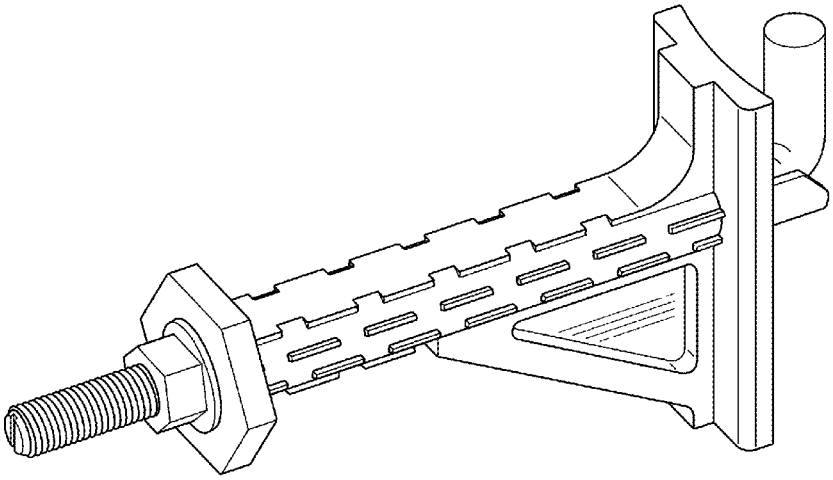

(56) **References Cited**

U.S. PATENT DOCUMENTS

4,932,497	A *	6/1990	Raso	A63B 27/00 182/189
5,544,717	A	8/1996	White et al.	
5,941,485	A	8/1999	Davidson et al.	
D429,002	S *	8/2000	Takahashi	D25/69
D429,003	S *	8/2000	Takahashi	D25/69
6,378,822	B1	4/2002	Franks	
6,595,323	B2	7/2003	Lindsey et al.	
D631,981	S *	2/2011	Henry	D25/69
D655,597	S	3/2012	Matzek et al.	
8,387,752	B2	3/2013	Lagerstedt	
9,409,055	B1 *	8/2016	Niemela	A63B 27/00
2002/0066620	A1 *	6/2002	Lindsey	E06C 1/34 182/92
2005/0040303	A1	2/2005	Diggle et al.	
2009/0045012	A1 *	2/2009	Mencl	A63B 27/00 182/92

OTHER PUBLICATIONS

SP421 REV.D, Permanent D-Bolt Anchorage Connectors, Models: 415, 416, 416SS, 417, 417SS, 418, 418SS, 419, 419SS, Miller by Honeywell.

* cited by examiner

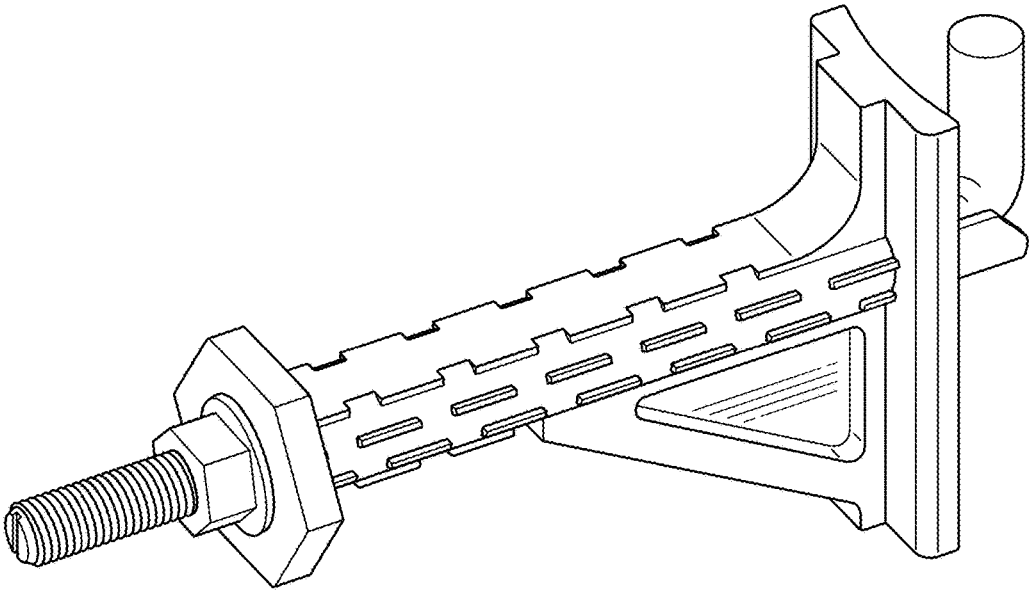

FIG. 1

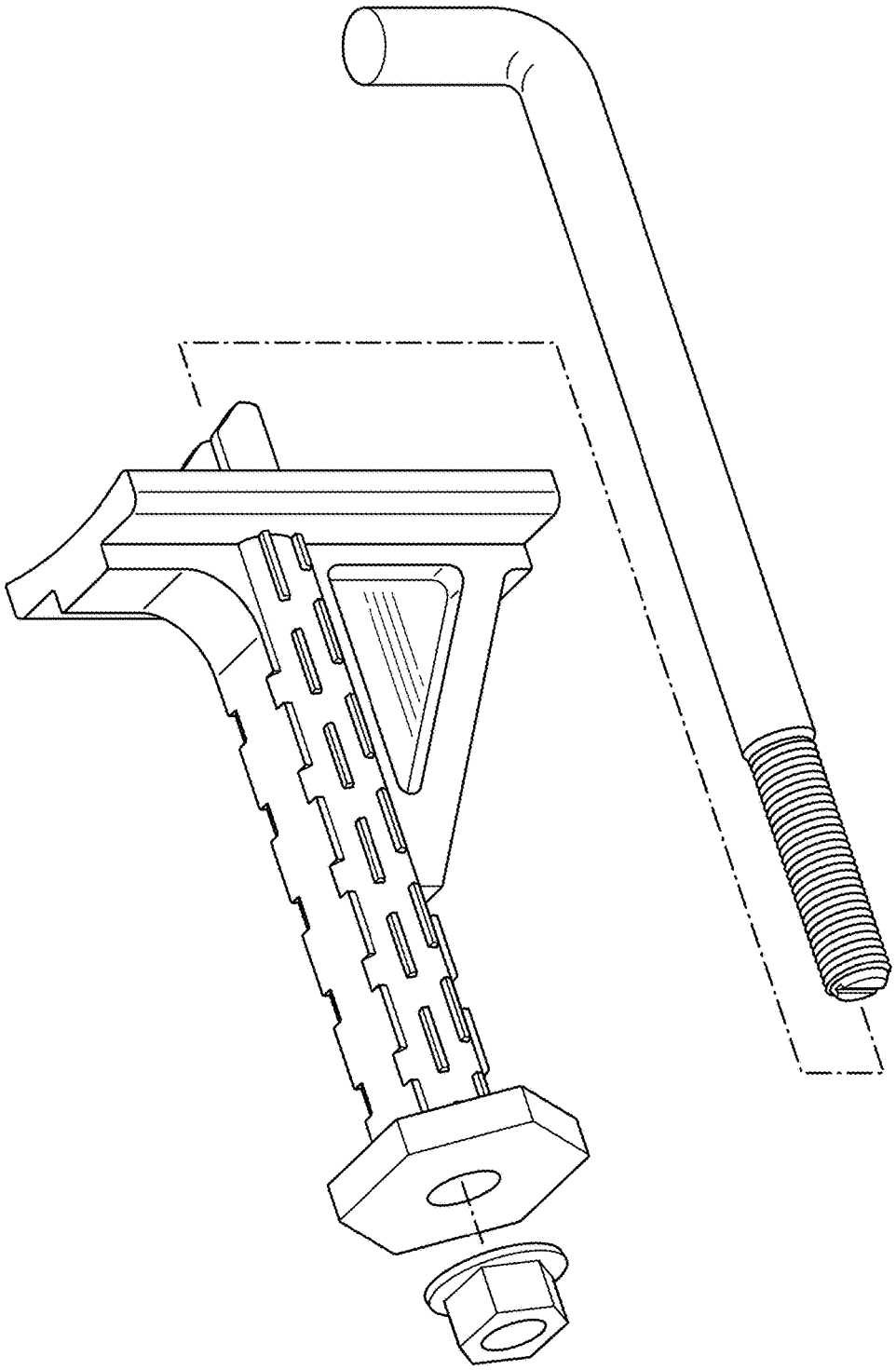

FIG. 2

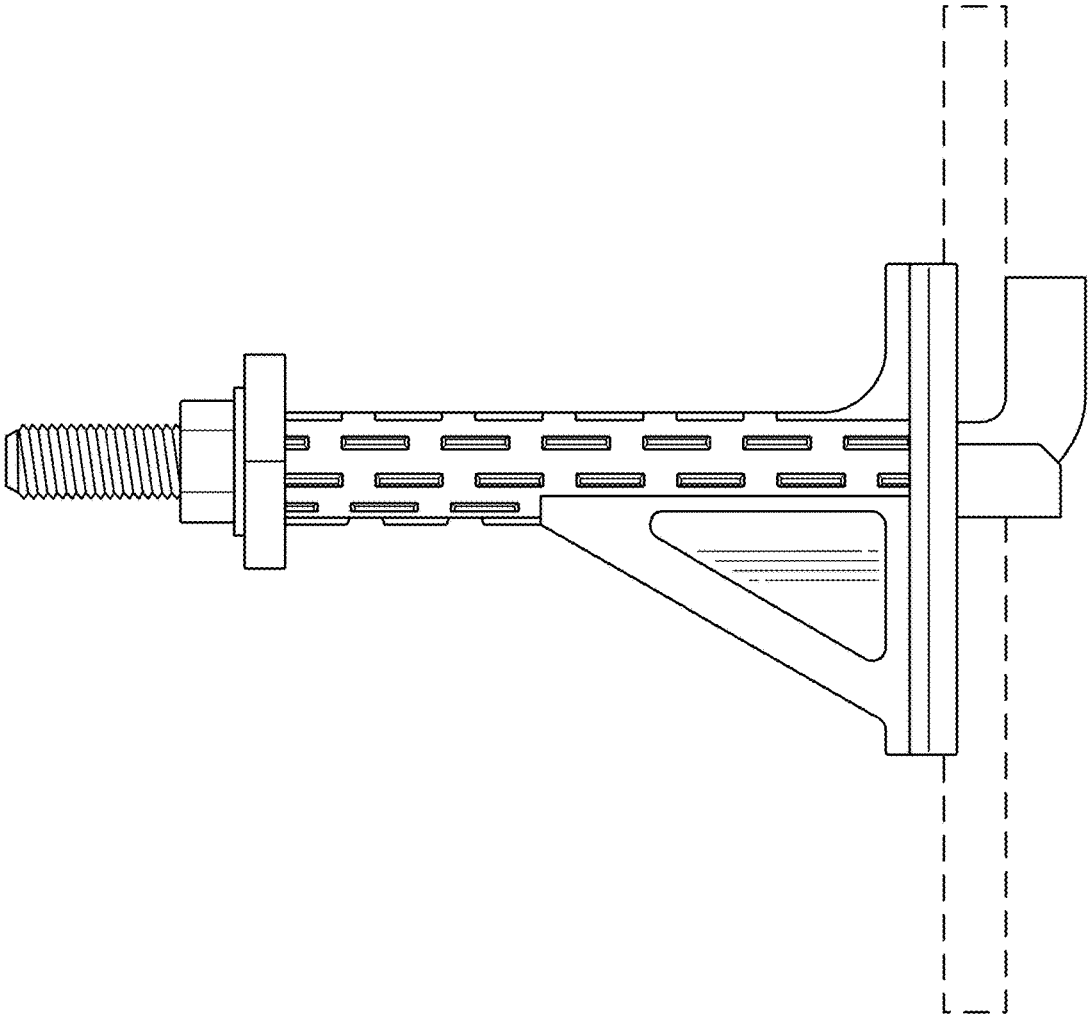

FIG. 3

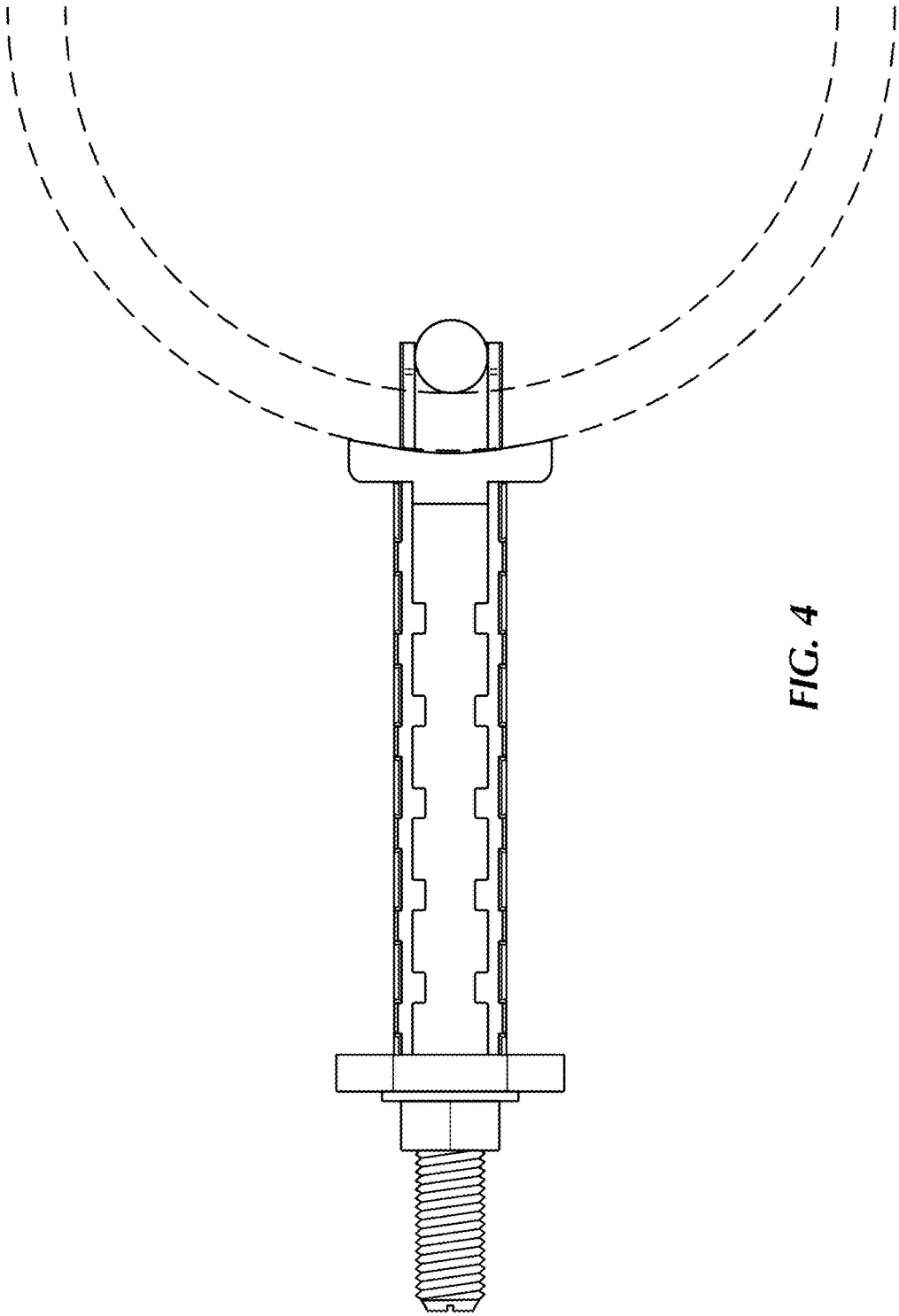

FIG. 4

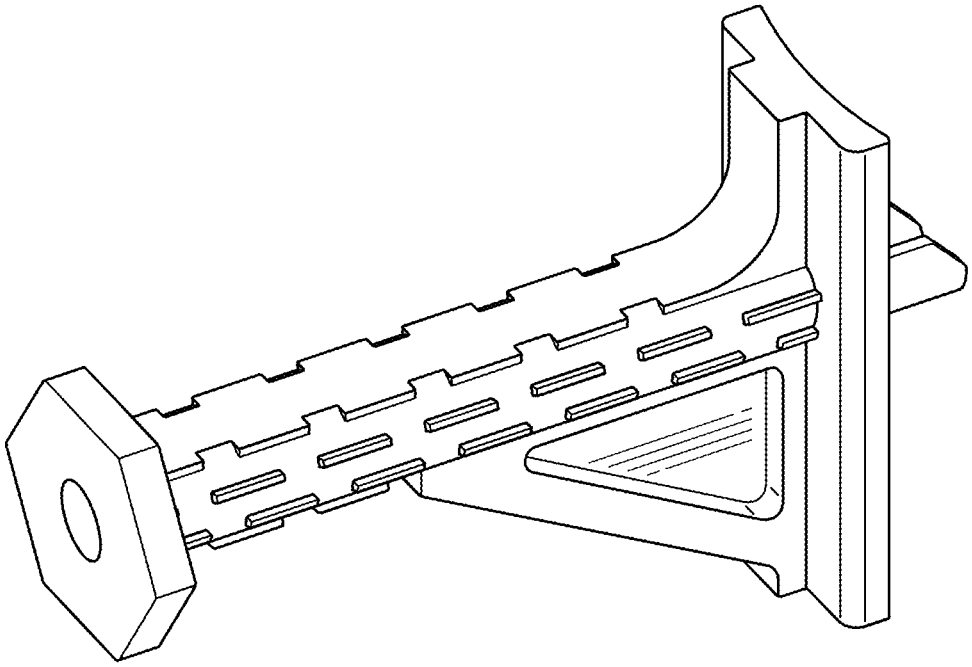

FIG. 5

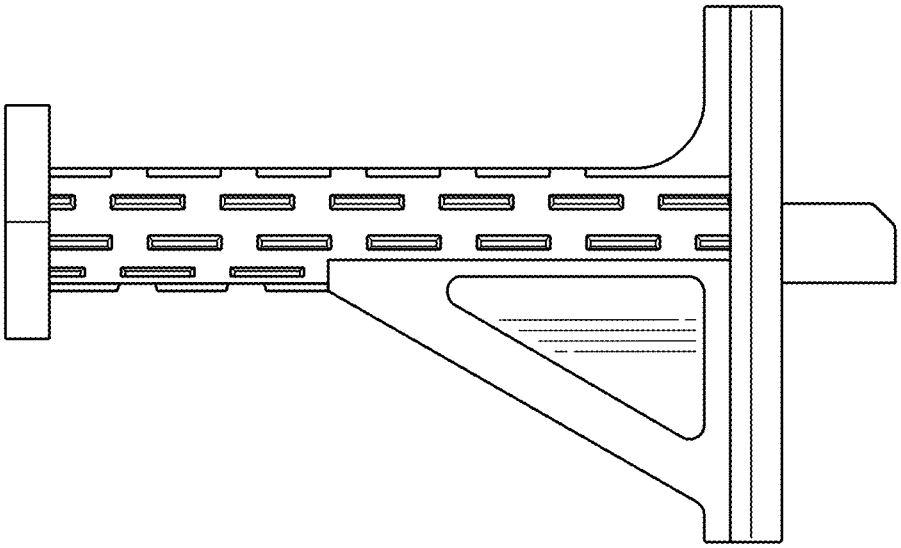

FIG. 6

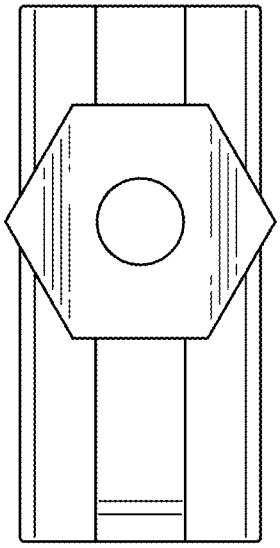

FIG. 7

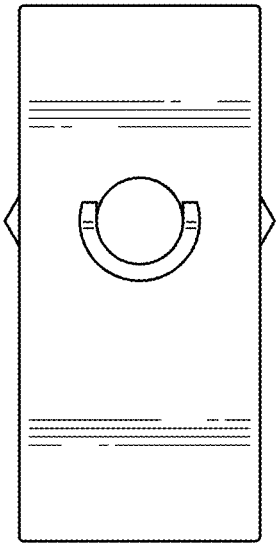

FIG. 8

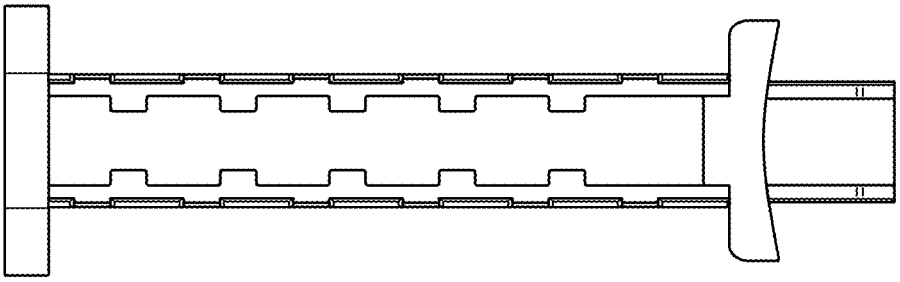

FIG. 9

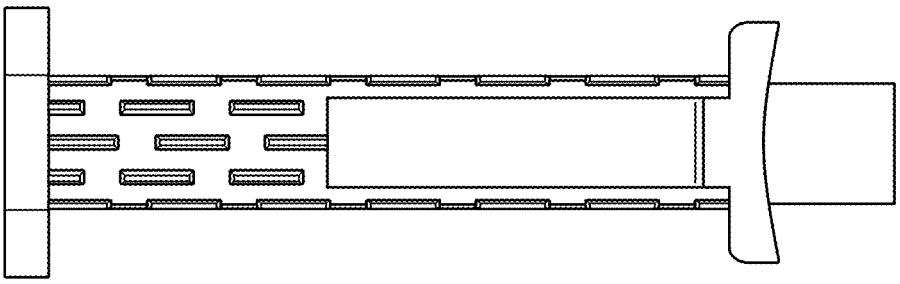

FIG. 10

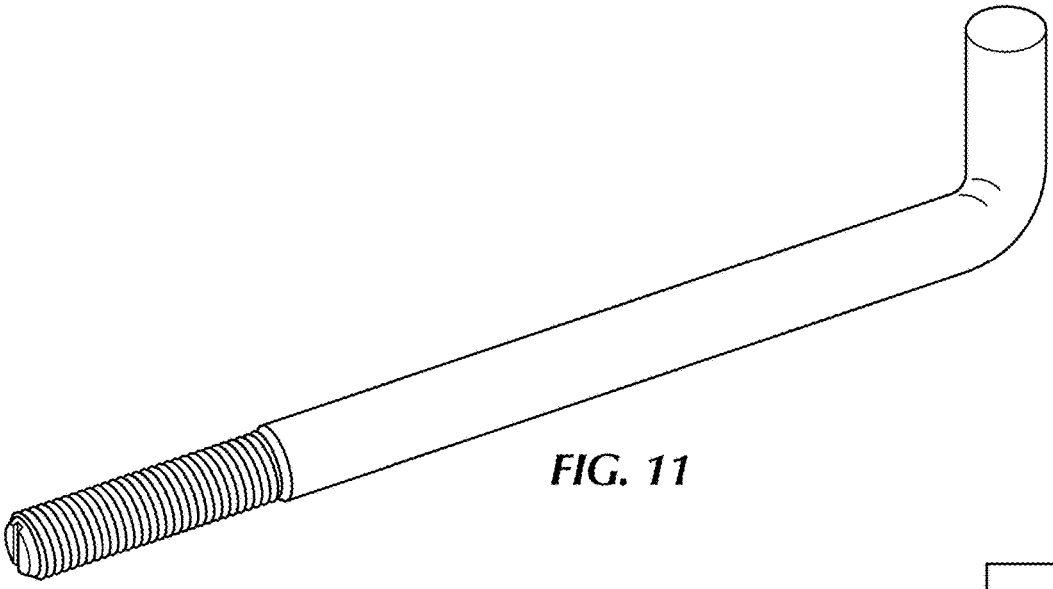

FIG. 11

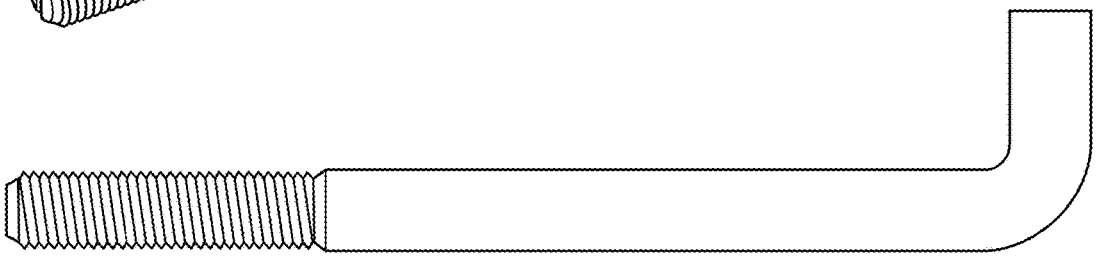

FIG. 12

FIG. 13

FIG. 14

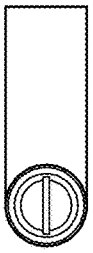

FIG. 15

FIG. 16