March 12, 1940. H. P. ELLIOTT 2,193,064

PRINTING APPARATUS

Filed April 14, 1939

Fig. 1.

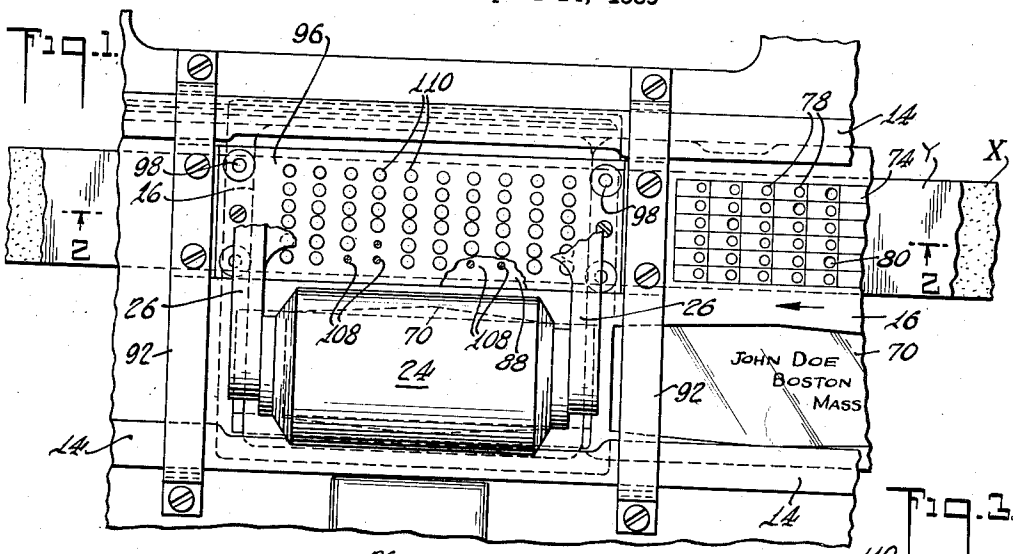

Fig. 2.

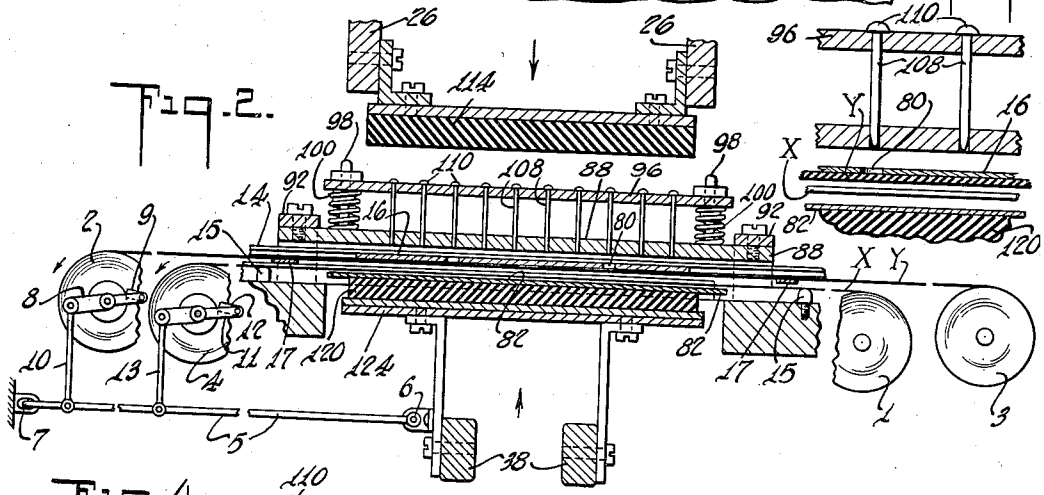

Fig. 3.

Fig. 4.

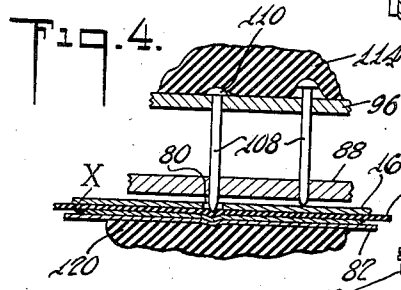

Fig. 5.

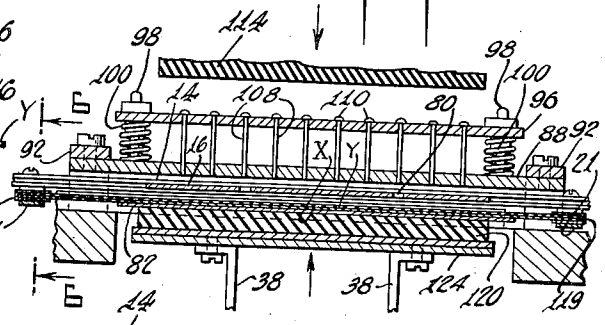

Fig. 6.

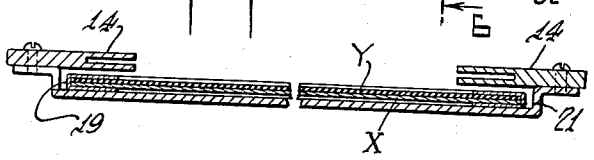

INVENTOR
Harmon P. Elliott.
BY
Starkweather
ATTORNEY

Patented Mar. 12, 1940 2,193,064

UNITED STATES PATENT OFFICE

2,193,064

PRINTING APPARATUS

Harmon P. Elliott, Watertown, Mass., assignor to The Elliott Addressing Machine Company, a corporation of Massachusetts

Application April 14, 1939, Serial No. 267,770

11 Claims. (Cl. 101—58)

This invention comprises certain further improvements on, or additions to, that described and claimed in my Patent No. 2,134,815, granted Nov. 1, 1938, embodying a statistical recording machine operating in conjunction with addressing apparatus employing card stencils, each having an extension frame in which one or more holes has been punched, each in special position, as shown at 80, 80, in Fig. 8 of said patent.

Cooperating with said perforated extension of the frame of the card stencil there are shown in said patent a multiplicity of reciprocating pins yieldingly mounted and pressed upon said card frame extension during each address printing operation so that the pin or pins that register with any of the above mentioned perforations in the card frame will be pushed through them and make holes at predetermined points through the paper on which a name and address are being simultaneously printed, as shown in Fig. 9 of said patent.

In practical use of the patented invention I have found that to keep the consumption of power in such paper perforating operation within commercial limits the pin points must be so fine that the perforations are not always easily seen by the user of the printed and perforated slip or sheet of paper, and to cure that difficulty I inserted an ink ribbon between the pin points and the paper on which the name and address were being printed, so that ink dots would then be formed thereon in place of the perforations originally produced therein. Such ink dots were slightly larger, and otherwise more easily legible, than the perforations, but a new difficulty developed after a short period of operation. That is to say, the pin points which were most frequently pressed against the ink-ribbon soon became covered with ink which, during subsequent operations was transferred to certain of the unperforated areas in each stencil frame then being used, thus making the perforations in such stencil difficult to distinguish from the ink dots soon accumulated thereon. Furthermore, these ink accumulations on the face of any stencil frame were soon offset onto the backs of other stencil frames pressed against them in the storage or addressing machine magazines, and when the stencils so marked on their backs were used in the addressing machine their accumulating ink dots were in turn offset on the paper being printed, thus producing false markings thereon in addition to the proper ones made by the pins passing through the perforations in that stencil frame then in printing position.

According to the present invention, however, I have overcome all these difficulties by adding another element to the combination in the form of a thin sheet of rubber, or similar flexible non-recording inkproof material, which is inserted between the needle points and the ink ribbon, thus masking the needle points and keeping them free from ink deposits. Also such added masking sheet tends to further magnify the area of each portion of the ink ribbon pressed by a pin-point against the paper being printed, and so to further enlarge the area of the ink dot formed on the paper and increase the legibility of the record so produced. A further advantage of this improvement results from the rubber thus saving the ink ribbon (the most costly element of the combination) from any destructive action of the sharp pin points and so prolonging its useful life. Also a successful ink-ribbon-using combination is operative on any kind of sheet or card on which the record is to be formed, while the apparatus of my Patent No. 2,134,815 is, generally speaking, commercially usable only on fairly thin and easily perforated paper.

The best form of apparatus at present known to me embodying my invention, together with one modification thereof, are illustrated in the accompanying sheet of drawings, in which:

Fig. 1 is a plan view of the portions of the apparatus forming the printing zone, with other parts broken away or omitted, and is substantially a copy of Fig. 4 of my said Patent 2,134,815, with the additional features of my present invention added.

Fig. 2 is a detail vertical section of certain of the same parts and others cooperating therewith, all portions thereof above the level of supporting plate 124 being shown as on a plane passing through line 2—2 of Fig. 1, with certain of the added features of my present invention shown in side elevation and somewhat diagrammatically.

Figs. 3 and 4 are enlarged details of the record printing pin mechanism with exaggerated spacing showing the press parts in open positions in Fig. 3 and in closed, printing positions in Fig. 4.

Fig. 5 is a detail vertical section similar to Fig. 2 showing a modification, and

Fig. 6 is a vertical cross section of the rubber and ink-bearing elements taken on line 6—6 of Fig. 5 with cooperating parts omitted.

Throughout the drawings like reference characters indicate like parts, and so far as possible the same reference characters have been applied

to the same parts as in corresponding figures of Patent 2,134,815.

Briefly stated, the construction and mode of operations of the basic printing and record-making mechanism, described in detail in said patent, are as follows: 16 indicates generally the card stencil having the panel 70 in which a name and address are cut. 74 is a printed form on a side extension of the frame comprising circles 78, certain of which have been punched out as indicated at 80. A series of these stencils are fed in succession along guides 14 from right to left as indicated by the arrows in Fig. 1, to and through the printing zone in which ink-carrying roll platen 24 carried by vertically swinging arms 26, 26, is alternately pressed down on the stencil beneath and then lifted to permit another to come into printing position and push out of it the preceding used one. A plurality of pins 108, with half round heads 110 are loosely supported in perforated plates 96 and 88 over the stencil frame extension of any stencil in printing position, so that they register with circles 78 on the latter and with any holes 80 therein. Upper plate 96 is yieldingly supported by springs 100 at a level such that the points of the pins will not touch the stencil frame while the latter is moving beneath them.

Parts of perforated plate 96 are shown broken away in Fig. 1 and the bodies of pins thereunder are indicated in cross section. Lower perforated plate 88 is supported on straps 92 which straddle guides 14. Plate 96 is guided on pins 98 which also retain springs 100 in position.

Vibrating arms 26, 26, also carry a rubber pad 114 which, when platen 24 is pressed down into address printing position, presses down on plate 96 and pin heads 110 so as to yieldingly force them down toward said stencil frame as indicated in Fig. 4. As there indicated, such pins 108 as register with holes 80 in said frame extension are then driven through such holes, while the movement of all other pins is stopped—such stoppage being rendered possible by the surface of rubber pad 114 bending around them.

Beneath the panel 70 of the stencil is a vertically swinging platen (not shown) cooperating with ink carrying roll platen 24 to print a name and address on any slip of paper 82 which may have been placed under the stencil and over said lower platen, which latter is not shown in Fig. 2 because an offset portion of the section plane passes behind it. Said lower platen is carried by vertically swinging arms 38 there shown in cross section, and rises when ink bearing platen 24 is lowered to effect a printing operation. Between each such printing, arms 26 rise and arms 38 fall, thus opening the press and allowing a fresh stencil to enter the printing zone. The arms 38 also carry a plate 124 supporting a rubber pad 120 located beneath the extension of the frame of the stencil which is in printing position, and which is beneath the bank of pins 108 as before described. Such pad 120 therefore rises when said pins are pressed downward and the forward end of the piece of paper 82 being printed then lies between and is seized by these two members of the record making mechanism. The apparatus so far described is the same as that shown and described in my before mentioned Patent 2,134,815, except that it may be necessary to increase the extent of press opening to produce a wide free space for the ink ribbon and rubber sheet and thus not have the former interfere with the feeding of the paper sheet 82 into printing position on pad 120.

The present invention, as before stated, comprises the introduction into the hereinbefore described patented combination of an ink ribbon such as shown at X which is held over the paper being printed, and a flexible ink-proof sheet such as a ribbon of thin rubber Y which is held between the ink ribbon and the points of pins 108. The rubber may be held against the pin-points, but the ink ribbon must be held away from pad 120 when the press is open to permit the paper 82 to be shoved in between them into printing position, and also to prevent the face of such pad being soon covered with ink. Preferably, also, ink and rubber sheets or ribbons should be movable between printing operations so that a given pin will not always be punching at the same points on each. I have shown, somewhat diagrammatically, two arrangements of supports permitting such intermittent movements, a step-by-step roll or drum feed in Fig. 2, and a shiftable supporting frame in Figs. 5 and 6.

In Fig. 2 ink ribbon X unwinds from spool 1, which would preferably have friction producing bearings, and passes over guides 15, 15, to take-up roll or spool 4, which also would have tight journal bearings or some other device to prevent it being easily revolved backward. Said spool 4 could be revolved step-by-step in a counterclockwise direction to slowly wind up the ink ribbon by any convenient step-by-step mechanism such as the friction pawl 12 on lever 11, connected by link 13 to lever 5—one end of which latter has a fixed slotted pivot bearing 7, while the other end has a pivotal connection at 6 to a support for pad 120 carried by one of the vibrating arms 38. Take-up spool 2 for the rubber ribbon Y would, as shown, similarly unwind it from spool 3 by operation of the similar friction pawl mechanism 8, 9, 10. Rubber ribbon Y should be held away from ink ribbon X by guides 17, 17, which are fast on the under faces of the stencil guides 14. While the printing press is closed, no ribbon feeding action will then occur, but during the press opening period each ribbon will be slightly moved to the left by the friction ratchet feeding devices above described. The ribbons will move different distances at each step because of differences in spool diameters and in spacing of the pivots for links 10 and 13 from the fulcrum of lever 5.

In Figs. 5 and 6 a sheet of rubber Y and of ink saturated fabric X are shown stretched together across the opening in a rectangular frame 19 which is loosely supported by clips 21, 21, fastened to the under surfaces of the stencil guides 14. The jar or vibration of the printing press elements may cause this frame to move slightly at times while the press is open, or the operator may be instructed to move it a little one way or the other occasionally to shift the points on the ribbon surfaces at which the needle pressures will be applied.

The clips 21 nearest the operator are offset so as to permit frame 19 to be slid in and out between them. This is indicated in Fig. 6 by the absence of cross hatching on the lefthand clip. This particular pair of clips do not shown in Fig. 5 because the plane of the section is behind them.

During each printing operation the particular pins 108 which register with perforations 80 in the frame of any stencil 16 beneath it will pass through such perforations, press rubber ribbon Y against ink ribbon X and deposit spots of ink

(transferred from the latter) on the paper 82—all as indicated in Fig. 4.

Various changes could be made in the details of the supports for ink and rubber ribbons, and in the printing press mechanism, without departing from the substance of the invention, so long as the ink ribbon is held over the surface on which printing is to be done, and a flexible septum impervious to ink is supported between said ribbon and the reciprocating member adapted to periodically force a small area of said ribbon against said surface.

Having described my invention, I claim:

1. In a recording mechanism comprising a plurality of pins normally having their points lying in one and the same plane, a pad having its face lying in an adjacent, parallel plane, and means for reciprocating said pin points toward and from said pad face, the combination, with said mechanism, of an ink ribbon located between said planes near said pad face and a flexible, ink-proof non-recording, masking sheet located between said pin points and said ink ribbon; whereby, when a sheet on which a record is to be made is inserted between said pad and said ink ribbon and any of said pin points are pressed upon said flexible sheet so as to force portions of the ink ribbon against said inserted sheet and pad, ink spots of larger diameter than said pin points will be deposited on said sheet, but no ink will adhere to said pin points.

2. In a recording mechanism comprising a plurality of pins normally having their points lying in one and the same plane, a pad having its face lying in an adjacent, parallel plane, and yielding pressure means for forcing said pin points against said pad face, the combination, with said mechanism, of an ink ribbon located between said planes near said pad face and a flexible, ink-proof non-recording, masking sheet located between said pin points and said ink ribbon; whereby, when a sheet on which a record is to be made is inserted between said pad face and said ink ribbon and any of said pin points are pressed upon said flexible sheet so as to force portions of the ink ribbon against said inserted sheet and pad, ink spots of larger diameter than said pin points will be deposited on said sheet, but no ink will adhere to said pin points.

3. A mechanism such as defined in claim 2 combined with means for shifting the position of said ink ribbon between reciprocations of said pins.

4. A mechanism such as defined in claim 2 combined with means for shifting the position of said ink-proof sheet between reciprocations of said pins.

5. A mechanism such as defined in claim 2 combined with means for shifting the positions of said ink ribbon and ink-proof sheet between reciprocations of said pins.

6. A mechanism such as defined in claim 2 having parallel oppositely grooved guides located in a plane extending between said pin points and pad combined with an open frame adapted to slide in said guides and having said ink ribbon and ink-proof sheet both stretched across an opening therein.

7. In a combined address printing and record making apparatus comprising a plurality of plates each having a uniformly located portion of its face provided with means for participating in the printing of a particular name and address and at least one perforation elsewhere located, means for pressing an article to be printed and said plate one toward the other and for supplying ink for a printing operation, mechanism for feeding said plates successively through the printing zone so formed, a plurality of parallel, endwise reciprocable pins adapted to have at least one of their points projected through such perforation in said plate, and means for yieldingly pressing all said pin points toward said plate once during each printing operation, the combination, with said above defined apparatus, of an ink ribbon and means for supporting it adjacent the perforated portion of said plate on the side thereof opposite that on which said pins are located and between it and any article on which a name and address are being printed, together with a flexible masking sheet of ink-proof non-recording material and means for supporting it between said ink ribbon and said pin points; whereby during each printing operation at least one spot of ink will be deposited on the article being printed at a point determined by the location of the perforation in the particular plate being used, but no ink will be deposited on any pin point.

8. An apparatus such as defined in claim 7 in which the support of at least one of the last two elements, ink ribbon and ink proof sheet, is manually adjustable so as to shift it transversely of the axes of said pins.

9. An apparatus such as defined in claim 7 combined with means automatically operable by a moving member of the printing apparatus for slightly shifting the position of said ink ribbon after each printing operation so that any given pin point will not be repeatedly pressing said ink-proof sheet on one and the same point on said ribbon surface.

10. An apparatus such as defined in claim 7 combined with means automatically operable by a moving member of the printing apparatus for slightly shifting the position of said ink ribbon and said ink-proof sheet after each printing operation so that any given pin point will not be repeatedly pressing one and the same portion of said ink-proof sheet on one and the same point on said ribbon surface.

11. An apparatus such as defined in claim 7 combined with means automatically operable by a moving member of the printing apparatus for slightly shifting the position of said ink ribbon and said ink-proof sheet different distances after each printing operation so that any given pin point will not be repeatedly pressing one and the same portion of said ink-proof sheet on one and the same point on said ribbon surface.

HARMON P. ELLIOTT.