Sept. 30, 1930. F. GOODMAN 1,777,275

DRESSING STAND

Filed April 22, 1929

Fig. 1.

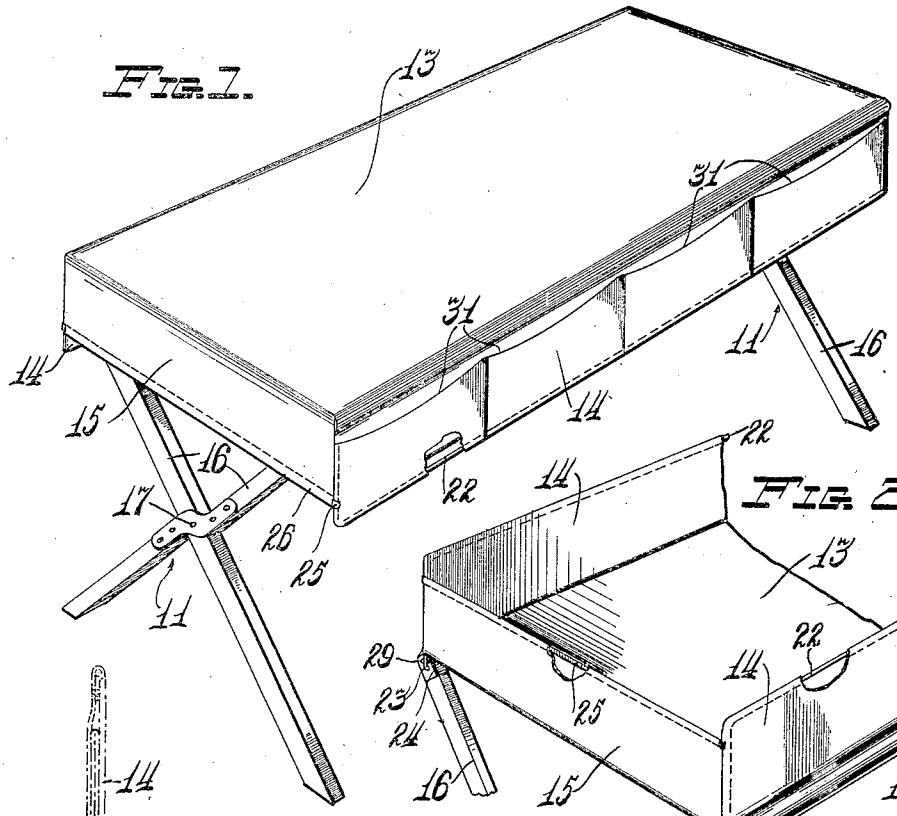

Fig. 2.

Fig. 3.

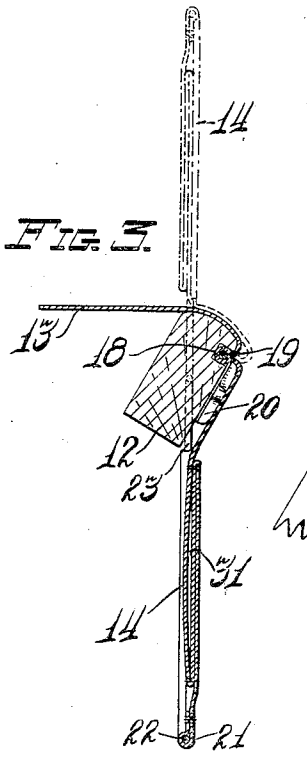

Fig. 4.

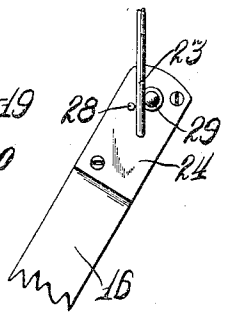

Fig. 5.

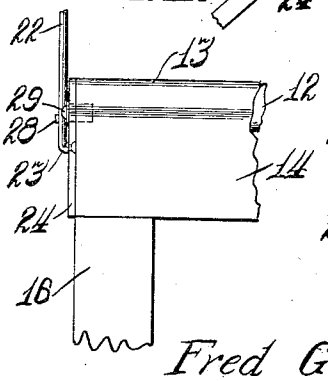

Fig. 6.

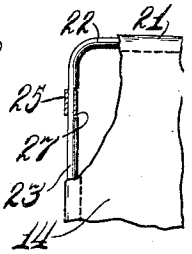

Inventor

Fred Goodman

By Daniel F. Brennan

Attorney

Patented Sept. 30, 1930 1,777,275

UNITED STATES PATENT OFFICE

FRED GOODMAN, OF MILWAUKEE, WISCONSIN

DRESSING STAND

Application filed April 22, 1929. Serial No. 357,206.

The present invention relates to improvements in dressing stands and particularly to a novel dressing stand for infants having foldable retaining walls thereon.

Dressing stands of this character are commonly provided with fixed retaining walls. Such walls are objectionable as they limit the adaptation of such stands for other purposes than that for which they are originally designed. A dressing stand for infants, having no retaining walls is impractical as it often becomes necessary to leave a child alone for a moment, during which time the child is quite likely to roll off.

In the present invention yieldable retaining walls are provided which are so constructed that they may easily and readily be moved into or out of position without requiring additional securing means other than that contained therein.

From the foregoing it can readily be understood that one of the prime objects of this invention is to provide an improved dressing stand for infants having novel foldable retaining walls thereon.

It is another object of the present invention to provide novel means for yieldingly maintaining the retaining walls on a dressing stand in position.

A further object of this invention resides in the provision of novel retaining means for maintaining the retaining walls in position which also provides suitable means for retaining said walls in folded position.

The foregoing and such other objects of the present invention as will appear hereinafter as the description proceeds, will be more readily understood from the following specification, reference being had to the accompanying drawing, in which an exemplary form of the invention is shown.

Fig. 1 is a perspective view of the improved dressing stand having the novel retaining walls in folded position below the plane of the table top.

Fig. 2 is a fragmentary perspective view of the dressing stand showing the retaining walls in vertical position.

Fig. 3 is a vertical sectional view through a portion of the dressing table showing the longitudinal supporting bar thereof having the covering secured thereto, the retaining wall being shown in position in dotted lines.

Fig. 4 is a fragmentary end elevational view of the dressing stand showing the novel pivotal mounting and retaining means for the side walls.

Fig. 5 is a side elevational view of the parts shown in Fig. 4.

Fig. 6 is an enlarged detail fragmental elevational view of one of the side retaining walls, showing the wire frame therein.

The invention, in general, comprises the foldable frame members 11 connected together at their respective upper ends by longitudinal supporting bars 12. A suitable covering 13 is arranged thereover substantially taut. This covering material preferably is of canvas and is of such size that it extends beyond the edges of the foldable frame to provide overhanging side and end portions 14 and 15 respectively. Suitable yieldable means is provided in these overhanging portions for yieldingly maintaining them in a vertical upright position, such as shown in Fig. 2 to provide suitable retaining walls for the dressing stand.

Referring to the drawing in detail, each of the end frame members 11 preferably include a pair of legs 16, pivotally connected at their center 17 to permit their being folded compactly. The respective upper ends of each of the corresponding leg portions are rigidly connected together by longitudinal supporting bars 12. This provides a very rigid foldable structure for supporting the flexible covering or top 13.

The covering material 13 may be secured to the longitudinal supporting bars 12 in any suitable manner, however it is preferable that said covering be secured thereto by longitudinal recesses 18 provided on the outside surface of said supporting bars. A rod or bar 19 is placed over the flexible covering material 13 and forced into said slot to provide means for securely retaining said material therein. To prevent accidental removal of the rods 19 from the recesses 18, wing-nuts 20 or other suitable retaining means (Fig. 3) are provided on the longitudinal

supporting bars 12 adjacent said slots which engages the rods 19 to retain same therein.

Each of the overhanging side members 14 is provided with a hem 21 which extends around the free edges thereof, and has mounted therein a frame member 22. This frame member 22 preferably is formed of wire bent substantially U-shaped, as shown, having its ends 23 pivotally mounted in suitable bearing plates 24 carried on the upper ends of the legs 16. A yielding member 25, preferably elastic, is mounted within the hem 26 on the longitudinal edge of each end member 15. The ends of the elastic are attached to the side portions of the wire frame 22, a notch 27 being provided thereon to prevent displacement of said elastic.

To position the side walls and end walls vertically, to provide retaining walls for the stand, the longitudinal side walls 14, having the frames 22 therein, are swung outwardly and upwardly on their pivots to the position shown in Fig. 2 and in dotted lines in Fig. 3. Stops 28 are provided on the bearing plates 24 to prevent the longitudinal side walls from swinging inwardly beyond the vertical. The swinging outwardly and upwardly of the side walls 14 also brings the end walls 15 upwardly due to the elastic connections therebetween. The elastic 25 serves to hold the side walls 14 tightly against the stops 28 and maintains the end walls 15 substantially taut.

Further assurance against displacement of the walls is provided by a detent 29, carried in the bearing plates 24, which is adapted to yieldingly engage behind the leg portions of the wire frame members 22. It can readily be understood that it is a simple matter to dispose of the retaining walls, by swinging the side walls 14 outwardly and downwardly carrying the end walls 15 therewith. The yielding member 25 mounted in each of the end portions prevents flopping of the overhanging portions when they are disposed below the plane of the dressing stand top. If desired suitable pockets 31 may be formed in the side portions 14 to provide suitable accommodations for miscellaneous articles.

While the preferred form of the invention has been shown and described in the foregoing, it is to be understood that this invention is capable of embodying numerous variations in structural detail and modifications, as to form, without departing from the spirit of the invention nor the scope of the appended claims.

I claim:

1. In a dressing table for infants having, a foldable frame and a covering, said covering having overhanging side and end portions; means for maintaining said portions vertically to form a retaining wall around said covering, said means comprising a rigid frame carried in each side portion pivotally mounted to the foldable frame; yielding means cooperating with the said pivotally mounted frames for retaining the end walls in position; and yieldable locking means mounted in the supporting frame for releasably retaining the side walls vertically.

2. A dressing table for infants comprising, a foldable frame including opposed pairs of pivotally connected legs having longitudinal bars connecting the respective upper portions thereof; a flexible cover on said frame, said cover having its ends and sides overhanging said frame; hems on the free edges of said overhanging portions; a U-shaped frame in the hem of each overhanging side portion, said frame having its ends pivotally mounted in the legs of the foldable frame; and an elastic band carried in the hem of each overhanging end having its ends secured to the U-shaped frame, whereby said overhanging members are yieldingly maintained in a vertical position.

3. A dressing table for infants comprising, a foldable frame and a flexible cover, said cover having its ends and sides overhanging; hems on the edges of said overhanging portions; and a wire frame carried in the hem of each overhanging side portion having its ends pivoted in the legs of the foldable frame; each end member having an elastic band in the hem thereof, the ends of said band being secured to the wire frame whereby the overhanging portions are yieldingly maintained in a vertical position to provide retaining walls for said cover.

4. A dressing table for infants comprising, a frame, including opposed pairs of pivotally connected legs having longitudinal bars connecting the respective upper portions thereof; a flexible cover on said frame secured to said longitudinal bars, whereby said cover is normally held taut and has its ends and sides overhanging; a wire frame carried in each overhanging side, said frame having its ends pivotally secured to the legs, and an elastic band in said overhanging end portions having its ends secured to the wire frame, whereby said overhanging portions are maintained vertically above said covering to provide a retaining wall therearound.

5. A dressing table for infants comprising, a frame, including opposed pairs of pivotally connected legs having longitudinal bars connecting the respective upper ends thereof; a flexible cover on said frame, said covering having its ends and sides overhanging; hems provided on the edges of the said overhanging portions; a wire frame in the hem of each longitudinal overhanging portion; said frame having its ends pivotally secured to the leg members; and an elastic band carried in the hem of the overhanging end portions secured at each end to the wire frame, whereby the overhanging portions are retained ver-

tically above said covering to provide a retaining wall therearound.

6. A dressing table for infants comprising, a foldable frame; a flexible cover on said frame; said cover having its ends and sides overhanging the frame; a wire frame in each longitudinal overhanging portion pivotally secured to the leg members of the foldable frame; and an elastic band carried in each of said overhanging end portions secured at its ends to the wire frame, whereby the overhanging portions are yieldingly held in a vertical position above the flexible cover to provide retaining walls therefor.

7. A dressing table for infants comprising, a foldable frame, including opposed pairs of pivotally connected legs, having longitudinal bars connecting the respective upper portions of said legs; a flexible cover mounted on said frame secured to said longitudinal bars, whereby said covering is normally held taut, said cover having side and end portions overhanging said frame; hems in said overhanging portions; a substantially U-shaped wire frame in the hem of each overhanging side portion; said frame having its free ends pivotally secured to the leg members; and an elastic band in the hem of the end portions, having their ends secured to the U-shaped frame, whereby said overhanging portions are maintained vertically above the said cover to provide retaining walls therearound.

In testimony whereof I affix my signature at Milwaukee, Wisconsin.

FRED GOODMAN.