R. N. RICHARDSON.

COOLING DEVICE FOR BEDS AND SLEEPING COMPARTMENTS.

APPLICATION FILED AUG. 22, 1917.

1,327,214.

Patented Jan. 6, 1920.

3 SHEETS—SHEET 1.

FIG. 1.

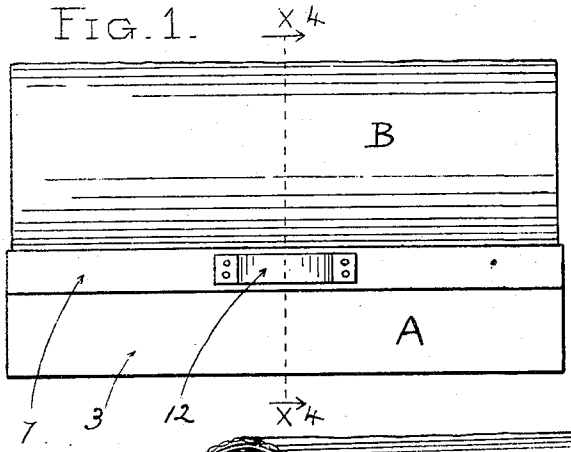

FIG. 2.

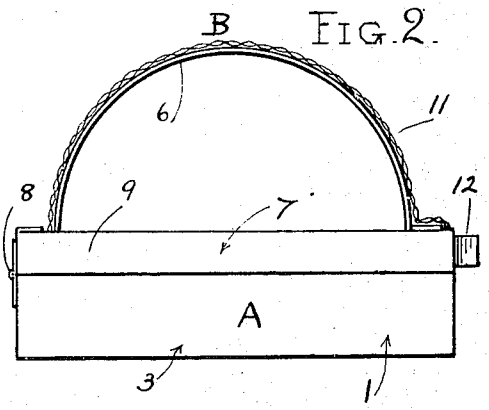

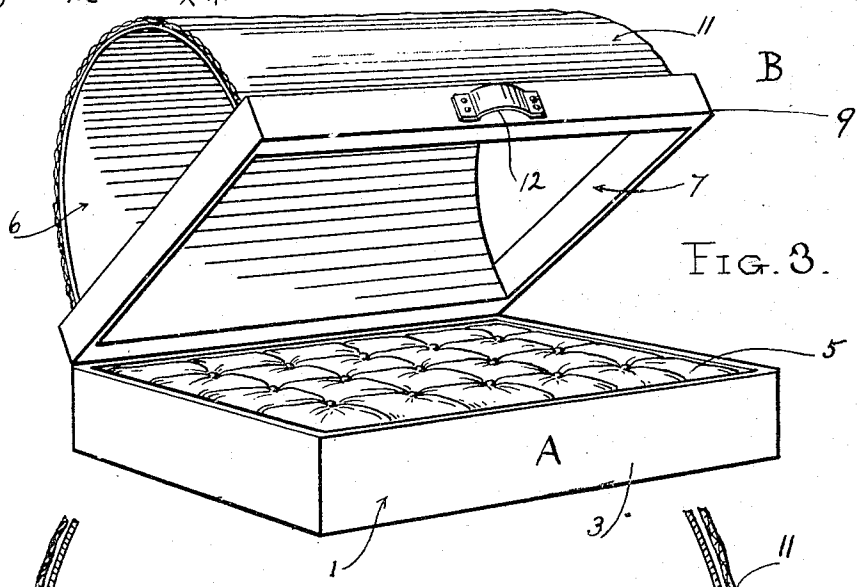

FIG. 3.

FIG. 4.

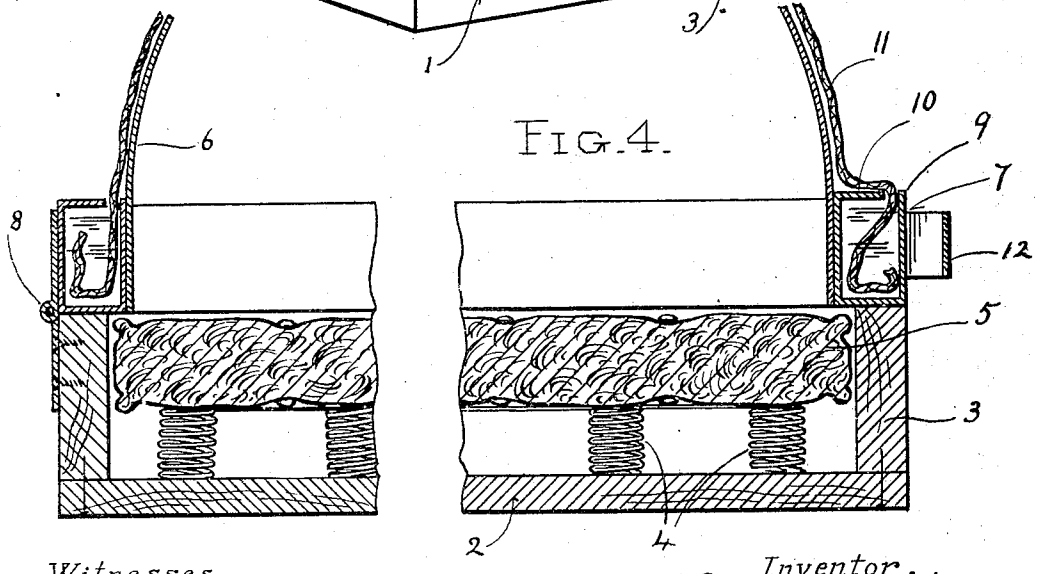

Witnesses,

A. Garing.

Chas. J. Rhumm

Inventor,

Robert N. Richardson,

by Raymond & Blakeslee,

His Attorney.

R. N. RICHARDSON.

COOLING DEVICE FOR BEDS AND SLEEPING COMPARTMENTS.

APPLICATION FILED AUG. 22, 1917.

1,327,214. Patented Jan. 6, 1920.

3 SHEETS—SHEET 2.

FIG. 5.

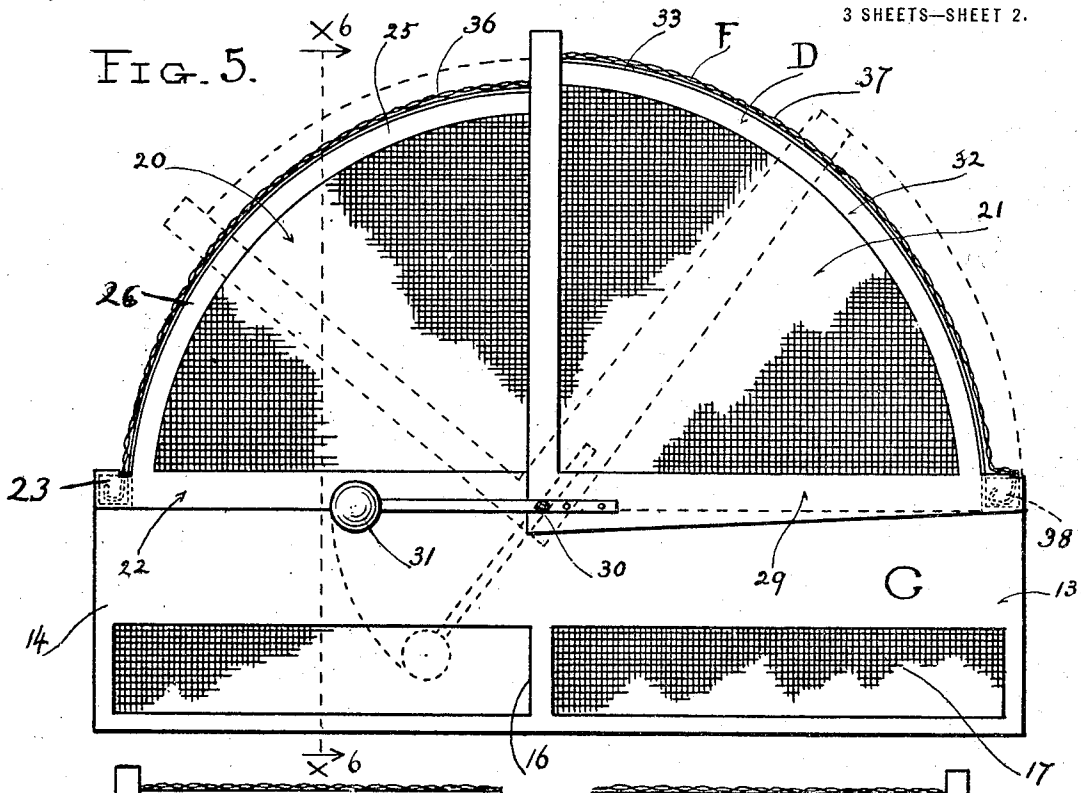

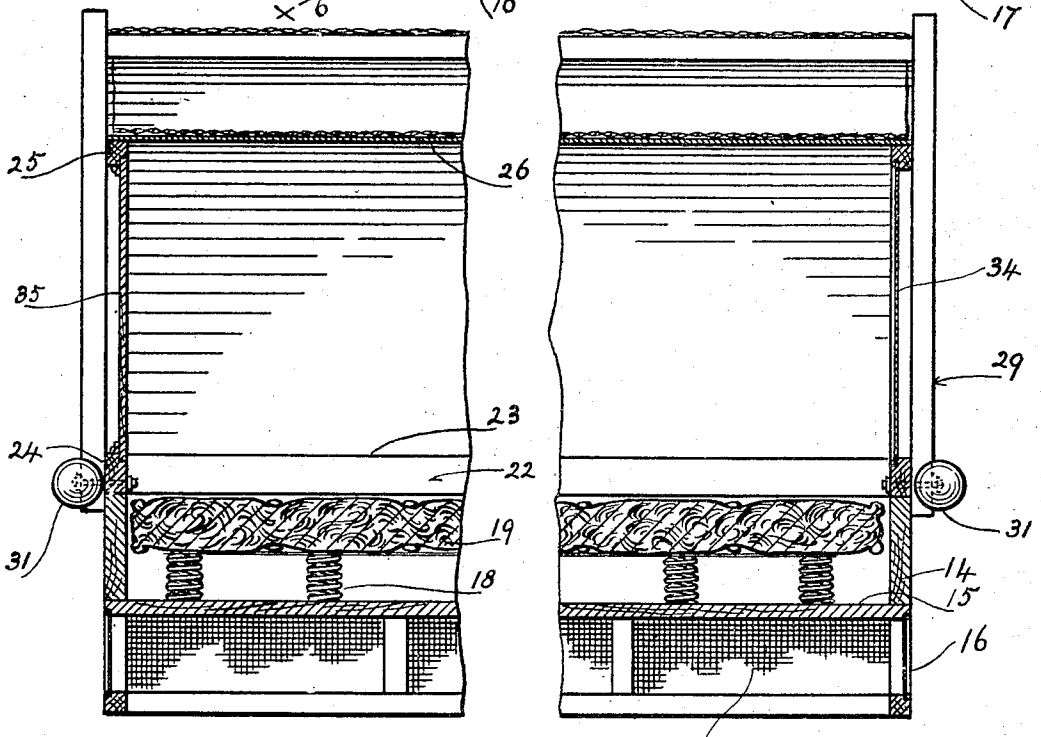

FIG. 6.

Witnesses,
H. Gearing
Chas. J. Chunn

Inventor,
Robert N. Richardson;
by Raymond Ives Blakeslee,
His Attorney.

R. N. RICHARDSON.

COOLING DEVICE FOR BEDS AND SLEEPING COMPARTMENTS.

APPLICATION FILED AUG. 22, 1917.

1,327,214. Patented Jan. 6, 1920.

3 SHEETS—SHEET 3.

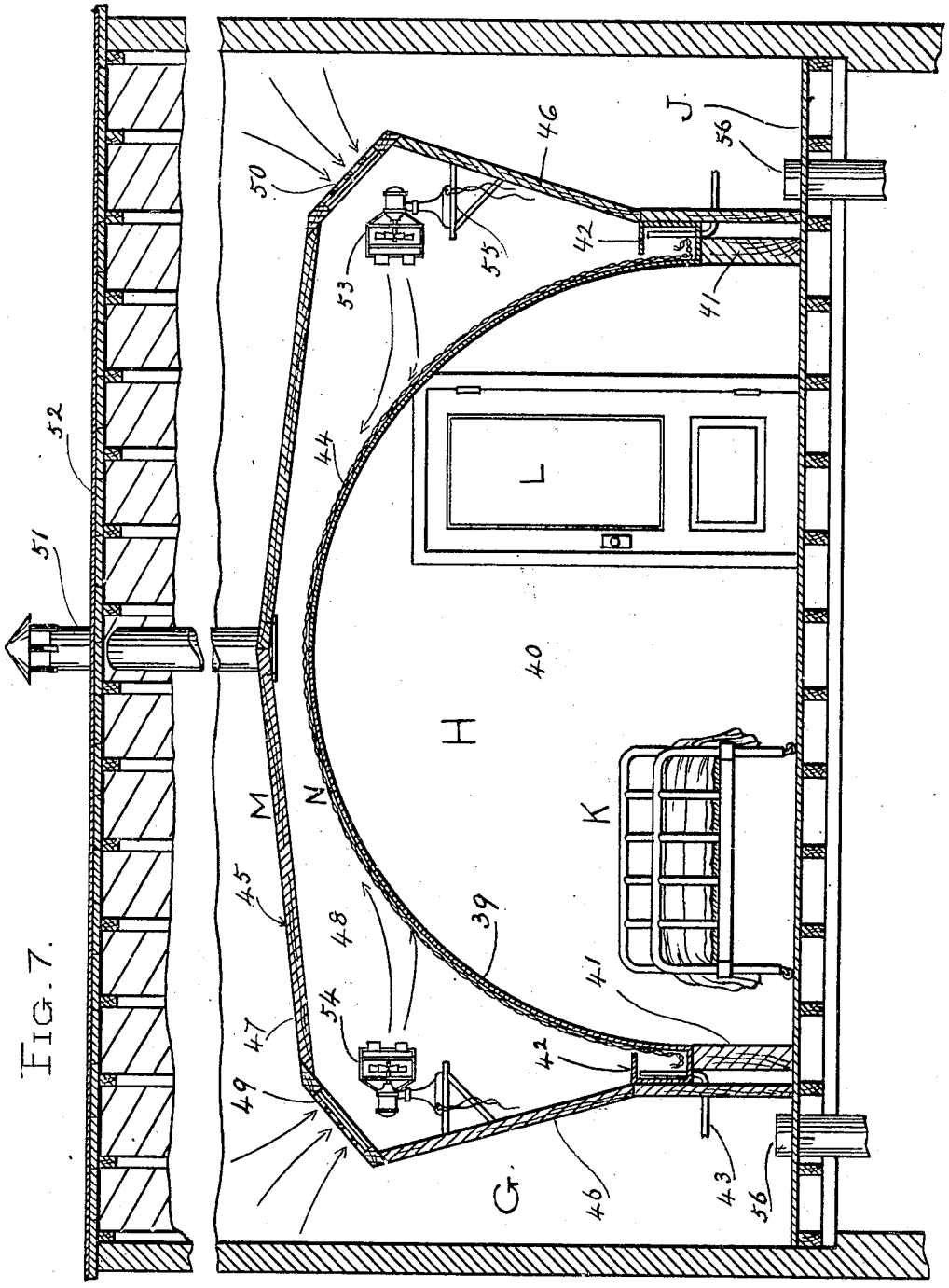

FIG. 7.

Witnesses,

H. Gearing

Chas. J. Chunn

Inventor,

Robert N. Richardson;

by Raymond Hirst Huxley,

His Attorney,

UNITED STATES PATENT OFFICE.

ROBERT NEWTON RICHARDSON, OF LOS ANGELES, CALIFORNIA.

COOLING DEVICE FOR BEDS AND SLEEPING-COMPARTMENTS.

1,327,214. Specification of Letters Patent. Patented Jan. 6, 1920.

Application filed August 22, 1917. Serial No. 187,633.

To all whom it may concern:

Be it known that I, ROBERT NEWTON RICHARDSON, a citizen of the United States, residing at Los Angeles, in the county of Los Angeles and State of California, have invented new and useful Improvements in Cooling Devices for Beds and Sleeping-Compartments, of which the following is a specification.

The present invention relates to a cooling device for sleeping compartments and other inclosed chambers, and has for its primary object to provide a device of this character which embodies novel features of construction whereby the evaporation of water upon the walls of the chamber is utilized to obtain a cooling effect.

A further object of the invention is to provide a simply constructed inexpensive and efficient means for cooling sleeping compartments and the like in hot weather.

Another object is to provide a means of the above character which will cool the air immediately surrounding and adjacent to the bed in a sleeping compartment with which it is associated, by a simple refrigeration process that may be carried out effectively at a minimum expense.

Other objects and advantages will appear in the course of the following description.

In the drawings:

Figure 1 represents a side elevation of the invention showing it embodying a bed having cooling means associated therewith;

Fig. 2 is an end elevation of the apparatus shown in Fig. 1;

Fig. 3 is a perspective view showing the bed with the cooling means raised to permit access to the bed;

Fig. 4 is an enlarged fragmentary sectional view taken on line x^4—x^4, Fig. 1, particularly illustrating the details of construction;

Fig. 5 is an end elevation of a modified form of the invention showing a part of the apparatus in shifted position in dotted lines;

Fig. 6 is a longitudinal sectional view broken intermediately of its ends and taken on the line x^6—x^6, Fig. 5; and

Fig. 7 is a fragmentary vertical sectional view broken at its upper side, of another modified form of the invention, showing a sleeping compartment provided with cooling means of novel construction.

This invention consists in the provision of a sleeping inclosure or space which is constructed, formed and adapted to receive a bed. The inclosure or space is constructed in order that a person or persons may have access thereto, and there is provided a means for producing evaporation which is associated with a wall that in part confines the inclosure. The evaporation which takes place produces a cooling effect that insures the comfort of the occupant of the bed or inclosure in extremely hot weather.

Referring to the drawings, in which like parts throughout the several views are designated by like reference characters, A designates as an entirety a bed which as shown comprises a box-like rectangular frame 1 having a bottom wall 2, and side and end walls 3. Suitable springs 4 are mounted upon the bottom wall 2 and support a mattress 5 of the ordinary construction. Although this type of bed is shown without legs and is particularly adapted to be placed upon the ground for camping purposes, it is to be understood that any other type of bed may be used if so desired.

There is provided a means B for cooling the bed or the air immediately above or around the latter. This means comprises a canopy or wall 6 of approximately semi-cylindrical construction and which is preferably formed of some suitable metal. This canopy is secured along its longitudinal edges to a rectangular frame 7 which is hinged as at 8 to the frame 1 of the bed A. The sides of the frame are formed of trough-like bars 9 which are adapted to contain water. The bars 9 on their upper sides are provided with flanges 10 that partially close the upper open sides of the bars.

There is provided a means for supplying moisture to the outer surface of the canopy 6 in order that the cooling action may take place. This means comprises an absorbent sheet or wick member 11 substantially equal in length and width to the canopy 6, and which is extended entirely over the outer surface of said canopy 6. The longitudinal edges of this wick member are disposed within the trough-like bars 9 arranged at opposite sides of the frame 7, there being sufficient space between the flanges 10 which project inwardly from the upper edges of the outer walls and the inner walls of the troughs 9 to permit of the insertion of the wick 11 into the trough-like bars.

The ends of the canopy 6 are open, but may if desired be closed with foraminous

material not shown. To provide for the opening of the canopy of the casing therein to permit access to the bed there is provided a handle 12 which is secured to the front bar 9 of the frame 7. To prepare the bed for use, water is poured into the containing means therefor comprising the troughs 9 of the frame 7, and the canopy may be raised as shown in Fig. 3 to permit of the occupancy of the bed. In this connection it will be noted that the flanges 10 serve to prevent the water from flowing out of the troughs 9 when the canopy is raised. By capillary action the water in the troughs 9 thoroughly saturates the wick 11 and the outer surface of the metal canopy 6 is moistened. The evaporation of the moisture upon, and about the outer surface of the canopy 6 causes the cooling of the atmosphere within the canopy, and this process is practically continuous; resulting in the maintenance of a cool atmosphere beneath the canopy and around the bed.

In this way it will be seen that an occupant of the bed may sleep with extreme comfort regardless of weather conditions. The canopy 6 may be raised and lowered as desired to permit of the getting into or out of the bed, and is sufficiently large and high to avoid the causing of any discomfort to an occupant of the bed.

Referring particularly to Figs. 5 and 6 of the drawings, wherein there is illustrated a modified form of the invention, C designates a bed having cooling means D associated therewith, both the bed and cooling means being modified in construction as compared to the bed and cooling means in the preferred form of the invention.

The bed C comprises a rectangular frame 13 which consists of side and end walls 14 and a bottom wall 15. The side and end walls 14 are provided with elongated openings 16 positioned at their lower sides, and the bottom wall 15 is secured to the side and end walls 14 at the upper edges of the openings 16 so as to provide a space beneath the bottom wall that will permit of the circulation of air beneath the bed. This space is screened, there being sheets of foraminous material 17 secured to the walls 14 and covering said openings 16. Suitable springs 18 mounted upon the bottom wall 15, support a mattress 19.

The cooling means D comprises a semi-cylindrical or arch-shaped hood canopy formed in sections designated 20 and 21. The section 20 is fixed in position and constitutes approximately half of the semi-cylindrical canopy, whereas the section 21 is tiltably mounted in position so that it may be moved into open position to permit occupancy of the bed.

Secured upon the upper edges of certain of the walls 14 is a frame 22. A bar 23 is secured to the upper edge of one of the side walls 14 and at its ends is secured to bars 24 that are mounted upon the upper edges of the end walls 14. Extending upwardly from the bars 23 and 24 at points adjacent to the junctures of said bars are arched bars 25 which support a curved preferably metal plate 26 forming a part of the body of the canopy or cover.

Section 21 comprises a frame 29 of segmental outline and which corresponds to the frame 22 including the bars 25 attached thereto. The lower inner corners of the frame 29 are pivoted as at 30 to the bars 24 of the frame 22 so that said section 21 is tiltable relative to the bed. The frame 29 is larger than the frame 22, so that it may be tilted over the latter as shown in dotted lines in Fig. 3. There are provided counterweights 31 which are secured to the frame 29 and acts to assist in the opening or tilting of the section 21, making the opening or tilting operation comparatively easy.

Mounted upon arched bars 32 forming a part of the frame 29 is a preferably metal plate 33 which constitutes the other part of the body of the canopy or cover D. Certain corresponding ends of the sections 20 and 21 are closed by sheets of foraminous material 34, and the other ends of the sections are closed by plates or panels 35. The panels 35 provide a weatherproof construction and permit of the exposing of the end of the device carrying said panels, to the elements. The foraminous material 34 permits of the free circulation of air beneath the canopy or cover.

There is provided a means F for moistening the entire outer surface of the canopy or cover D. This means constitutes the two sheets 36 and 37 of absorbent material, preferably wicking, which sheets are mounted upon the plates 26 and 33 of the sections 20 and 21. The side bar 23 of the frame 22 and the corresponding side bar of the frame 29 are of trough-like construction and provide reservoirs 38 containing water. The lower edges of these sheets 36 and 37 of wicking extend into the reservoirs 38 and the water in the reservoirs is distributed over the surfaces of the plates 26 and 33 by capillary action.

In the operation of this form of the invention the canopy or cover D which normally is in position as shown in Figs. 4 and 5, is opened, to permit of the occupancy of the bed C. To open the canopy or cover the tiltable section 21 is tilted into the dotted line position shown in Fig. 5, the tilting action being aided by the weights 31. After the bed has been occupied the occupant may easily lower the section 21 into position and the bed is then screened against mosquitoes and like insects. The water is distributed over the outer surfaces of the plates 26 and

33 by the capillary action of the wicks 36 and 37 and the moistened surfaces of said plates upon evaporating provide for a cooling action which causes the air within the canopy and over the bed to be cooled. This refrigerating or cooling action is continuous and provides for the maintenance of a cool area around the bed C. The circulation of air permitted beneath the bed by the particular construction thereof is effective in maintaining the bed and the adjacent area cool. It will be observed that an occupant of the bed may readily and easily raise the section 21 of the canopy or cover D, and as easily lower said section. The weatherproof construction of the bed at one end provided by the use of the panels 35 particularly adapts the bed for outdoor uses.

Referring particularly to Fig. 7 wherein there is illustrated another modified form of the invention, G designates a house, or other building structure or inclosure in which is provided sleeping compartments H including the floor J of the structure G. A bed K is disposed within the compartment H and a door L opening into the compartment is provided. This construction including the hereinbefore described elements comprises a sleeping compartment, but may be varied and otherwise constructed as desired, within a fair interpretation of the invention. There is provided a cooling means generally designated M which houses or covers the bed K. This means M includes a preferably metal semi-cylindrical canopy or wall 39 which as shown is closed at its ends by the walls 40 of the structure G or compartment H. This canopy 29 is supported along its longitudinal edges upon walls 41, and exteriorly of the canopy 39 at the lower edges thereof are provided reservoirs 42 adapted to contain water. There are provided drain pipes 43 for the reservoirs 42 and suitable means not shown may be provided to fill said reservoirs.

A means N is provided for distributing moisture over the outer surface of the canopy or wall 39. This means comprises a sheet 44 of absorbent material or wicking and said sheet is mounted upon the outer surface of the wall 39 with its lower edges disposed within the reservoirs 42.

There is provided a means for causing the circulation of air around and over the canopy or wall 39 so that the evaporation of the moisture and the subsequent cooling action will be effectively provided. This means constitutes a housing 45 comprising side walls 46, and a sectional top wall 47, the end walls of the housing being provided by the walls of the structure G or compartment H. This housing 45 provides a space 48 around the canopy 39. There are provided air intake openings 49 and 50 located on opposite sides of the housing in the upper wall 47 thereof. These openings 49 and 50 permit air to enter the space 48 and to circulate around the canopy 39. An air flue 51 communicates with the space 48 and is attached to the wall 47 of the housing and the roof 52 of the structure G, said flue 51 extending through the roof. The flue 51 provides for a circulation of air in the space 48, and to cause the air to be thoroughly distributed throughout the entire space there are provided oscillatory fans 53 and 54 which are located on opposite sides of and within the housing 45. Suitable stands 55 support the fans upon the walls 46 of the housing. Extending up through the floor J of the structure G are air inlet pipes 56 which communicate with the basement or space beneath the structure G and provide for the introduction of cool air to the interior of the structure G. Inasmuch as there is provided a suction through the action of the fans 53, it being noted that said fans are located adjacent to the openings 49 and 50, the air will be readily drawn or sucked through the pipes 56 into the structure G and through the openings 49 and 50 into the space 48.

In the operation of this form of the invention, assuming that the compartment H is occupied and water is contained in the reservoirs 42, the evaporating action will take place when the wick 44 has distributed the moisture over the outer surface of the canopy or wall 39 by capillary attraction, and the cooling of the atmosphere interiorly of the canopy or within the compartment H is thus provided. The fans 53 and 54 may be controlled by suitable means not shown and when operated provide for expeditious evaporation of the moisture upon the canopy. The oscillation of the fans insures a complete and thorough evaporation and causes air from the space within the structure G to be drawn through the openings 49 and 50 into the space 48 between the housing 45 and the canopy 39. Air will escape through the flue 51 and in this way a thorough circulation of air within the space 48 is provided.

With reference to the foregoing description and accompanying drawings, it will be seen that I have provided inexpensive and effective apparatus for cooling and keeping cool sleeping inclosures in order that occupants thereof may sleep in comfort in extremely hot weather.

It is to be understood that although the hereinbefore described and illustrated apparatus is the preferred form of my invention, yet various changes as to details of construction, size, shape, and proportion of parts may be resorted to when required, depending upon conditions, concurrent with the adoption of the invention, without sacrificing any of the advantages of the invention, and

the spirit and scope thereof as herein disclosed.

Having thus disclosed my invention, I claim and desire to secure by Letters Patent:

1. A cooling device for compartments including an arched inclosing wall defining the compartment to be cooled, a liquid containing trough extending along one side of the arched inclosing wall, an absorbent thickness fitted over the inclosing wall and having an edge portion thereof extended into the trough, and a guard flange extending inwardly from one of the upper edges of the trough to prevent spilling of the liquid contents of the trough.

2. A cooling device for compartments, including an arched wall defining the compartment to be cooled, liquid containing troughs extending along the sides of the arched inclosing wall at the bottom thereof, an absorbent thickness fitted over the inclosing wall and having the ends thereof extended into the troughs, and guard flanges projecting inwardly from upper edges of the troughs to prevent spilling of the liquid contents thereof.

3. A cooling device for compartments, including arched inclosing walls defining a compartment to be cooled, a housing inclosing the said walls in a spaced relation thereto, air inlets and outlets being provided in the housing, an absorbent layer extending over the inclosing walls, liquid containers receiving portions of the absorbent layer and feeding liquid thereto by capillary attraction, and fans within the space between the inclosing walls and housing to direct a current of air against the absorbent layer to produce a rapid evaporation of the liquid which is distributed thereby over the inclosing walls.

4. An apparatus of the character disclosed, an inclosure, a canopy within the inclosure, a housing for the canopy being spaced therefrom, producing an air space therebetween, said housing having openings therein communicating the air space with the inclosure and means for producing evaporation in intimate association with the canopy; an air outlet for said inclosure and an air inlet communicating with said inclosure.

In testimony whereof, I have signed my name to this specification in the presence of two subscribing witnesses.

ROBERT NEWTON RICHARDSON.

Witnesses:
ADA HUFFMAN,
CHAS. J. CHUNN.