Dec. 14, 1926. 1,610,772

L. D. GREGG

CANE CAR AND THE LIKE

Filed Jan. 10, 1925 3 Sheets-Sheet 1

Fig. 1.

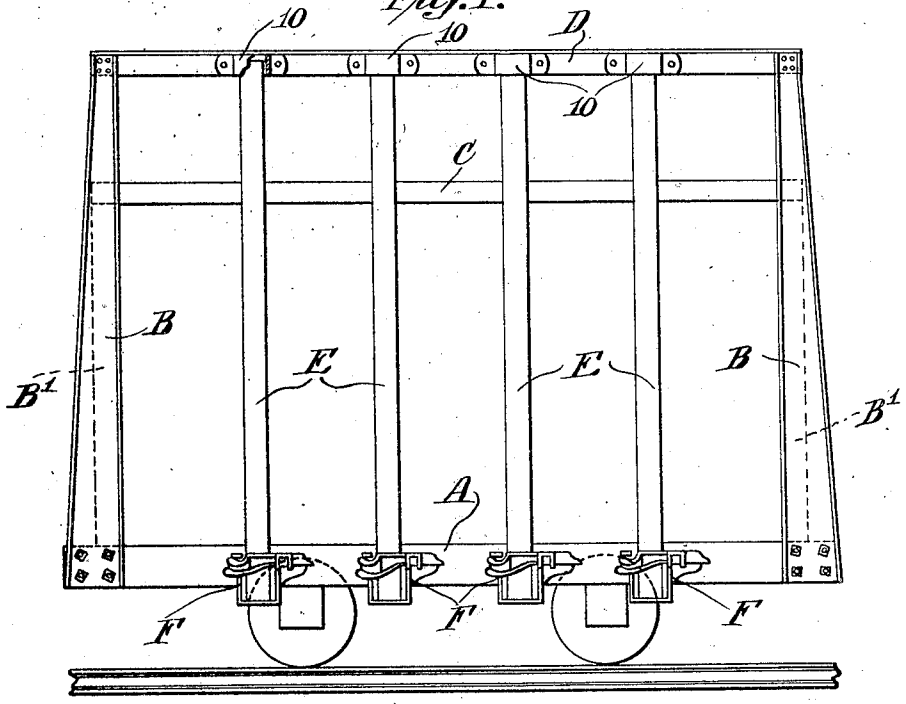

Fig. 2.

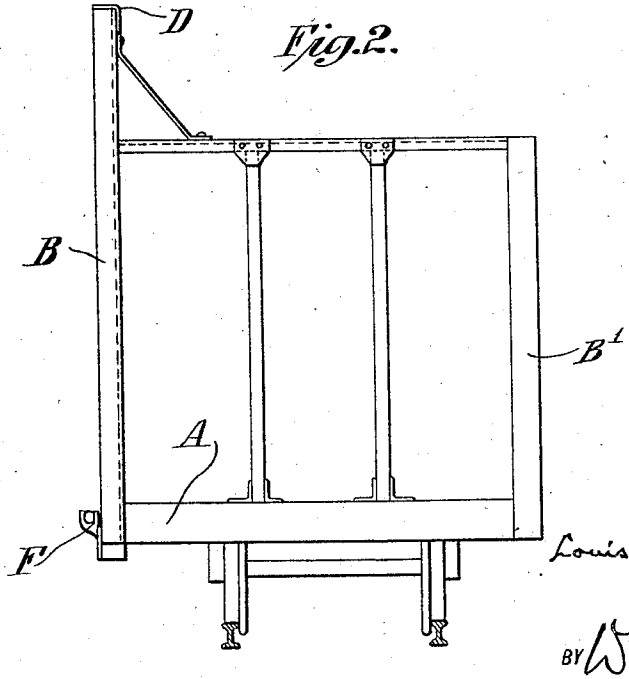

Louis D. Gregg
INVENTOR

BY Wm. B. Whitney

ATTORNEY

Dec. 14, 1926. 1,610,772

L. D. GREGG

CANE CAR AND THE LIKE

Filed Jan. 10, 1925 3 Sheets-Sheet 2

Fig. 3.

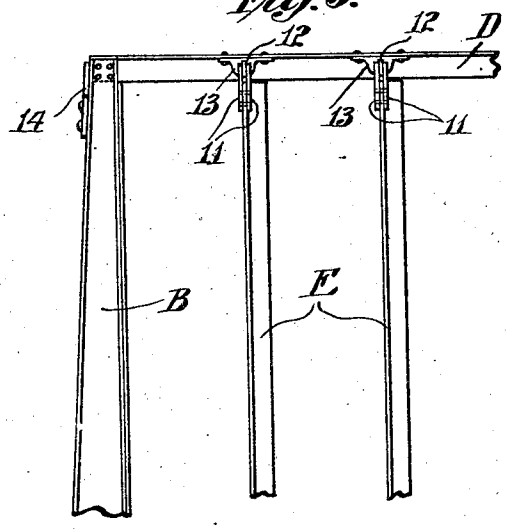

Fig. 4.

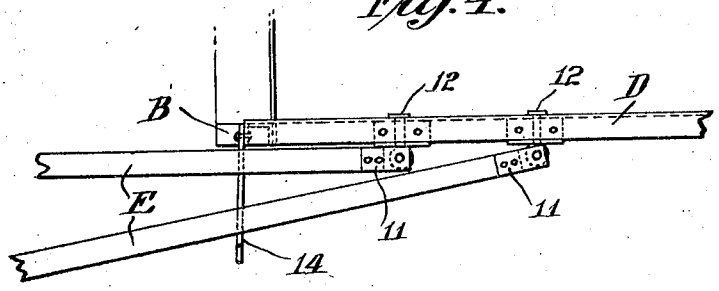

Fig. 5.

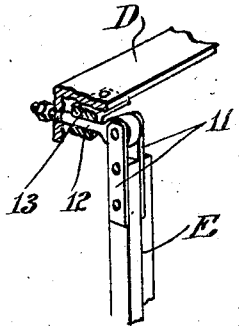

Louis D. Gregg
INVENTOR

BY Wm. B. Whitney
ATTORNEY

Dec. 14, 1926. 1,610,772

L. D. GREGG

CANE CAR AND THE LIKE

Filed Jan. 10, 1925 3 Sheets-Sheet 3

Fig. 6.

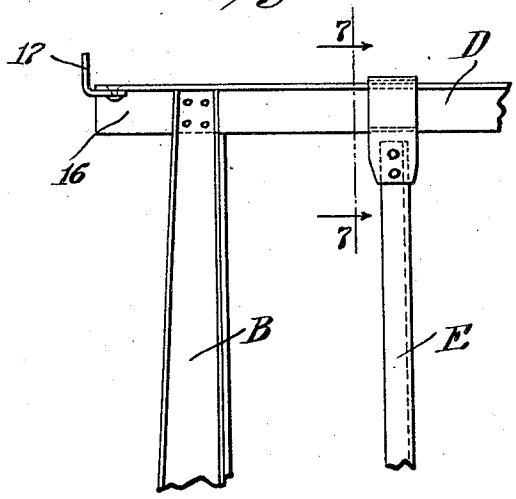

Fig. 7.

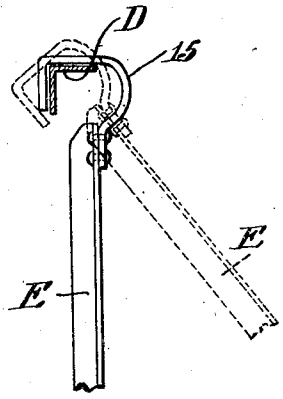

Fig. 8.

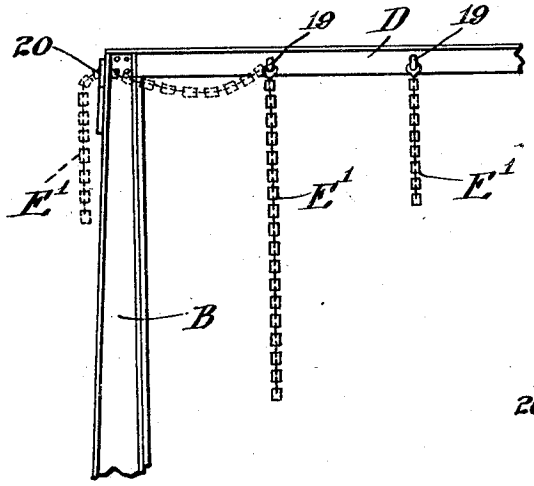

Fig. 9.

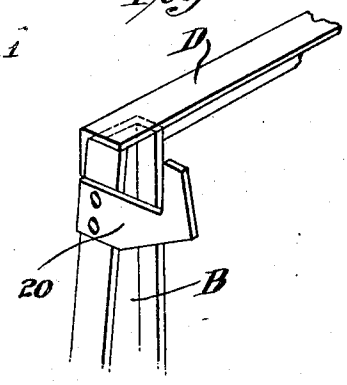

Louis D. Gregg
INVENTOR

BY W. B. Whitney
ATTORNEY

Patented Dec. 14, 1926. 1,610,772

UNITED STATES PATENT OFFICE.

LOUIS D. GREGG, OF HACKENSACK, NEW JERSEY, ASSIGNOR TO THE GREGG COMPANY, LIMITED, OF NEW YORK, N. Y., A CORPORATION OF NEW YORK.

CANE CAR AND THE LIKE.

Application filed January 10, 1925. Serial No. 1,649.

This invention relates primarily to railway or other cars of the type employed for the transportation of sugar cane, although not necessarily limited to this specific use, and, more particularly, to the closure on the discharge side or end of such cars.

These cars, now more or less standardized both in wood and in steel, comprise an underframe which is covered with a solid or slat flooring and commonly carries, the cane being usually loaded lengthwise of the car, rigidly mounted thereon solid or open-frame end walls and, in the case of the longer cars, intermediate thereof one or more similar transverse walls dividing the car into a plurality of compartments; and, for the side closure, are equipped with stakes removably set into stake-pockets attached usually to both sides of the underframe or, on one or both sides, with some form of side-discharge door pivotally mounted at the top or bottom to swing outwardly about a horizontal longitudinal axis.

As heretofore constructed, however, the cars have all proven unsatisfactory in some respect at least. In order to carry the amount of cane required for their economical use, the older cars, with the three-foot (more or less) ends and sides ordinarily provided have been loaded high above the top of the superstructure, which could only be done by expensive hand labor. When the loading is done by mechanical derricks or other labor-saving devices, the ends and sides of the cars must be made about twice the usual height, or say six feet. This in itself renders unavailable the discharge door hinged on its lower side, since the height (or width) of the door does not permit it to swing down perpendicularly or far enough to be out of the way of the falling cane. Moreover, the increased pressure of the load, the cane instead of being hand-laid being in a more or less jumbled condition when dropped into the cars by the mechanical loaders, is too great for the side stakes supported only at their lower ends in stake-pockets, and hence it has been the practice to further support these taller stakes, at or near their upper ends, by a rigidly mounted horizontal rail. But, while cars equipped with stakes thus supported and cars equipped with discharge doors pivoted at the top can be unloaded by lifting the cane out from the top or by tipping the cars about thirty degrees to the side, the fixed rail for bracing the stakes or to which the swinging door is hinged renders impossible the use of either of the two forms of convenient mechanical rakes which have been developed for the purpose of raking the cane from the cars.

My present object is to provide a practical closure which, while retaining the stakes and the fixed top rail support therefor, will permit of the use of the unloading rakes; and to this end the invention consists, first, in extending the corner wall stakes on the discharge side or end of the car some two and a half feet or so above the rest of the superstructure so that the rail fixed thereon will be at such height above the top of the load as not to interfere with the introduction of the rake mechanism, and, second, in so supporting the stakes on the rail that on the release of their lower ends they may either be removed or moved or swung aside to clear the side of the car.

The invention will be understood by reference to the accompanying drawings, in which—

Figures 1 and 2 are views, in side and end elevation respectively, of a car equipped with my improved stake and top rail closure, illustrating a simple and convenient means for supporting the stakes on the rail; Figs. 3 and 4 are broken views, in side elevation and in plan, and Fig. 5 is a detail, in perspective, of the upper portion of the closure at one end of a car, showing a different way for supporting the stakes on the rail; Figs. 6 and 7 are broken views showing, Fig. 6 in side elevation and Fig. 7 in section on the line 7—7 of Fig. 6, a third means for supporting the stakes on the rail; and Fig. 8 is a broken view showing, in side elevation, still another modification of the closure, wherein chains are substituted for the stakes, and Fig. 9 is a perspective view of a detail thereof.

As therein illustrated, A is the underframe of the car, B, B are the steel channel corner stakes of its end walls on what may be called the front or discharge side, C is the horizontal top rail which is fixed to the tops of the rear corner wall stakes B′ and with fixed stakes (not shown) constitutes the rear side closure. The front top rail D which throughout is shown as a rolled steel angle but may be any suitable shape, is securely joined to the extended upper ends of the front corner stakes, some two and a half feet above the

six foot (more or less) end walls and rear top rail; and on it are variously supported the upper ends of the stakes E, E, which at their lower ends are secured on the underframe in the usual or in any suitable releasing stake-pockets F, F or by other locking means.

In Fig. 1 the top rail is shown as provided with pockets which are formed by the shaped plates 10 10 attached to its web. The stakes, here of wood, are inserted therein and then locked to the underframe, and, when released, drop out therefrom.

As shown in Figs. 3—5 the stakes, of rolled steel angles, are attached in fixed position to the rail by universal joint connections, hinge straps 11, 11 at the upper end of each stake being pivoted to the head of a bolt 12 which is swiveled in a bearing-block 13 fixed to the flange, and in the web, of the rail. When released from the stake-pockets on the underframe, the stakes are swung up and around and rested, out of the way, two on a bracket 14 mounted on the upper end of one corner stake and the other two on a similar bracket on the top of the opposite corner stake.

The stakes may also be conveniently supported on the top rail, to swing outwardly and to slide thereon, by means of a shaped hook 15 fixed to the upper end of each stake, as shown in Figs. 6 and 7. Here, the rail is extended at each end 16 and provided with a stop 17, so that when released from the bottom pockets the stakes may be slid along the rail, half of them to one end and half to the other end, beyond the corner stakes to thereby clear the discharge opening.

Chains E′, E′, Fig. 8, attached for example to eye-bolts 19, 19 set in the flange of the top rail may replace the stakes, as the vertical members of the closure. They may be secured at their lower ends to the underframe in any suitable manner (not shown), as by common releasing hooks; and when unloading the car they are hung up out of the way over a bracket 20 (Figs. 8 and 9) on the upper end of each corner stake.

The invention can be further modified in its several details, within the scope of the appended claims.

What I claim as new, and desire to secure by Letters Patent, is—

1. In a vehicle of the character described, the combination with an underframe and two spaced walls of a discharge closure comprising a horizontal rail which at its ends is rigidly mounted on corner stakes at a height substantially above the top of the walls and a plurality of vertical members which at their upper ends are supported by the rail and movable with respect thereto and are releasably secured at their lower ends on the underframe.

2. In a vehicle of the character described, the combination with an underframe and two spaced walls of a discharge closure comprising a horizontal rail which is rigidly supported at a corner of each wall at a substantial height above the top of the wall and a plurality of vertical members which are releasably secured at their lower ends on the underframe and at their upper ends are supported on the rail in manner permitting them to be moved with respect thereto on their release from the underframe to provide a clear discharge opening.

3. In a vehicle of the character described, the combination with an underframe and two end walls approximately six feet in height of a discharge closure comprising a horizontal rail rigidly supported on corner stakes at a height some two and a half feet above the walls, a plurality of stakes which are releasably secured at their lower ends on the underframe and at their upper ends are supported on the rail by means permitting them to be moved with respect thereto so as to substantially clear the entire discharge side, and means for holding the stakes when released from the underframe in such clearance position.

4. In a vehicle of the character described, the combination of underframe, end walls having on one side of the vehicle corner stakes which extend substantially above the wall, a horizontal rail fixed to the top of the corner stakes, a plurality of stakes mounted in spaced relationship on the rail to swing outwardly and at their lower ends at least to move longitudinally, means for releasably securing the stakes on the underframe, and means at the ends of the vehicle for holding the stakes clear of the space between the walls.

5. In a vehicle of the character described, the combination of underframe, end walls having on one side of the vehicle corner stakes which extend substantially above the walls, a horizontal rail fixed to the top of the corner stakes, a plurality of stakes secured at their upper ends to the rail in spaced relationship by universal joint connections, means for releasably securing the lower ends of the stakes at the side of the underframe, and means carried by the corner stakes for holding the stakes in substantial horizontal position close to the level of the rail.

LOUIS D. GREGG.