P. J. QUINLAN.

PULLING IMPLEMENT.

APPLICATION FILED NOV. 24, 1917.

1,261,164. Patented Apr. 2, 1918.

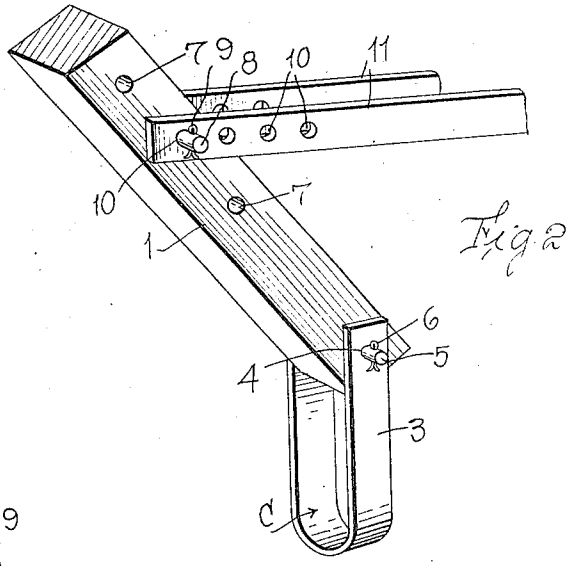

Fig. 2

Fig. 1

Fig. 3

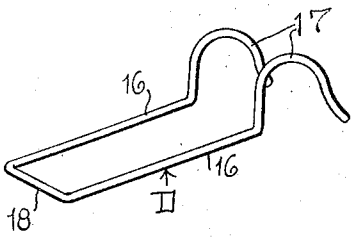

Inventor

PATRICK J. QUINLAN

By Watson E. Coleman

Attorney

UNITED STATES PATENT OFFICE.

PATRICK J. QUINLAN, OF GARY, SOUTH DAKOTA.

PULLING IMPLEMENT.

1,261,164. Specification of Letters Patent. Patented Apr. 2, 1918.

Application filed November 24, 1917. Serial No. 203,755.

To all whom it may concern:

Be it known that I, PATRICK J. QUINLAN, a citizen of the United States, residing at Gary, in the county of Deuel and State of South Dakota, have invented certain new and useful Improvements in Pulling Implements, of which the following is a specification, reference being had to the accompanying drawings.

This invention relates to certain improvements in pulling implements and has relation more particularly to a device of this general character especially designed and adapted for use in the applying of vehicle springs, shock absorbers, and the like.

And it is an object of the invention to provide a novel and improved device of this general character including a pulling lever adapted to be pivotally engaged with a wheel of a vehicle or other support and which is provided with means engageable with a spring or the like whereby requisite pull may be imparted to said spring or the like to facilitate the assembling or application thereof.

Furthermore it is an object of the invention to provide a novel and improved pulling implement of this general character wherein a wheel engaging member is employed for co-action with the lever comprised in the member for holding said lever against movement under the influence of the tension of the spring or the like with which the implement is employed.

The invention consists in the details of construction, and in the combination and arrangement of the several parts of my improved pulling implement wherein certain important advantages are attained and the device rendered simpler, less expensive and otherwise more convenient and advantageous for use, as will be hereinafter more fully set forth.

The novel features of my invention will hereinafter be definitely claimed.

In order that my invention may be the better understood I will now proceed to describe the same with reference to the accompanying drawings wherein:

Figure 1 is a view in elevation illustrating a pulling implement constructed in accordance with an embodiment of my invention and in applied position;

Fig. 2 is a fragmentary view in perspective of the lower end portion of my improved implement with certain of the parts omitted; and

Fig. 3 is a view in perspective of the holding device as herein employed.

As disclosed in the accompanying drawings 1 denotes an elongated lever or bar having an opening 2 disposed through an end portion thereof. C denotes a metallic clip substantially U-shaped in form and having its arms 3 provided in their free end portions with the openings 4 adapted to register with the openings 2 in the lever or bar 1. Disposed through the registering openings 2 and 4 is a headed member 5 having the shank thereof extending beyond the side of the lever or bar 1 and insertible through said extended portion of the shank is a cotter pin 6 or the like whereby the headed member 5 is effectively held in applied position. The headed member 5 also serves as a pintle which permits relative swinging movement of the lever or bar 1 and the clip C.

The lever or bar 1 at a predetermined point inwardly of the clip C is provided with a series of longitudinally spaced openings 7 through which is adapted to be directed a headed member 8. Co-acting with the headed member 8 is a cotter pin 9 to maintain said headed member in applied position. The headed member 8 is also adapted to be directed through the openings 10 disposed in predetermined spaced relation longitudinally of the elongated rigid straps or flat arms 11 whereby said straps or arms 11 are pivotally engaged with the lever or bar 1. In practice the straps or bars 11 are arranged at opposite sides of the lever or bar 1. It will also be self evident that by having a series of openings 7 in the lever or bar 1 and a series of openings 10 in the straps or arms 11 various adjustments of the straps or arms 11 relative to the lever or bar 1 may be had in accordance with the requirements of practice.

The straps or arms 11 are substantially in parallelism and disposed through the outer ends thereof is a headed member 12 having co-acting therewith in a conventional manner a cotter pin 14 for a purpose which is believed to be clearly apparent. The headed member 12 is also directed through the end links of a chain 15 whereby a loop member is afforded and which is adapted to be suitably engaged with the end portion of a vehicle spring or the arm of a shock absorber so that said spring or arm may have the requisite pull imparted thereto in order to facilitate its connection with the axle A

of a vehicle or to any other suitable support.

In practice the clip C is engaged with the outer end portion of the hub of a wheel whereby a support is afforded for the lever or bar 1 and which lever or bar 1 is upwardly directed. The straps or arms 11 are disposed between the spokes of a wheel so that the loop afforded by the chain 15 may be suitably engaged with a vehicle spring, an arm of a shock absorber, or other member which is to be applied or connected to the vehicle axle or other support. After the requisite pull has been imposed upon the member to be assembled or applied, the lever or bar 1 is held against retrograde movement under the influence of the tension of such member through the medium of the holding device D.

As herein embodied, the holding member D is substantially U-shaped in form and has the free end portion of its side arms 16 provided with the downwardly facing hook members 17 which are adapted to be engaged over the tire of the wheel. The intermediate portion 18 of the device D is adapted to be engaged within one of the notches 19 arranged in predetermined spaced relation longitudinally of the lever or bar 1 and in the face of said bar or lever 1 beyond which the straps or arms 11 extend.

From the foregoing description, it is thought to be obvious that a pulling device constructed in accordance with my invention is particularly well adapted for use by reason of the convenience and facility with which it may be assembled and operated and it will also be obvious that my invention is susceptible of some change and modification without materially departing from the scope of the appended claims and for this reason I do not wish to be understood as limiting myself to the precise arrangement and formation of the several parts herein shown in carrying out my invention in practice except as hereinafter claimed.

I claim:—

1. A pulling implement of the character described comprising an elongated lever, a substantially U-shaped clip pivotally engaged with one end portion of the lever and affording a securing means, an arm pivotally engaged with the lever inwardly of the end thereof with which the clip co-acts, an attaching member carried by the arm, and a holding member provided with anchoring means and engageable with the lever for holding the lever against movement in one direction.

2. A pulling implement of the character described comprising an elongated lever, a substantially U-shaped clip pivotally engaged with one end portion of the lever and affording a securing means, an arm pivotally engaged with the lever inwardly of the end thereof with which the clip co-acts, an attaching member carried by the arm, said lever being provided with a series of spaced notches, and a holding member provided with securing means, and adapted to seat within the notches of the lever.

3. In combination with a wheel provided with a hub, a pulling implement including an elongated lever, a hub member engageable with the hub of the wheel and pivotally connected with an end portion of the lever, an attaching member engaged with the lever at a point inwardly of the hub engaging member, and a holding member engageable with the peripheral portion of the wheel and co-acting with the lever for holding the same against movement in one direction.

In testimony whereof I hereunto affix my signature in the presence of two witnesses.

PATRICK J. QUINLAN

Witnesses:
W. I. Noble,
T. J. Law.

Copies of this patent may be obtained for five cents each, by addressing the "Commissioner of Patents, Washington, D. C."