Oct. 28, 1969 SEISAI ANBO 3,474,698

MOUTHPIECE RECEIVER FOR BRASS MUSICAL INSTRUMENTS

Filed Feb. 7, 1968 2 Sheets-Sheet 1

FIG. 1

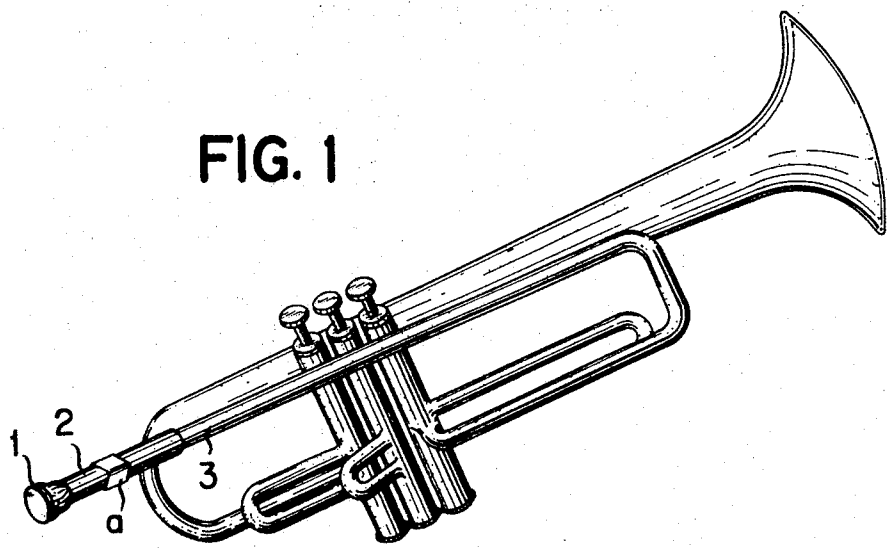

FIG. 2 PRIOR ART

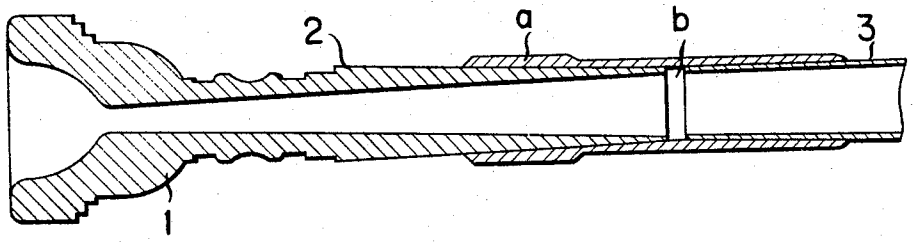

FIG. 3

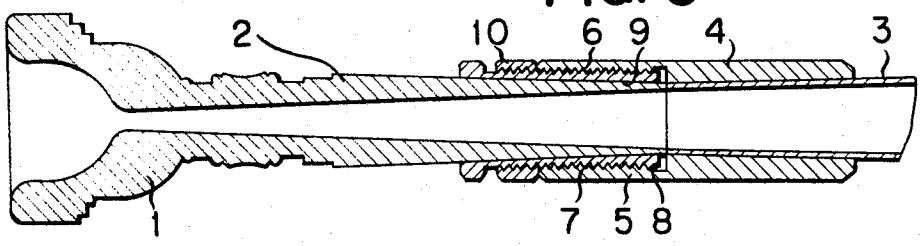

Seisai Anbo

BY

INVENTOR.

George B. Oujevolk
Attorney

Oct. 28, 1969 SEISAI ANBO 3,474,698

MOUTHPIECE RECEIVER FOR BRASS MUSICAL INSTRUMENTS

Filed Feb. 7, 1968 2 Sheets-Sheet 2

FIG. 4

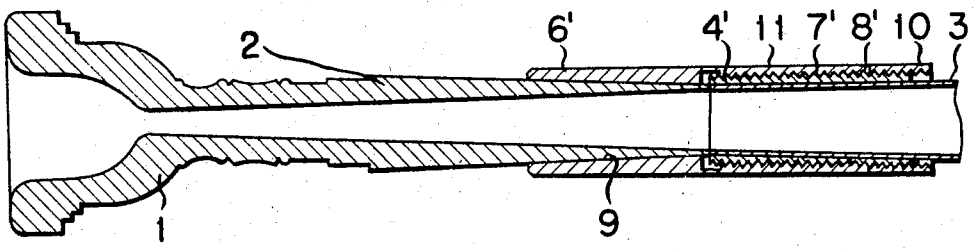

FIG. 5

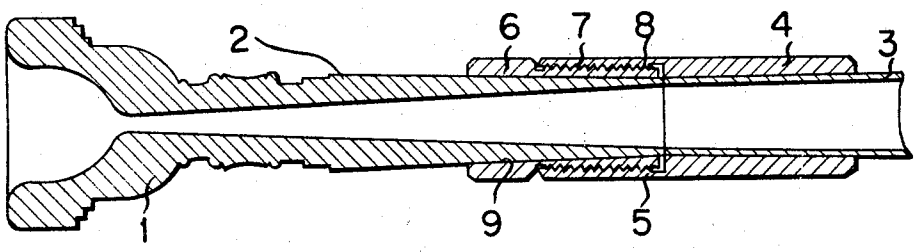

Seisai Anbo

BY

INVENTOR.

George B. Clizerolle

Attorney

United States Patent Office

3,474,698

Patented Oct. 28, 1969

3,474,698

MOUTHPIECE RECEIVER FOR BRASS MUSICAL INSTRUMENTS

Seisai Anbo, Hamamatsu-shi, Japan, assignor to Nippon Gakki Seizo Kabushiki Kaisha, Hamamatsu-shi, Shizuoka-ken, Japan, a corporation of Japan

Filed Feb. 7, 1968, Ser. No. 703,745

Int. Cl. G10d 9/02

U.S. Cl. 84—399

1 Claim

ABSTRACT OF THE DISCLOSURE

A mouthpiece receiver provided with a means for inserting a mouthpiece into the mouthpiece receiver until the bottom or innermost end of the mouthpiece and the rear end of the mouthpipe are contacted with each other.

Background of the invention

The present invention relates to a device for connecting the mouthpiece and mouthpipe of a brass musical instrument and more particularly a connecting device (commonly referred to as a "mouthpiece receiver") which had made it possible to control the extent of inserting the mouthpiece so as to bring the bottom or innermost end of the mouthpiece exactly into close contact with the rear end of the mouthpipe.

In the conventional brass musical instrument illustrated in FIG. 1, the tapered portion 2 forming the shank of a mouthpiece 1 and a mouthpipe 3 are connected by fitting the tapered portion 2 of the mouthpiece 1 into a mouthpiece receiver *a* brazed to the mouthpipe 3 as minutely shown in FIG. 2. The mouthpiece receiver *a* has a caliber and a taper corresponding to the tapered portion of the mouthpiece 1.

The aforementioned mouthpiece receiver is of almost the same size and design, though it slightly varies in detail with the manufacturing companies. On the other hand, the mouthpiece to be fitted into said receiver is selected from among those marketed by each manufacture in accordance with the taste of a player. Thus it happens very often that a mouthpiece produced by B or C company is fitted into a mouthpiece receiver manufactured by A company. Under such circumstances, the depth of the mouthpiece receiver into which the mouthpiece is fitted is not constant. Even with the mouthpiece and mouthpiece receiver of the same maker, there unavoidably occur variations at the present time within the fabricating tolerance due to the mass production system so that as described above, the mouthpiece receivers thus produced do not, as a rule, have an identical depth into which the mouthpiece is to be fitted.

On the other hand, insofar as music is played by producing sounds, it is deemed sufficient if the mouthpiece is held sufficiently firmly for this purpose. Consequently, the manufactures of brass musical instrument are not much concerned with the positional relationships between the mouthpiece and mouthpipe. Thus they carry out the design and fabrication of these instruments in such a manner that there is always found a gap *b* between the mouthpiece and mouthpipe.

However, the inventor who has conducted studies on the improvement of sounds produced by brass musical instruments has discovered that the aforementioned gap *b* is one of the major causes of deteriorating the sounds of brass musical instruments. The degradation of these sounds seems to result from the turbulence of air caused by the gap and the resultant discontinuous transmission of vibrations through the pipe body of the instrument.

It is accordingly the primary object of the present invention to eliminate the aforementioned drawbacks and provide a mouthpiece receiver which can receive mouthpieces, regardless of the type, without leaving any gap between the bottom or innermost end of the mouthpiece and the rear end of the mouthpipe.

Referring now to the appended drawings, particularly to FIG. 3 the reference numeral 1 represents a mouthpiece having a tapered portion 2 forming the shank thereof, and 3 a mouthpipe. The mouthpiece receiver consists of a first member 4 which comprises an integrally formed screwed portion 5 extending toward the rear end of the mouthpiece receiver and a second member 6 engaging with the first member by means of a screw. The screw 8 provided on the inner circumferential wall of the screwed portion 5 engages with the screw 7 threaded on the outer circumferential wall of the second member.

The second member 6 has a tapered bore 9 to fit in with the tapered portion 2 of the mouthpiece 1. The length of this tapered bore 9 is such thta when the mouthpiece 1 is introduced into the tapered bore 9 the innermost end of the mouthpiece 1 slightly sticks out of the innermost end of the second member 6, or preferably is aligned therewith.

First, the second member 6 is usually threaded into the screwed portion 5 of the first member 4. When the mouthpiece is fitted into the mouthpiece receiver, the second member 6 is drawn out of the screwed portion 5 to an appropriate extent.

Then the tapered portion 2 of the mouthpiece 1 is inserted into the tapered bore 9 of the second member 6 for firm engagement. Under such condition, the second member 6 is screwed into the first member along with the mouthpiece 1, and the screwing in of the second member 6 is stopped when the innermost end of the mouthpiece 1 touches the rear end of the mouthpipe 3. Then the lock nut is tightened so as to prevent the engagement between the first and second members from being loosened and completely secure them in place.

FIG. 4 shows another embodiment of the present invention.

In this case the second member 6' of the mouthpiece receiver comprises an integrally formed screwed portion 11 which is extended toward the forward end of the receiver.

On the other hand, the first member 4' does not have a rearward extended screwed portion 5 as shown in FIG. 3, but is provided with a screw 8' on its own outer circumferential wall. The screw 7' provided on the inner circumferential wall of the screwed portion 11 engages with the screw 8' of the first member 4'. The tapered bore 9 perforated in the second member 6' has such length that when the mouthpiece 1 is inserted into the bore 9 the innermost end of the mouthpiece 1 slightly sticks out of the innermost end of the tapered bore 9.

And the screwed portion 11 of the second member 6' is engaged with the first member 4' brazed to the mouthpipe 3, so that if the second member 6' is rotated either way in relation of the first member 4' the second member 6' will be carried outwardly or inwardly in a lengthwise direction with respect to the first member 4'. Before the mouthpiece 1 is fitted, the second member 6' is transferred from the first member 4' toward the rear end of the mouthpiece receiver to an appropriate extent, and under such condition the tapered portion 2 of the mouthpiece 1 is inserted into the tapered bore 9 of the second member 6' for firm engagement. Next the second member 6' is screwed into the first member 4' along with the mouthpiece 1. The screwing in of the second member 6' is stopped when the innermost end of the mouthpiece touches the rear end of the mouthpipe 3. The lock nut 10 is tightened to prevent the engagement be-

tween the first member **4'** and the second member **6'** from being loosened and completely secure them in place.

FIG. 5 shows still another embodiment where the lock nut **10** is eliminated. This embodiment has approximately the same construction as that shown in FIG. 3. In this case, it is required to screw the second member **6** fully into the first member **4** and bring the innermost end of the mouthpiece **1** and the rear end of the mouthpipe **3** exactly into close contact with each other under the condition where the tapered portion of the mouthpiece **1** is fitted into the tapered bore **9** of the second member **6**. To this end, several kinds of the second members **6** having slightly different diameters of the tapered bore **9** are provided, and from among these second members there is selected for using one which has a tapered bore to permit the mouthpiece to be inserted to exactly abut against the rear end of the mouthpipe.

According to the present invention as described above, the second member of the mouthpiece receiver to be engaged with the mouthpiece is screwed into the first member thereof and the position of the second member has been made adjustable with respect to the first member in the longitudinal direction of the mouthpiece receiver. Since the innermost end of the mouthpiece is always kept in close contact wtih the rear end of the mouthpipe, musical instruments can be played under the best condition in terms of sounds, thus improving the quality of sounds produced. Also where a new mouthpiece is to be used, it can be set in the most desirable position. Further, the same mouthpiece is subject to wear by long use, causing loose fitting, or the commonly-known clattering, but even in such case the mouthpiece can be easily restored to the most suitable condition. Thus the present invention enables the musical instrument to display its highest performance, namely, to be played easily with good tone quality and articulate sounds.

What is claimed is:

1. A mouthpiece receiver of brass musical instruments comprising a first member brazed to a mouthpipe and having a threaded screw portion, and a second member having a tapered bore to receive a mouthpiece as well as a threaded screw portion interlocking with the screw portion of the first member, said tapered bore being adapted for guidingly inserting the mouthpiece thereinto in the longitudinal direction of the mouthpiece receiver until the front end of the mouthpiece abuts the rear end of the mouthpipe.

References Cited

UNITED STATES PATENTS

1,463,631	11/1922	Hurtt	84—399

FOREIGN PATENTS

378,157	8/1907	France.	

RICHARD B. WILKINSON, Primary Examiner

J. F. GONZALES, Assistant Examiner