United States Patent [19]

Camic

[11] **3,925,704**

[45] **Dec. 9, 1975**

[54] **LIGHTING SYSTEM WITH VARIABLE FLASHING RATE**

[75] Inventor: **Donald L. Camic**, Granada Hills, Calif.

[73] Assignee: **Hughey and Phillips, Inc.**, Burbank, Calif.

[22] Filed: **Oct. 24, 1974**

[21] Appl. No.: **517,601**

[52] **U.S. Cl.** ..... **315/200 A**; 315/201; 315/241 S; 315/315; 315/317; 315/360; 340/26; 340/82

[51] **Int. Cl.**[2] **G08G 5/00**

[58] **Field of Search** ..... 315/200 A, 201, 241 S, 315/314, 315, 317, 360; 307/223 R; 340/26, 77, 82, 331, 332, 341; 328/62, 75

[56] **References Cited**

UNITED STATES PATENTS

3,488,558 1/1970 Grafton ..... 315/360 X

Primary Examiner—James B. Mullins
Attorney, Agent, or Firm—Bruce L. Birchard

[57] **ABSTRACT**

A novel flashing light system for use on airport runways, or the like, is provided in which variable flashing rates for the lamps in the system are achieved with the use of an all-solid-state master timer. Particular circuits, including integrated digital count down circuits, which may be used to supply pulses to the lights in the system at selectable rates, are provided. In addition, the transient-sensitive semiconductor circuits which generate the control pulses are isolated from the lines which feed trigger pulses to the power supplies for the respective strobe lights, such isolation being accomplished by reed relays, optical couplers, or the like.

17 Claims, 5 Drawing Figures

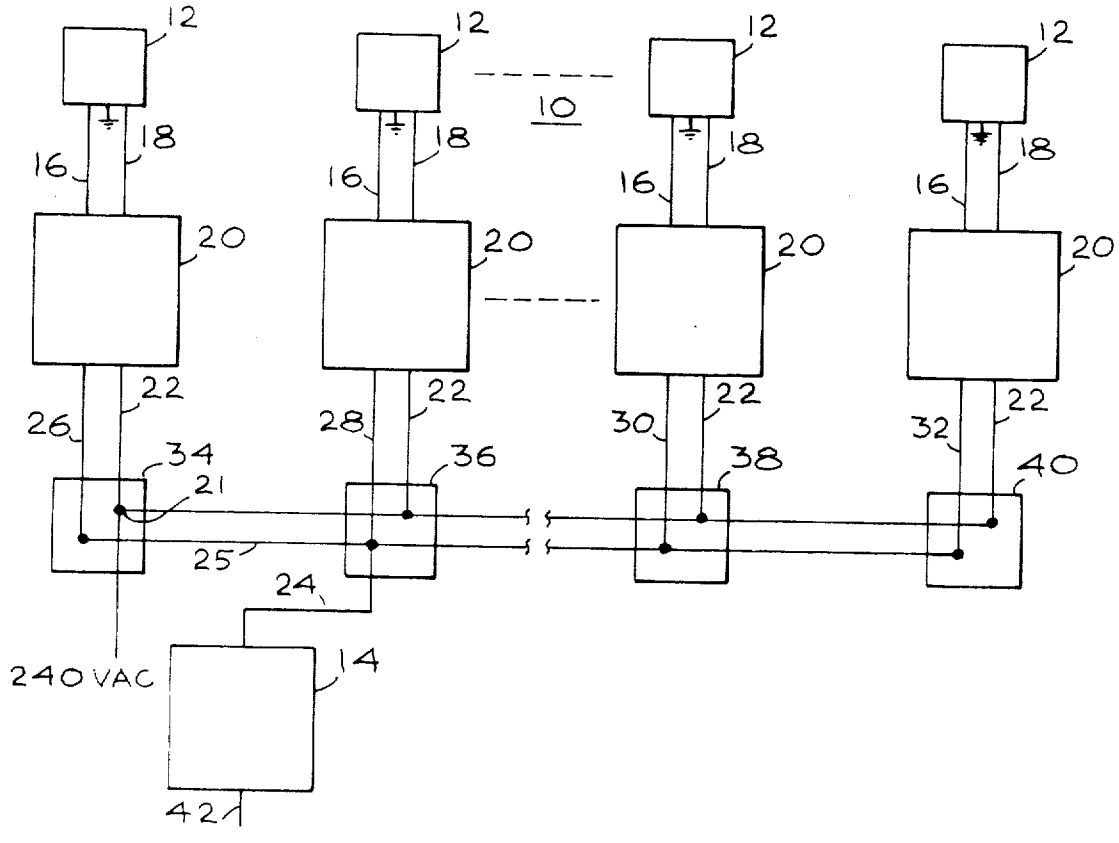

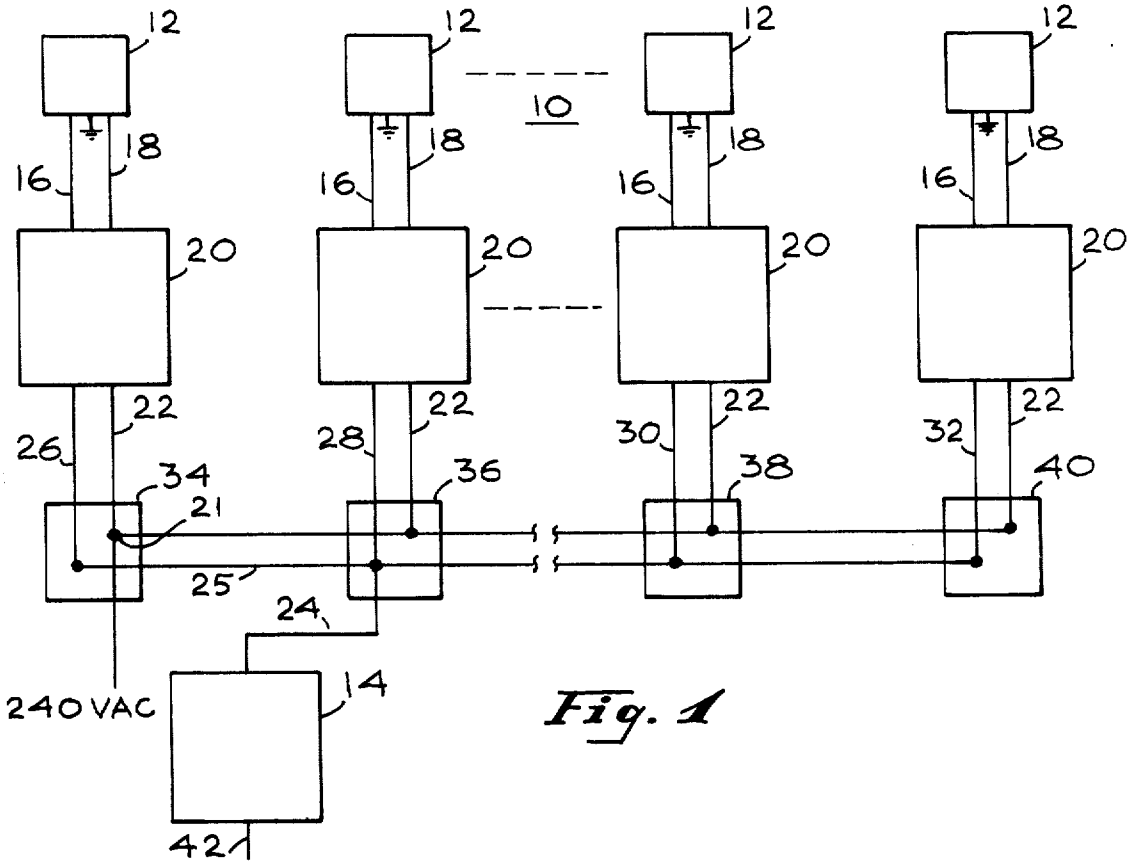
12
10
18
16
20
22
26
28
30
32
34
36
38
40
21
25
24
14
240 VAC
42

Fig. 1

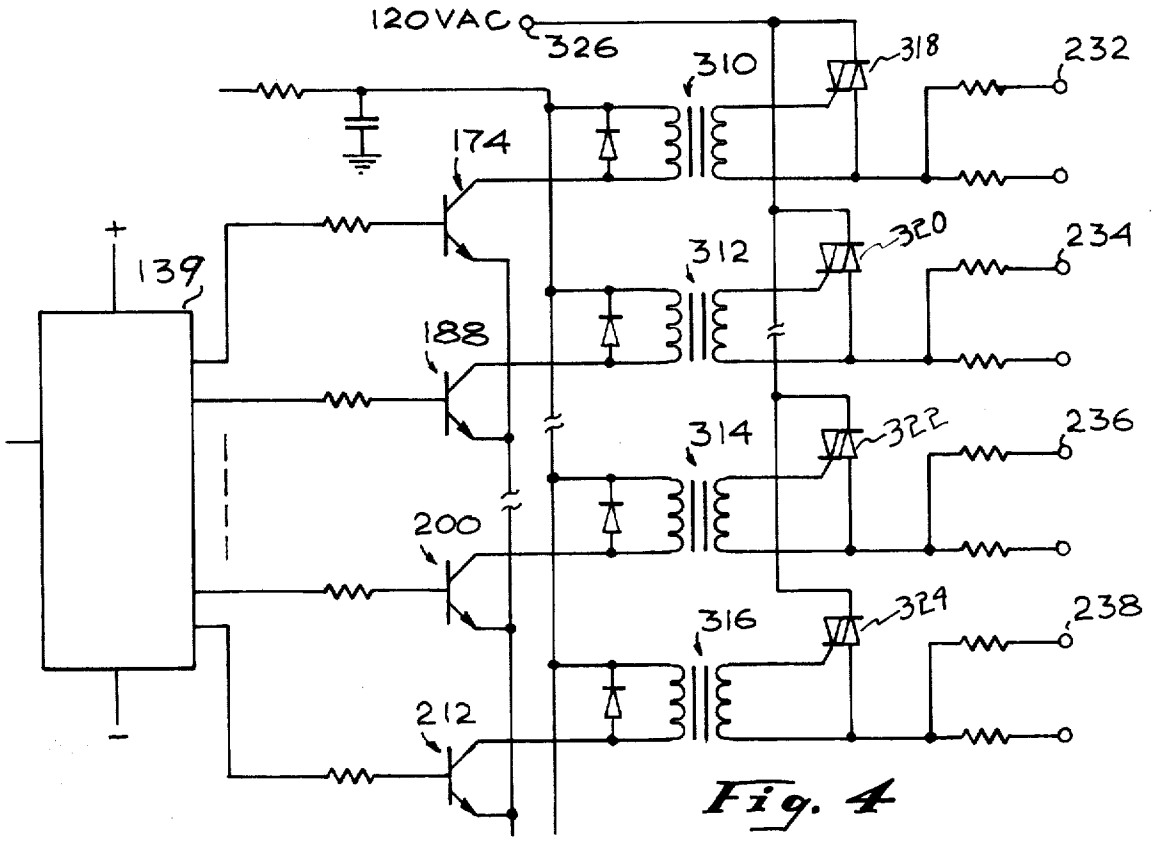
120 VAC
326
310
318
232
174
320
234
312
139
188
314
322
236
200
316
329
238
212

Fig. 4

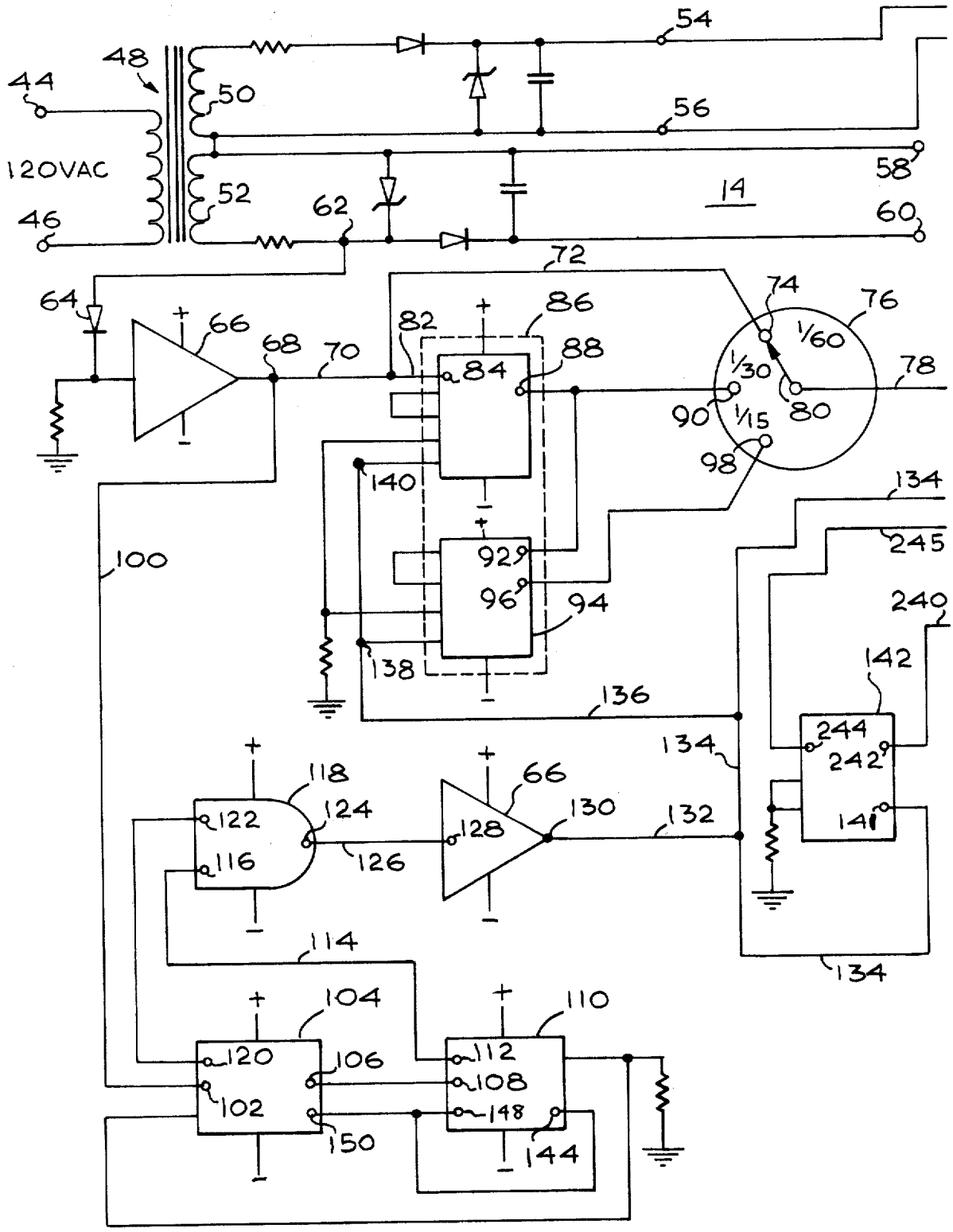
54
48
44
50
56
120VAC
58
14
52
62
46
60
72
64
66
68
70
82
86
74
76
1/60
88
84
1/30
78
90
1/15
80
98
140
134
100
92
245
96
94
240
142
138
136
244
134
242
118
66
122
124
128
130
132
116
126
141
114
134
104
110
120
106
112
102
108
148
150
144

Fig. 2A

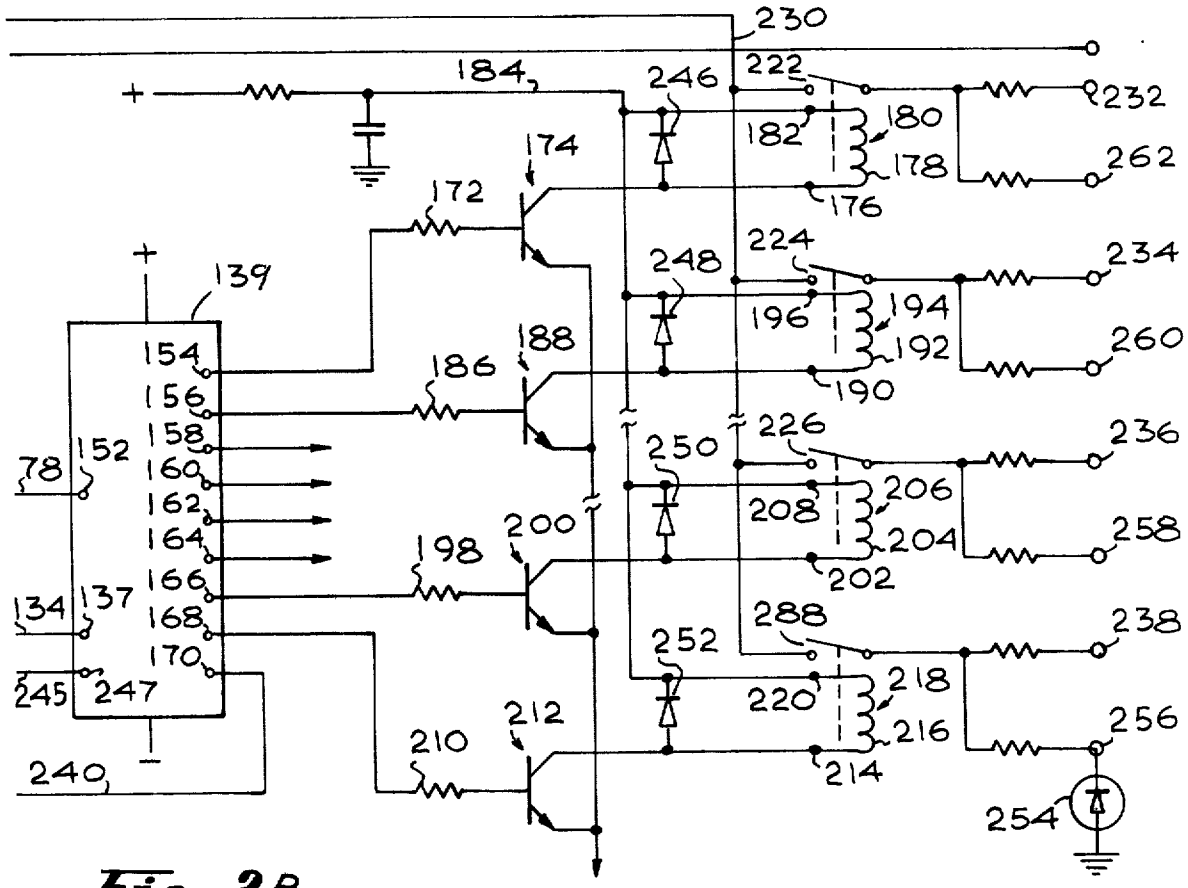
230
184
246
222
232
182
180
178
262
176
174
172
139
248
224
234
196
194
192
260
190
188
186
154
156
158
160
162
164
166
168
170
152
78
134
137
245
247
240
250
226
236
208
206
204
258
202
198
200
252
288
238
220
218
216
256
214
212
210
254

Fig. 2B

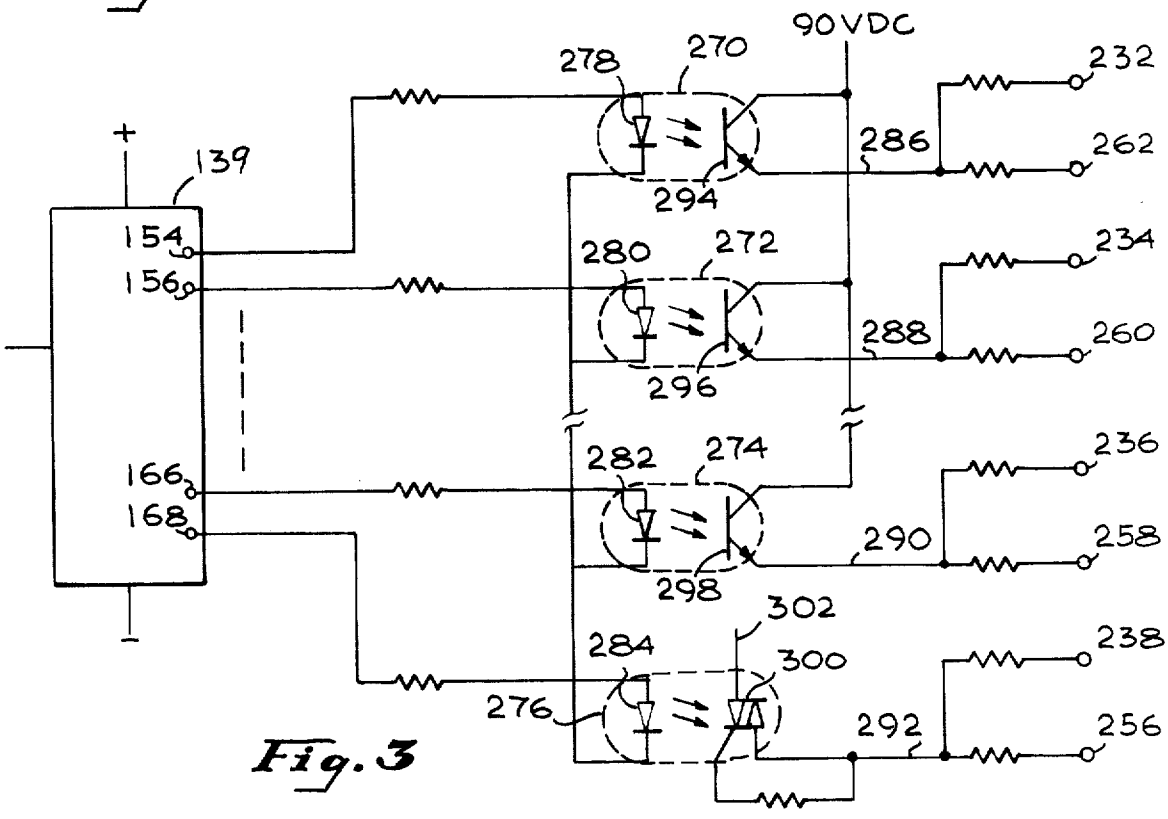
90VDC
278
270
232
286
262
294
139
154
156
280
272
234
288
260
296
166
168
282
274
236
290
258
298
302
284
300
238
276
292
256

Fig. 3

LIGHTING SYSTEM WITH VARIABLE FLASHING RATE

BACKGROUND OF THE INVENTION

1. Field of the Invention

This invention relates to lighting systems in which the lights of the system are flashed in sequence, for example, an airport runway lighting system.

2. Description of the Prior Art

The Federal Aviation Agency of the United States Government (FAA) has long set certain specifications for the lighting of airport runways. This is particularly true at the threshold and the terminus of the runway where a combination of steadily running and flashing lights is specified. The invention herein is particularly related to the flashing lights or strobe lights which are utilized in such applications (although this invention may be applied in other fields). The acronym REIL, which stands for "runway end identifier light", has become widely used in this field to designate any light involved in such systems. Various combinations of steady and flashing lights are specified by the FAA, the particular specification varying with the size and extent of use of the airport. In one configuration a set of REILS provides two flashing lights near the end of the runway, located in line with the runway threshold, 40 feet to each side of the runway edge lights. There is a series of steady lights aligned with each other and with the REILS at the threshold of the runway. In another application the FAA has designated the specifications for an omni-directional lead-in approach lighting system. Such a system consists of seven strobe lights located in the approach area of the runway. Five of these strobe lights are located on the extended runway center line starting 300 feet from the runway landing threshold and being placed at 300 foot intervals up to and including 1500 feet in front of the runway threshold. The remaining two strobe lights are located on the sides of the runway landing threshold. The strobe lights flash in sequence toward the runway at a rate of, in one instance, once per second with the two strobe lights located at the sides of the runway landing threshold flashing simultaneously with each of the lead-in lights.

For different applications, the time lapse between the firing of the strobe lights in a sequence differs. Also, under differing weather conditions the rate of flashing may be varied to achieve optimum viewability by the pilot of an approaching aircraft. In the past, variations in the sequencing rate of successive strobe lights in the lighting system was difficult because the sequential flashing was achieved by electromechanical means. For example, in prior art master timers the sequencing of the strobe lights was achieved by means of cams and metal contacts activated thereby or by means of reed switches actuated by one or more motor-driven permanent magnets. The motor normally utilized was a synchronous motor and its speed was not adjustable to achieve a range of desired sequential flashing rates. Further, there was a normal degradation in the operation of the system with time as a result of the wearing of the moving parts, such as those in the synchronous motor. There were the usual additional problems caused by heat generated by the synchronous motor and its associated circuits.

None of the prior art known to applicant provides the flexibility, compactness and reliability which has been achieved by applicant's invention.

Accordingly, it is a general object of the present invention to provide an improved lighting system with sequentially flashed lights.

It is a further object of the present invention to provide an airport runway approach lighting system capable of performing the desired functions involved in approach lighting in an improved and efficient manner.

It is a more specific object of the present invention to provide an airport runway approach lighting system and apparatus therefore having improved flexibility and reliability.

SUMMARY OF THE INVENTION

In brief, apparatus in accordance with the present invention derives timing pulses from the power line (which for the purposes of this discussion will be considered to be operating at 60 Hz). The timing pulses at the 60 pulses per second rate are fed to one section of a hex inverter, a commonly available integrated circuit component. The output terminal of the inverter is fed to three additional circuit points. The first of these is the "1/60" position on a selector switch. The second of these points is an input terminal on a dual-D type flip flop which divides the pulse rate by two at one of its output terminals and by four at a second of its output terminals. The first of its output terminals is connected to the "1/30" position on a selector switch and the second output terminal is connected to the "1/15" position on that same selector switch. That selector switch permits the choice of a desired sequential flashing interval.

The third output path from the hex inverter section goes to a decade counter dividing circuit which divides the pulse rate by 30 and produces a reset pulse for the main decade counter. As a result the strobe light flashing sequence is commenced two times per second. As has been indicated, the control of the time interval between the firing of successive strobe lights in a sequence may be selected by a selector switch. The output of the selector switch is fed to the main decade counter which provides output pulses, in sequence, at each of its output terminals, the number of those output terminals corresponding to the number of lights to be flashed, plus one. Transistorized buffer amplifiers between the output terminals of the decade counter and a respective one of a group of reed relays corresponding in number to the number of strobe lights to be flashed, cause the reed relays to be activated sequentially and those reed relays couple AC or DC trigger pulses to the power supplies of the strobe lights in sequence, causing the strobe lights to be fired. By merely adjusting the selector switch, the time between successive flashes of the sequentially flashed strobe lights can be changed to meet the particular requirements in a given application. Circuits in the master timer automatically generate reset pulses which cause the entire cycle of sequential light energization to be repeated.

BRIEF DESCRIPTION OF THE DRAWINGS

A better understanding of the present invention may be had from a consideration of the following detailed description, taken in conjunction with the accompanying drawings in which:

FIG. 1 is a block diagram showing a system in accordance with the present invention;

FIG. 2 (A & B) is a diagram, partially in schematic form and partially in block form, of one form of the master timer portion of the system of FIG. 1.

FIG. 3 is a diagram, partially in schematic form and partially in block form, showing one form of trigger voltage coupling circuit; and

FIG. 4 is a diagram, partially in block form and partially in schematic form showing an additional circuit for coupling trigger voltages to lamps to be flashed.

DESCRIPTION OF THE PREFERRED EMBODIMENT

In FIG. **1**, a variable flash rate lighting system **10** includes a plurality of Xenon flash lamp heads **12**, each flash lamp head including a Xenon flash lamp, a step-up pulse transformer and a condenser discharge circuit coupled to the primary of the pulse transformer, all of which are not shown because they are well known in the art. The DC current for charging the condenser is provided through a conductor **18** from a combination control box and power supply **20**. A conductor **16** provides a selected trigger pulse from each control box **20** to its associated flash lamp head **12**. Each control box-power supply **20** includes a selector switch, not shown, which makes it possible to choose which of eight trigger pulses, for example, from master timer **14** is chosen to fire the flash lamp associated with a respective control box **20**. As a result, the sequence of flashing of the respective lamps can be changed to provide any desired order. The respective conductors **16** may carry control pulses of 90 volt amplitude, for example, with the voltage applied to the Xenon lamps in the respective heads **12** approximating 30,000 volts. Operating voltage for each control box-power supply **20** is derived from a power line source, such as a 240 VAC power line, through terminals **21** and a pair of conductors represented by a cable **22** feeding each power supply **20**. The master timer **14** supplies sequenced trigger pulses through a multiple-wire cable **24**, a multiple-wire bus **25** and a plurality of control pulse cables **26, 28, 30** and **32** which are fed from the bus **25** out of a plurality of junction boxes **34, 36, 38** and **40** and, in turn, feed respective ones of the control-box-power supplies **20**. Operating power for the master timer **14** may be derived from a 120 volt or 240 volt AC line source through a power cable **42**.

The heart of the lighting system according to this invention is in the master timer **14** which eliminates the inflexible and relatively unreliable electromechanical sequencing systems of the prior art. The details of the master timer **14** are set forth in FIG. **2** (A & B). In FIG. **2** (A & B), operating AC power for the master timer **14** is supplied through a pair of terminals **44** and **46**. For example, this may be 120 volts AC. That power is supplied through a power transformer **48** which has a pair of secondary windings **50** and **52**. The AC voltage appearing across the secondary **50** is rectified in conventional fashion to provide an output voltage approximating 120 volts DC at a pair of terminals **54** and **56**. The output voltage appearing across the secondary **52** is rectified in conventional fashion and provides the positive operating voltage appearing at a terminal **60**. A terminal **58** is at ground potential with respect to the terminal **60** and the terminal **54**. The AC voltage appearing at a terminal **62** is coupled through a diode **64** into a first inverter section of a hex inverter **66**. The hex inverter **66** is an integrated circuit having six inverters on a single chip. The effect of diode **64** is to pass only the positive half of the sine wave voltage supplied to it, as a result of which timing pulses at **60** pulses per second are supplied to the first inverter section in hex inverter **66**. The output signal from the first section of inverter **66** appears at a terminal **68**. That signal appearing at the terminal **68** is coupled to three other points in the circuit of master timer **14**. First, the output signal appearing at the terminal **68** is fed through a conductor **70** and a conductor **72** to a first terminal **74** of a selector switch **76**, that selector switch **76** permitting a selection of the time between sequential flashes of the successive strobe lights in the approach lighting system. Output signals from the selector switch **76** appear on an output line **78**. The time between successive pulses on the output line **78** when a switching arm **80** is in contact with the terminal **74** is 1/60 of a second. Output signals from the terminal **68** are also fed through the conductor **70** and a conductor **82** to a terminal **84** of an integrated circuit **86** known in the trade as a "dual D" type of flip flop. At an output terminal **88** of dual D flip flop **86**, output pulses are produced at a pulse rate which is one-half of the pulse rate of the signal applied to the terminal **84**. That is, pulses appear at the terminal **88** every 1/30 of a second. Those pulses at 1/30 of a second pulse rate are fed from the output terminal **88** to a second terminal **90** of the selector switch **76**. The pulses appearing at the output terminal **88** are also fed to a terminal **92** of a second flip flop section **94** in the dual D flip flop **86**. As a result of the flip flop action of the second section **94**, output pulses appear at an output terminal **96** at a separation of 1/15 of a second. Those pulses at 1/15 of a second spacing are fed from the output terminal **96** to a third terminal **98** of the selector switch **76**.

The third path for output pulses from the first section of the hex inverter **66** is from the output terminal **68** through a conductor **100** to a terminal **102** of a decade counter **104** which divides the number of pulses per second appearing at output terminal **68** by a factor of ten and produces an output pulse train at a rate of six pulses per second at a terminal **106** of the decade counter **104**. The pulses at six pulses per second are fed from the output terminal **106** to an input terminal **108** of a second decade counter **110**, the function of which is to divide its input pulse rate by three, thus producing an output pulse two times per second at an output terminal **112**. The output pulse from the output terminal **112** is fed through a conductor **114** to an input terminal **116** of a positive NAND gate **118**. Similarly, a pulse is taken from an output terminal **120** of the decade counter **104** and fed to an input terminal **122** of the NAND gate **118**. Output pulses from the NAND gate **118** are taken from a terminal **124** and fed by way of a conductor **126** to an input terminal **128** of a second portion of hex inverter **66** at an output terminal **130** of which a reset pulse is derived and fed via a conductor **132**, a conductor **134** and a conductor **136** to a pair of reset terminals **138** and **140** on the dual D type flip flop integrated circuit **86**. That same reset pulse from the output terminal **130** is supplied by the conductor **134** to a reset terminal **141** of a flip flop **142**. It should be noted that the "divide by 30" circuit made up of the decade counters **104** and **110** resets itself by reason of an output pulse taken from an output terminal **144** on the decade counter **110**, that output pulse being fed by way of a conductor **146** to a reset terminal **148** on the decade counter **110** and a reset terminal **150** on the decade counter **104**.

As has been indicated, the selector switch **76** determines the sequential interval for the strobe lights in the system. When the switch arm **80** is in contact with the

terminal **74**, as shown, pulses at the rate of **60** pulses per second are fed through the conductor **78** to an input terminal **152** of the decade counter **139**. Output pulses in sequence, occur at a plurality of output terminals **154, 156, 158, 160, 162, 164, 166, 168** and **170**. The output pulses appearing at the first eight of those terminals (being eight sequential pulses spaced by 1/60 of a second) are fed to buffer transistors as will be described hereinafter. For purposes of clarity, only four of the eight buffer transistors and subsequent circuits are shown in FIG. **2**. The buffer circuits and the circuits which follow are identical in configuration. This limitation in number to four buffer transistors and circuits following those transistors corresponds to the limitation in FIG. **1** of the number of strobe lights and power supplies to four, although the actual system contemplated herein was designed for eight strobe lights. It should be understood that the circuits following the output terminals **158, 160, 162** and **164** are identical with the circuits shown following the output terminals **154, 156, 168** and **170**.

The output pulse from the terminal **154** is fed through a current limiting resistor **172** to the base of a buffer transistor **174** the collector of which is connected to one terminal **176** of a coil **178** in a reed relay **180**. A second terminal **182** of the coil **178** in the reed relay **180** is connected to a positive voltage bus **184**. Similarly, the output terminal **156** is coupled through a current limiting resistor **186** to the base of a buffer transistor **188** the collector of which is connected to a terminal **190** on a coil **192** of a second reed relay **194**. A remaining terminal **196** of the coil **192** is connected to the positive voltage bus **184**. The terminal **166** is coupled through a current limiting resistor **198** to the base of a transistor **200**, the collector of which is coupled to a terminal **202** of a coil **204** in a reed relay **206**. A remaining terminal **208** of the coil **204** is coupled to the positive voltage bus **184**. The output terminal **168** is coupled through a current limiting resistor **210** to the base of a buffer transistor **212** the collector of which is connected to a terminal **214** on a coil **216** of a reed relay **218**. A remaining terminal **220** of the coil **216** is coupled to the positive voltage bus **184**. The output pulses appearing at the terminals **154-168** are positive in polarity and as each of these pulses is provided, in sequence, to its associated buffer transistor, for example transistors **174, 188, 200** and **212**, each of these transistors saturates momentarily and, as a result, the collector of each of the transistors is brought to within a few hundred millivolts of ground potential with the result that current flows, in sequence, through the successive reed relay coils **178, 192, 204** and **216**, for example. When that current flow occurs in the relay coils the respective contacts **222, 224, 226** and **228**, for example, close momentarily permitting current from a trigger voltage line **230** to flow, in sequence, for the period of the closure to a plurality of pulse output terminals **232, 234, 236** and **238**.

The ninth pulse from the decade counter **139** is taken from the output terminal **170** and coupled through a connector **240** to an input terminal **242** on the flip flop **142**. The appearance of the ninth pulse from the decade counter **138** at the input terminal **242** causes the flip flop **142** to produce, at an output terminal **244**, a positive voltage which is coupled through a connector **245** to an input terminal **247** on the decade counter **139**. That positive voltage at the terminal **247** stops or inhibits the counting by decade counter **138** until a reset pulse arrives at the terminal **137** of counter **139**. As has been indicated, the reset pulse also resets the flip flop **142** and the dual flip flop **86**. A plurality of diodes **246, 248, 250** and **252** prevent voltage transients from appearing on the low voltage bus **184** as a result of the closure of the trigger-pulse-carrying contacts in the reed relays.

An indicator, such as an LED **254** may be connected to each of a plurality of terminals **256, 258, 260** and **262** and the corresponding terminals of any remaining strobe light triggering circuits in the system to indicate that each of the strobe light power supplies is receiving a trigger pulse from the master timer **14**.

In some applications it may be desirable to replace the reed relays with electronic circuits for coupling pulses out of the master timer **14** to the strobe lamp ignition circuits to be controlled. FIG. **3** represents one such circuit including a variation. In FIG. **3**, output signals from terminals **154, 156, 166** and **168** of decade counter **139** pass to opto-isolators **270, 272, 274** and **276**, and any additional opto-isolators required for the numbers of trigger pulses generated, in this case eight. As the trigger pulses excite the light-emitting diode portions **278, 280, 282** and **284** of the opto-isolators output pulses appear on connectors **286, 288, 290** and **292**, respectively because of the light-to-electrical energy conversion by elements **294, 296, 298** and **300** of the isolators. Isolator **276** differs from isolators **270, 272** and **274** in that it incorporates a triac section including element **300** and has an AC potential applied to the triac section through conductor **302**. As a result isolator **276** puts out an AC pulse on connector **292** as contrasted with the DC pulses appearing on conductors **286, 288** and **290**.

In FIG. **4** an additional method for achieving AC pulse output with electrical isolation from the decade counter **139** is shown. Pulse transformers **310, 312, 314** and **316** apply pulses from counter **139**, as amplified by drivers **174, 188, 200** and **212**, to triacs **318, 320, 322** and **324**, respectively, which results in the gating of AC pulses from terminal **326** to output terminals **232, 234, 236** and **238**, respectively. These pulses are available as trigger pulses for the lamp ignition circuits in lamp heads **12**.

Although there has been described hereinbefore a particular circuit for a lighting system with variable flashing rate in accordance with this invention for the purpose of illustrating in a manner in which the invention may be used to advantage, it will be appreciated that the invention is not limited thereto. Accordingly, any and all modifications, variations or equivalent arrangements which may occur to those skilled in the art should be considered to be within the scope of the invention as defined in the appended claims.

What is claimed is:

1. A lighting system with variable flashing rate, said system including:

at least one strobe light;

a triggerable ignition circuit coupled to said strobe light: and

a master timer coupled to said ignition circuit, said timer including:

a trigger-control-signal input terminal adapted for the application of a trigger control signal thereto;

at least one trigger-signal-output terminal;

a first source of pulses at a rate corresponding to the frequency of a master source;

a second source of pulses at $1/n$ of the rate of pulses from said first pulse source;

a third source of pulses at $1/2n$ of the rate of pulses from said first pulse source;

selector switch means having an output terminal and having a plurality of fixed contacts connected, respectively, to said first source of pulses, said second source of pulses and said third source of pulses and having a switch arm movable, selectively, to each of said fixed contacts for providing, at the output terminal of said selector switch, pulses at a rate corresponding to the rate of the pulses at the fixed contact to which the switch arm is selectively moved;

a first decade counter having input and output terminals, one of said input terminals being coupled to said output terminal of said selector switch to receive pulses therefrom at a rate selected by the positioning of said switch arm with respect to said fixed contacts, said output terminals of said first decade counter having thereon, in sequence, pulses spaced in time according to the position of said switch arm in said selector switch; and

switching means coupled to said output terminals of said first decade counter and responsive to the sequential pulses therefrom to produce at said at least one trigger-signal-output terminal trigger-signals, in sequence.

2. Apparatus according to claim **1** in which said switching means includes a plurality of transistors each driving a respective reed relay.

3. Apparatus according to claim **1** which includes, in addition, means for resetting said first decade counter at the conclusion of a predetermined number of counts thereby.

4. Apparatus according to claim **3** in which said predetermined number of counts is eight.

5. Apparatus according to claim **1** in which said means for providing pulses at $1/n$ and $1/2n$ of the line rate includes a dual D flip flop.

6. Apparatus according to claim **3** in which said means for resetting said first decade counter includes means for dividing said line pulse rate by 30.

7. Apparatus according to claim **6** in which said means for dividing said line pulse rate by 30 includes at least one additional decade counter.

8. Apparatus according to claim **3** which includes, in addition, means for inhibiting the counting of the first decade counter beyond a predetermined count, said inhibiting means being coupled between an output terminal and an inhibiting terminal of said first decade counter.

9. Apparatus according to claim **8** in which said inhibiting means includes a flip flop.

10. Apparatus according to claim **9** in which said inhibiting means is coupled to said means for resetting said first decade counter.

11. Apparatus according to claim **1** in which said master source is the local power line.

12. Apparatus according to claim **1** in which said switching means includes opto-isolators.

13. Apparatus according to claim **1** in which said switching means includes at least one triac.

14. Apparatus according to claim **1** in which said trigger signals are AC pulses.

15. Apparatus according to claim **1** in which said trigger signals are DC pulses.

16. Apparatus according to claim **1** in which n equals two.

17. A lighting system with variable flashing rate, said system including:

at least one strobe light;

a triggerable ignition circuit coupled to said strobe light; and

a master timer coupled to said ignition circuit, said timer including;

a trigger-control-signal input terminal adapted for the application of a trigger control signal thereto;

at least one trigger-signal-output terminal;

a first source of pulses at a rate corresponding to the frequency of a master source;

a second source of pulses at $1/n$ of the rate of pulses from said first pulse source;

selector switch means having an output terminal and having a plurality of fixed contacts connected, respectively, to said first source of pulses and said second source of pulses having a switch arm movable, selectively, to each of said fixed contacts for providing, at the output terminal of said selector switch, pulses at a rate corresponding to the rate of the pulses at the fixed contact to which the switch arm is selectively moved;

a first decade counter having input and output terminals, one of said input terminals being coupled to said output terminal of said selector switch to receive pulses therefrom at a rate selected by the positioning of said switch arm with respect to said fixed contacts, said output terminals of said first decade counter having thereon, in sequence, pulses spaced in time according to the position of said switch arm in said selector switch; and

switching means coupled to said output terminals of said first decade counter and responsive to the sequential pulses therefrom to produce at said at least one trigger-signal-output terminal trigger-signals, in sequence.

* * * * *