Nov. 15, 1932. M. L. CRUM 1,887,951

KEY FASTENER

Filed Nov. 4, 1929 2 Sheets-Sheet 1

FIG. 1

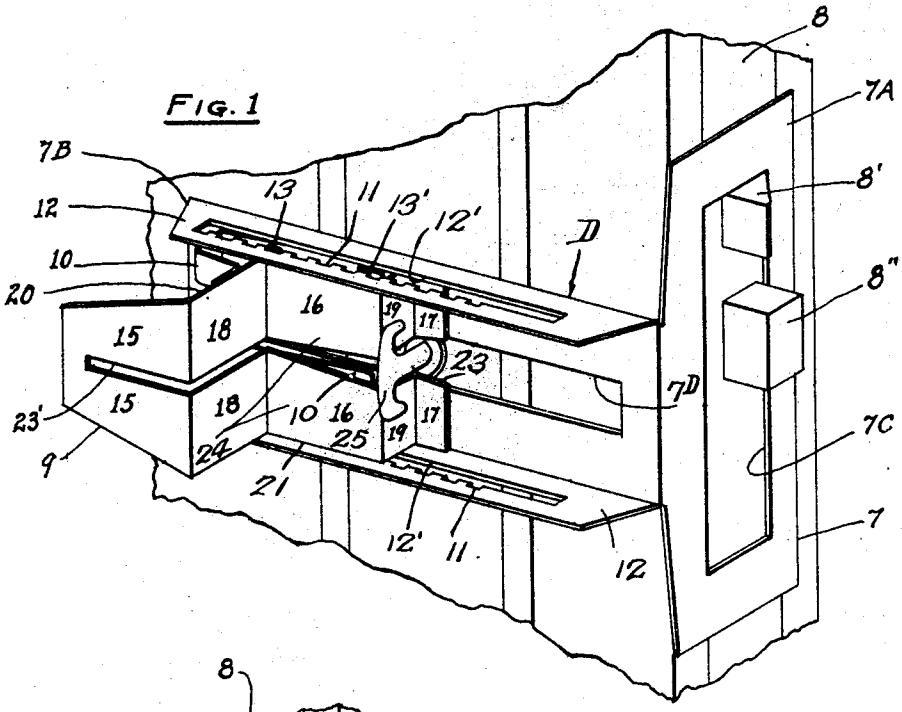

FIG. 2

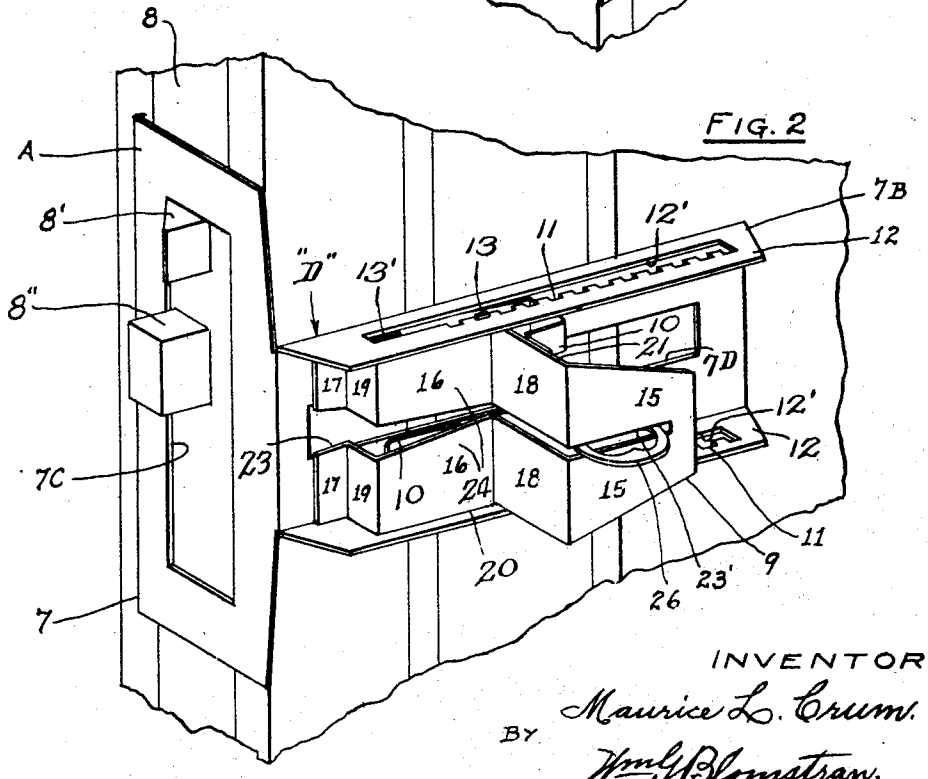

INVENTOR

Maurice L. Crum.

BY Wm. G. Blomstrom.

ATTORNEY.

Nov. 15, 1932. M. L. CRUM 1,887,951

KEY FASTENER

Filed Nov. 4, 1929 2 Sheets-Sheet 2

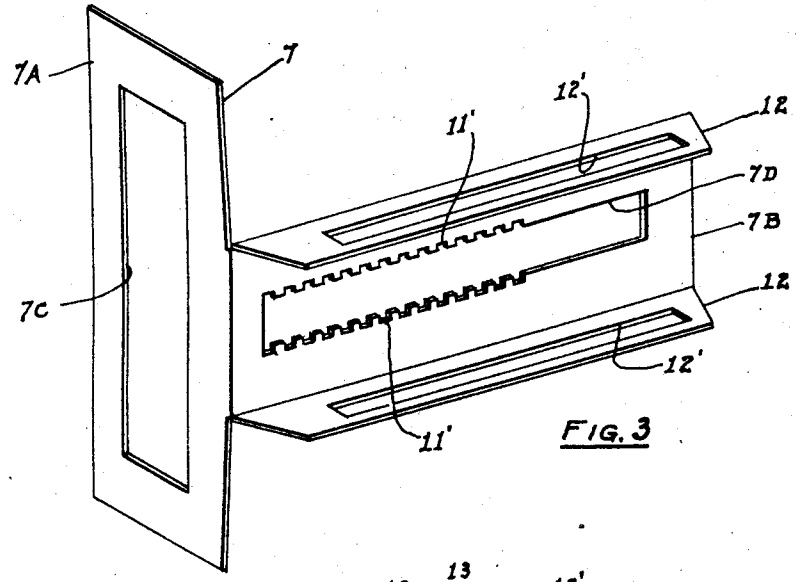

FIG. 3

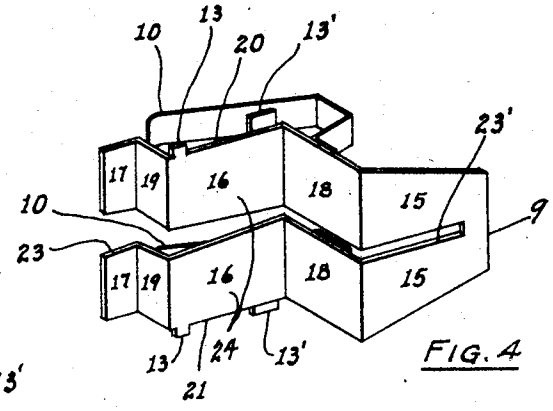

FIG. 4

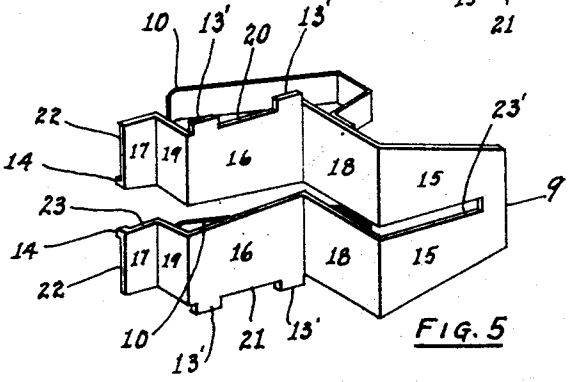

FIG. 5

INVENTOR
Maurice L. Crum.
BY
Wm. G. Bomstrau.
ATTORNEY.

Patented Nov. 15, 1932 1,887,951

UNITED STATES PATENT OFFICE

MAURICE L. CRUM, OF CHICAGO, ILLINOIS

KEY FASTENER

Application filed November 4, 1929. Serial No. 404,696.

This invention relates in general to fasteners for keys when arranged in a locking position in door locks installed in doors, but more particularly it has reference to a key locking device which will provide against a door locking key being turned to unlock a door from the side opposite to which a key may have been inserted.

An important object of my invention contemplates the provision of a key fastening device which, when installed in a key fastening position and over the lock bar of a lock when projecting from a door to hold the door locked, cannot be displaced from its key fastening position when the door is closed and locked.

Another important object of my invention contemplates the provision of a key fastening device which will positively prevent the door fastening key and the lock bar from being forced from their locked position from the outside of a locked closed door.

Another important object of my invention contemplates the provision of a key fastening device which will positively prevent a door from being unlocked from outside of the door, or of even the key being turned around so that it may be pushed out of its location with a view of replacing it with a skeleton key from outside the door.

Another important object of my invention contemplates the provision of a key fastening device which will be supported in its key fastening position when a portion of the device is arranged over the locking bars of a door lock, and between the door lock and a lock plate as are installed in a door and its door frame.

Further, another important object of my invention contemplates the provision of a key fastening device which may be installed in its key fastening position without the necessity of resorting to screws or nails, or similar devices for fastening the device in place.

A further object of the invention is to provide a key fastening device which may be readily installed in its key fastening position without the necessity of having to fasten it in place by means of screws, and without any danger of marring or defacing the door and the door frame in the least.

A further object of the invention is the provision of a key fastening device, which, as a unit, may be readily and quickly installed in its key fastening position, and, as readily and quickly removed from its installed position after it and the door have been unlocked, from the inside only, and the door is in its opened position.

A further object of the invention is the provision of a key fastening device, which will be neat and have a pleasing appearance, yet be strong and substantial, and which may be produced at, comparatively, a very small cost.

These and other objects of my invention will be better understood by referring to the accompanying drawings, and will be more fully described in the following specification, and more particularly pointed out in the appended claims.

In the several illustrations, Figure 1 is a perspective view showing my invention as installed in a key locking position in connection with locks having a thumb turn key; the key may be in a horizontal position, instead of as shown; only a portion of a door is shown, the door frame being omitted;

Fig. 2 is a perspective view showing my invention as installed in a key locking position in connection with locks requiring keys of the ordinary familiar type;

Fig. 3 is a detail view in perspective, and shows a modified form of that portion of the invention which fits around the corner of a door, as is indicated in Fig. 1;

Fig. 4 is a detail view in perspective of that portion of the invention, or sliding key locking member, which slideably engages said stationary member; and Fig. 5 is a similar view to that of Fig. 4, and shows a modified form of the sliding key locking member.

Similar characters refer to similar parts throughout the several views.

To illustrate my invention, I have shown in the drawings, a bent plate 7, arranged around the corner of a door at the location of a door lock, indicated by the reference character 8, the manner of arranging being

shown plainly in Figures 1 and 2. A manually operated key locking member 9, is provided, and is slideably arranged in a channel portion formed on said plate 7, said member 9, being provided with operating springs 10, which provide means for maintaining said member 9 in a locked position in notches 11, or 11′, when the same is not being manually operated. Said springs 10 may be fastened to member 9, by spot welding, or any other suitable means.

It may be seen by referring to Figures 1, 2, and 3, that bent plate 7 is bent in the form of a right angle, one of the sides providing a long rectangular portion 7A, arranged at right angles to a formed channel shaped portion 7B. The portion 7A, is provided with a long rectangular opening 7C, which may be arranged over lock bars or bolts 8′ and 8″, of a door lock, in the position shown in Figures 1 and 2, or, on the opposite side of a door, depending upon which side the door may be hung. The channel shaped portion 7B, is arranged centrally on one of the long sides of portion 7A, so that, no matter from which side a door may be hung, the key fastening device, indicated generally by the reference character "D", will fit around the corner of a door. Channel shaped portion 7B, is also provided with a long rectangular opening 7D, so as to permit of arranging device "D" in place over either a key which may be permanently fixed in a lock, or, over an ordinary familiar type key. Channel portion 7B, is provided with two slotted flange members 12, having slots 12′. The outer edges of said slots 12′ are provided with previously mentioned notches 11, which are automatically engaged by lugs, or projections, 13, provided on key locking member 9. In the modified form of bent plate 7, the rectangular opening 7D is provided with before mentioned notches 11′. These notches, 11′, are automatically engageable by lugs, or projections 14, provided on a modified form of key locking member 9.

Locking member 9 comprises a plate bent in several places to form three substantially parallel portions 15, 16, and 17, respectively, and two substantially parallel portions 18, and 19, respectively, the portions, 18 and 19, being arranged at, substantially, right angles to portions 15, 16, and 17. On lateral edges 20, and 21, of member 9, and arranged on middle portion 16, are provided a pair of outwardly extending lugs, or projections, 13, and 13′. The lugs 13 are engageable with notches 11, to hold member 9, from being moved while the same is in a key locking position; lugs 13′, however, are not engageable with said notches 11, but, instead, provide a means for maintaining said member 9, in a workable position when sliding same back and forth, and for holding said member 9 in place in the channel shaped portion 7B.

In the modified form of member 9, engaging lugs 14 are provided on edge 22, of portions 17, and arranged so as to be in engagement with said notches 11′.

Member 9 is further provided with a tapering slot 23, which divides said member 9 into similar half portions 24, said slot 23, terminating in a straight narrow slot 23′.

In the assembly of member 9, and channel portion 7B, member 9 is held away from channel portion 7B, by means of said spring 10, so that lugs 13 and 13′ are, respectively, in engagement with notches 11, and the outer or notched edge of slots 12′. And likewise, in the assembly of the modified forms of member 9, and channel portion 7B, said spring 10 forces lug 13′ against the outer edge of slot 12′, and lug 14 in engagement with notches 11′. Said notches 11, not being necessary or provided in the modified form of channel portion 7B.

In the application of a key locking device of the above description, to a key locking position, it will be necessary to first pull member 9 to the outer end of channel portion 7B, before said device "D", may be arranged in place as is indicated in both views, Figures 1 and 2. Also, the door on which said device "D" is to be arranged should be in an opened position while arranging said device "D" in place on a door where, either a permanent type key 25, is in use, or, where an ordinary more familiar type key 26, is being used, and the door closed, before member 9 can be arranged to lockingly engage a key, after it has been turned to a locking position, as indicated in the views, Figures 1 and 2.

If it is desired to open a door from its locked position it will be only necessary to press against member 9, until lugs 13, or lugs 14, as the case may be, are out of engagement with their respective notches, and pull said member 9 out toward the outer end of channel portion 7B, and away from engagement with the door key so that the key may be turned to unlock the door when it may be opened.

Having thus described my invention, it can be readily understood that minor details of my construction may be altered in various ways without departing from the spirit and scope of my invention. Therefore, what is claimed is desired to be secured by Letters Patent.

I claim:

1. In a key fastening device comprising, in combination; a bent plate having a channel shaped portion having notched elongated openings therein, said plate being adapted to be arranged around an inside corner of a door, over a door key and over lock-bars which extend from the door lock and into a lock plate as being arranged in a frame in which the door is hung when the door is in its closed locked position, and a slideable key

fastening means being adapted to be adjustably arrangeable to various positions in said channel shaped portion to a position for preventing the door key from being turned.

2. In a key fastening device comprising, in combination; a bent plate having a channel shaped portion having notched elongated openings therein, said plate being built in the form of a right angle and adapted to be arranged over the door locking bars of a lock and be thereby supported, and means to prevent a key from being turned from its locked position comprising a slideable member arrangeable to a key fastening position in said channel shaped portion.

3. In a key fastening device comprising, in combination; a bent plate having two portions arranged substantially at right angles to each other, one of said portions having means whereby the same may be arranged over projections extending out from the edge of a door from the door lock and be supported thereby when the same is being arranged in a key fastening position on the inside corner of a door, the other of said portions being formed into the shape of a channel and constructed to support a slideable key fastening member, a key fastening member slidably arranged to work in said channel portion to or from engagement with the door key, and springs fastened to said member being adapted to hold said member in a key fastening position.

4. In a key fastening device comprising, in combination, a two member key fastening device comprising a stationary member and a horizontally movable member, said device being adapted to be held in place over the lock bars of a door lock and in a key fastening position, said members being adapted to be relatively engageable with each other to various positions of adjustment to hold a door key from being turned to unlock a door from the outside of a room, and means to prevent said device from being deranged from its operative position from the outside of the door when the same is in its closed locked position.

5. In a key fastening device comprising, in combination; a stationary member comprising two portions bent at right angles to each other, one of said portions being formed in the shape of a channel and having notched openings, a movable member having lugs and slideably arranged in said channel, and springs fastened to said movable member, said springs being adapted to cause said lugs to engage the notches of said channel portion in various positions in said channel.

6. In a key fastening device comprising, in combination; a bent plate, said plate being bent to form two portions at right angles to each other, one of said portions being adapted to be arranged over outstanding door locking bars of a lock and be supported thereby when the same is arranged to fasten and hold the door-key in its locked position, the other of said portions being constructed to form a channel having notched openings therein, and means to prevent a key from being turned from its locked position to unlock a door, or of pushing it out from its location with a view of replacing it with a skeleton key, said means comprising a spring actuated slideable member movable to a key fastening position in said channel shaped portion.

7. In a key fastening device comprising, in combination; a two member key fastening device, one of said members comprising a stiff plate bent to form two portions substantially at right angles to each other, one of said portions being elongated in one direction and having a long rectangular opening therein and suitably arranged centrally lengthwise of and longitudinally parallel with the elongated sides of said elongated portion, the other of said portions being formed centrally and at right angles to one of the long edges of said elongated portion, said central portion being formed in the shape of a channel and having a long rectangular opening formed centrally in the back of said channel and having notches therein, longitudinal slots provided in the flanges of said channel and having notches suitably spaced along the outer edges thereof, a key fastening member being adapted to slide back and forth in said channel portion, said member having lugs being adapted to engage with said notches, and springs arranged between said fastening member and said channel portion being adapted to hold said fastening member in engagement with said notches.

MAURICE L. CRUM.