May 25, 1965 F. E. COYLE ETAL 3,185,868

ACOUSTIC ABSORBER PAD

Filed May 28, 1962

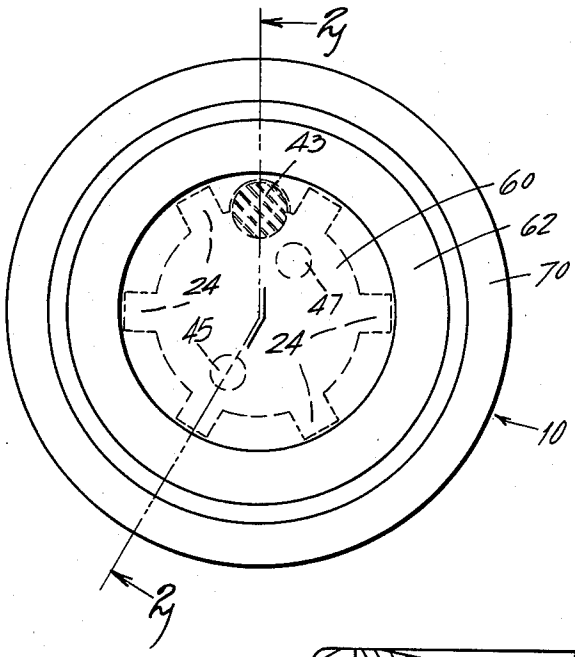

Fig. 1

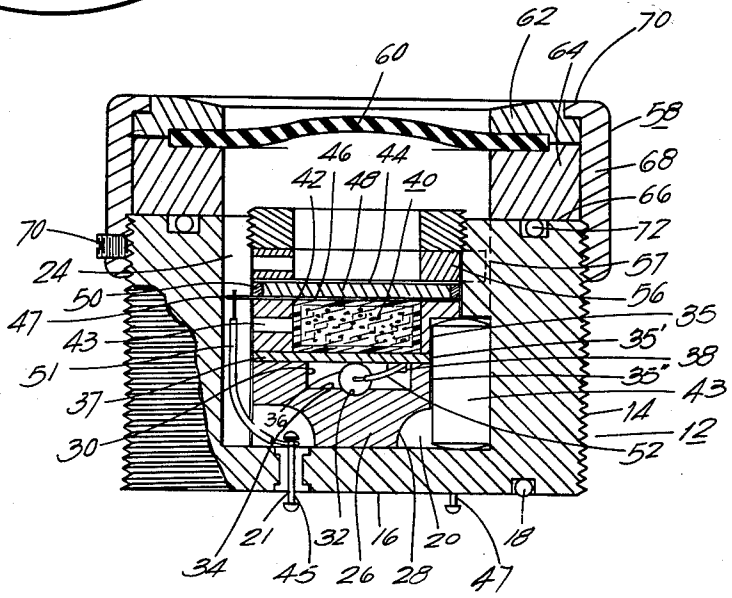

Fig. 2

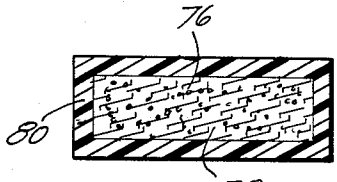

Fig. 3

INVENTOR.
FORREST E. COYLE
BY FRANK P. HODGES
Arthur W. Collins
ATTORNEY

United States Patent Office 3,185,868 Patented May 25, 1965

3,185,868

ACOUSTIC ABSORBER PAD

Forrest E. Coyle, Glen Burnie, and Frank P. Hodges, Baltimore, Md., assignors, by mesne assignments, to the United States of America as represented by the Secretary of the Navy

Filed May 28, 1962, Ser. No. 198,382
3 Claims. (Cl. 310—8.2)

This invention relates to transducer devices and particularly to sound absorbing medium for such devices.

When electrical energy is applied to a piezoelectric crystal of a transducer, equal amounts of sound energy radiate from each side of the crystal. In a sonar transducer it is often desired to have the energy radiate from one side to obtain directivity and therefore radiated unwanted encountered energy must be absorbed. A situation where this is encountered is a sonar transducer used at substantial depth to obtain information relative to the wave motion in order to predict the trajectory of a missile fired from an underwater position.

It is, therefore, an object of this invention to provide a transducer with improved directivity.

Another object is to provide a sonar transducer with a new and improved sound absorbing pad to enable it to obtain better directivity.

A further object is to provide a new material for absorbing high frequency sound waves.

Still a further object is to provide a method of making a high frequency sound absorbing pad for use in transducers.

Other objects will become apparent from the specification and drawing in which the characteristics of the invention are set out.

In the drawing,

FIG. 1 is a plan view of a transducer employing the invention.

FIG. 2 is a cross-sectional view taken along the line 2—2 of FIG. 1.

FIG. 3 is a cross-section through the sound absorbing pad.

The invention is based upon the discovery that high frequency sound waves are absorbed by a batt of loose polyester fibers containing a proper proportion of copper chips distributed through it. A batt of this type formed into a pad and placed to one side of a wave emitting transducer element will absorb the emissions from that side and, consequently, directivity is obtained in that emission only from the free side.

Referring to FIGS. 1 and 2, **10** indicates a transducer having a hollow cylindrical body **12**, externally threaded at **14**, and with a bottom or end wall **16**. Transducer **10** is adapted to be joined by threads **14** with an unshown stuffing tube extending from an underwater craft; an O-ring **18** in end wall **16** seals the joint between them. Conductors connect the transducer through the stuffing tube to the apparatus within the craft. The position of the transducer on the stuffing box is in a upward looking direction toward the water's surface. The construction of a receiving transducer used in conjunction with the transmitter, for the invention's purposes, is similar and may, if so desired, employ the sound absorbing pad, shown in FIG. 3, to be described hereinafter. Description, however, is limited to a transmitter transducer.

The body **12** of the transducer is generally cylindrical and has an axial cavity **20** opening towards its top. Two apertures, **21**, penetrating the end wall **16** and longitudinal flutes **24** in the peripheral wall defining cavity **20** provide a passageway for leading electric energy to the oscillating element within the transducer body.

Seated within the transducer body is a co-axial stack of cylindrical elements shaped to fit the body's cavity

20. The lowermost of these is a coil supporting cartridge **26**. Its lower end is externally reduced by an annular groove **28** in order not to cover the end wall apertures, **21**, and thereby close the passageway between them and flutes **24**. The upper end of coil supporting cartridge **26** has a bore **30** and there is a radial groove **32** in the bottom wall **34** defining the bore **30** which receives a coil **36**. The combined depth of bore **30** and groove **32** is equal to the height of coil **36**. A disk-like coil cover **37** seated on coil support cartridge **26** keeps coil **36** in its desired position. Radial groove **38** in the upper end face of coil cartridge **26** furnishes access for conductors from flutes **24** to coil **36**.

A sound absorbing pad **40** fitted into a ring **42**, having radial apertures **43**, is seated on coil cover **37**. Each of the elements, ring **42**, coil cover **37** and coil support cartridge **26** has an external longitudinal groove, designated as **35**, **35'** and **35''**, respectively, for receiving a dowel **43** mounted in one of the flutes **24**. This secures them against rotation within the transducer body cavity **20**.

The piezoelectric oscillator element **48** is a ceramic disk of barium titanate encircled by a spacer ring **50**. It is disposed between lower and upper electrical contact rings, **44** and **46**, and seated on the sound absorber assembly, ring **42** and pad **40**. Contact rings **44** and **46** are provided with external, radial tabs **47** for entering a flute **24** and securing them against rotation. A conductor **51**, passing along a flute **24**, connects contact ring **44** to a connector **45** in transducer body aperture **21**; whereas, a conductor **52** similarly connects, not shown, contact ring **46** through coil **36** to a connector **47** in the other aperture. Connectors **45** and **47** are adapted to seal the apertures against fluid passage and to receive alternating energy from a source, not shown, for transmission of the energy to the oscillator element by the conductors in the flutes.

The elements thus far described are held against axial movement in transducer body **12** by an externally threaded ring nut **54** which is threaded into the body's cavity **20** and seated on a shim ring **56**. Shim **56** is secured against rotation by a tab **57** entering a flute **24**.

Transducer body **12** contains oil, not shown, and is closed by a cap assembly **58**. The latter includes a rubber disk or sound transmitting window **60** secured at its ends between upper and lower clamping rings, **62** and **64**, which are seated on the end face **66** of the transducer body. Rings **62** and **64** are carried in an encircling nut **68** having an inward flange **70** that engages an end face of the upper ring **62** so that they move axially with it. Nut **68** is threaded to the external threads **14** on the transducer body and further secured with a set screw **70**. An O-ring **72** under the lower ring **64** in the end face of the transducer body is furnished as a seal against fluid leakage.

In operation, alternating electric energy, applied at the faces of oscillator element **48** through the contact rings, **44** and **46**, cause it to vibrate and emit a sound signal in both axial directions of the transducer body **12**. The emission from the upper face passes through the oil, the window **60**, and the water in which the transducer is immersed toward the water's surface. An echo results which is reflected to suitable equipment for resolution. The energy radiated from the lower face toward the bottom of the transducer body, however, is confronted by the sound absorbing pad **40** and absorbed. Emission is thus in one direction, upward from the transducer. For the purposes set out, oscillation is one megacycle or ten times normal frequency which is more than a standard acoustic material can cope with.

The use of various types of lossy rubber and cork to absorb unwanted acoustical energy that is radiated from

transducer elements, may be satisfactory for depths and pressure experienced by submarines of World War II vintage. However, at higher pressures, such as those resulting from depths within the capabilities of present day submarines, these materials lose their lossy properties until this pressure is reduced. In fluid filled transducers, the problem is more severe because the high pressure forces the fluid into the material and then causes a permanent change.

Absorbing pad **40**, FIG. 3, which has proven to perform excellently, comprises a fluffiy batt **76** of polyester fibers of ethylene glycol and terephthalic acid, known as Dacron in the art and supplied by the E. I. du Pont Company, having interspersed throughout a multitude of curled copper chips **78**. A nylon mesh covering **80** encases it to contain the metal chips and yet allow passage of the transducer fluid. The metal chips are used to disperse acoustical energy. The fibers of the Dacron are not bound to each other and proved a pad which is firm and of stable dimension form for suspension of the metal chips are used to disperse acoustical energy.

It will be understood that various changes in the details which have been herein described and illustrated, in order to explain the invention, may be made by those

skilled in the art within the principle and scope of the invention as expressed in the appended claims.

What is claimed is:

1. In an electromechanical transducer, a disk-shaped piezoelectric element, and a fibrous sound absorbing pad, said sound absorbing pad comprising a batt of fibers of polyester of ethylene glycol and terephthalic acid with curled copper filings distributed therethrough.

2. The device of claim 1 wherein said copper filings are curled and there is three and one half times their weight per unit weight of said fibers.

3. The device of claim 2 wherein said pad is enclosed in a nylon mesh casing.

References Cited by the Examiner

UNITED STATES PATENTS

2,427,348	9/47	Bond et al.	
2,707,755	5/55	Hardie et al.	310—8.2
2,881,336	4/59	Elion	310—8.2
2,972,068	2/61	Howry et al.	

MILTON O. HIRSHFIELD, *Primary Examiner.*

ORIS L. RADER, *Examiner.*