US 20020184384A1

(19) United States

(12) Patent Application Publication (10) Pub. No.: US 2002/0184384 A1

Simmon et al. (43) Pub. Date: Dec. 5, 2002

(54) COMMUNICATION PROTOCOL FOR USE WITH A DATA ACQUISITION AND RETRIEVAL SYSTEM WITH HANDHELD USER INTERFACE

(76) Inventors: **Arnulf Simmon**, Bozeman, MT (US); **Brett Donahue**, Bozeman, MT (US)

Correspondence Address:
Thomas J. Perkowski, Esq., P.C.
Soundview Plaza
1266 East Main Street
Stamford, CT 06902 (US)

(21) Appl. No.: **10/084,242**

(22) Filed: **Feb. 27, 2002**

Related U.S. Application Data

(63) Continuation of application No. 09/241,214, filed on Feb. 1, 1999, now Pat. No. 6,389,477, which is a continuation of application No. 08/196,452, filed on Feb. 14, 1994, now Pat. No. 5,867,688.

Publication Classification

(51) **Int. Cl.**[7] **G06F 15/16**

(52) **U.S. Cl.** **709/236**

(57) **ABSTRACT**

A packet-based communication protocol for communicating messages between computing devices over a communication link therebetween (such as between a communication server and hand-held data acquisition device over a wireless link therebetween), each message comprising a plurality of equal length information packets. A first information packet in each message is constructed with a first format including a long header and a data segment. All information packets subsequent to the first information packet in each message are constructed with a second format including a short header and a data segment. The data segments from the plurality of information packets within each message form a single data set related to a single matter. The use of the short header in the second format information packets maximizes the amount of information contained in such information packets and thus provides for improved information throughput.

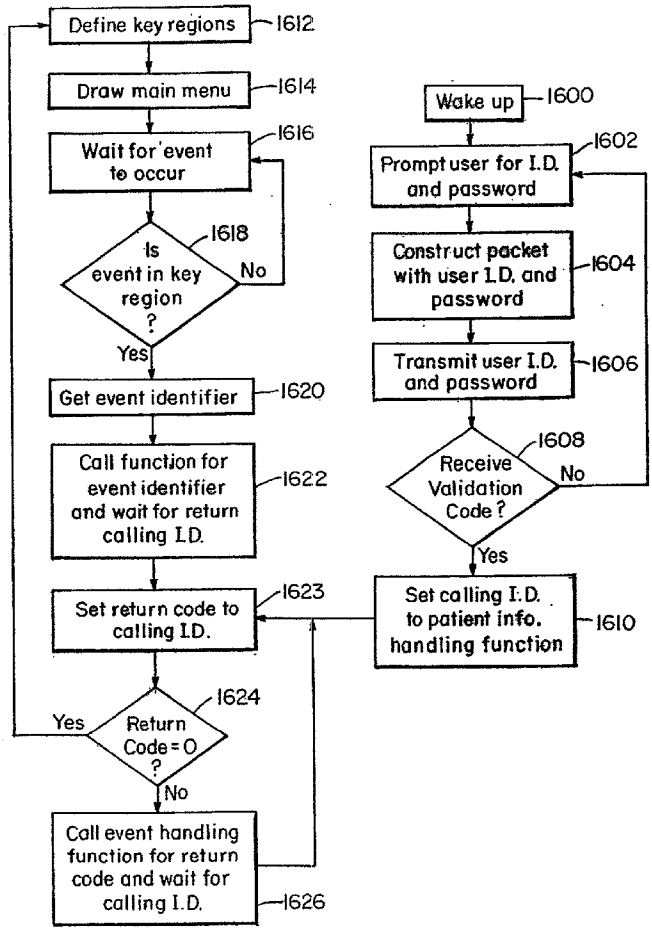

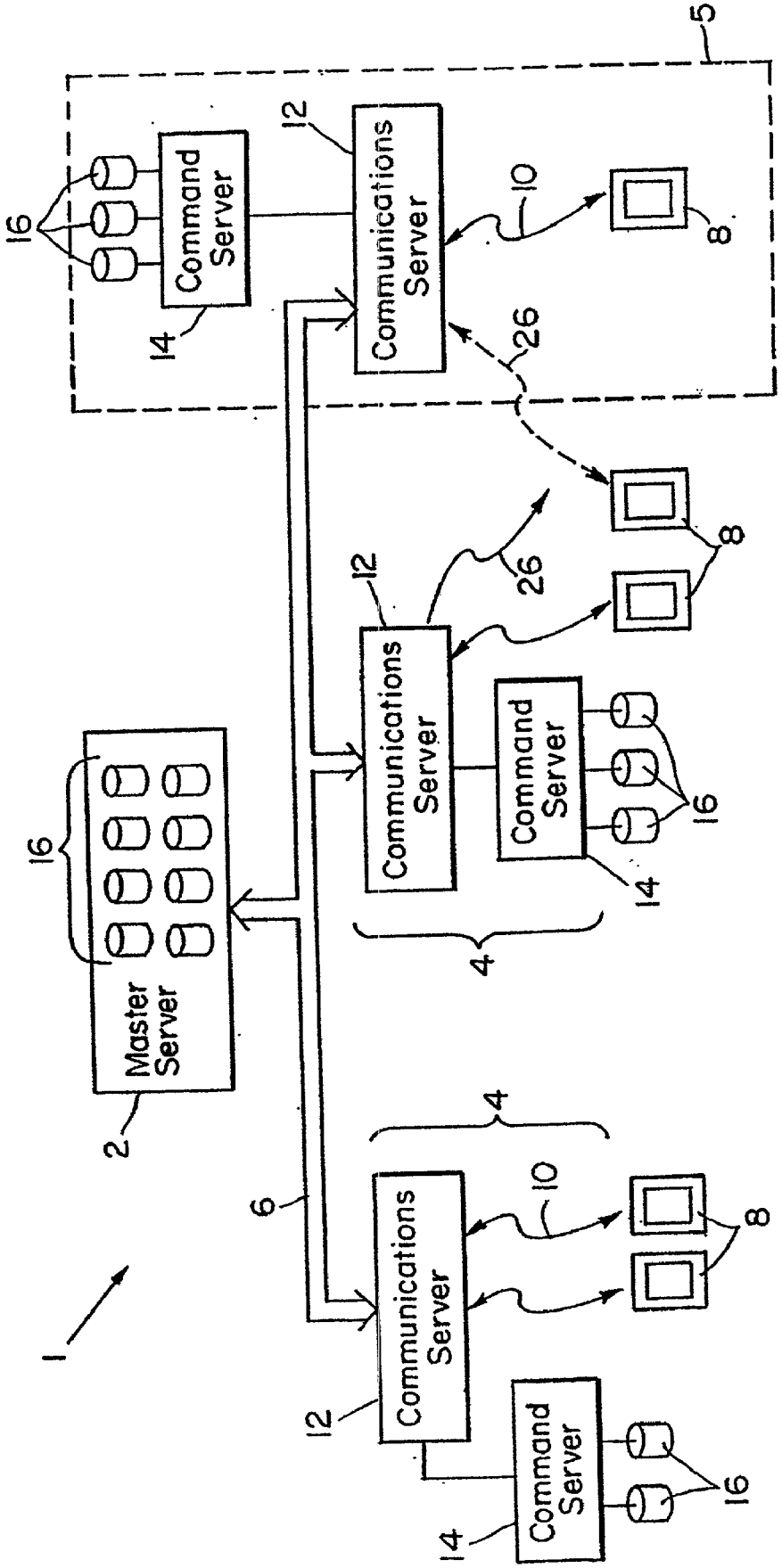
5
12
Communications Server
Command Server
16
14
10
8
26
Master Server
2
6
4
1

FIG. 1

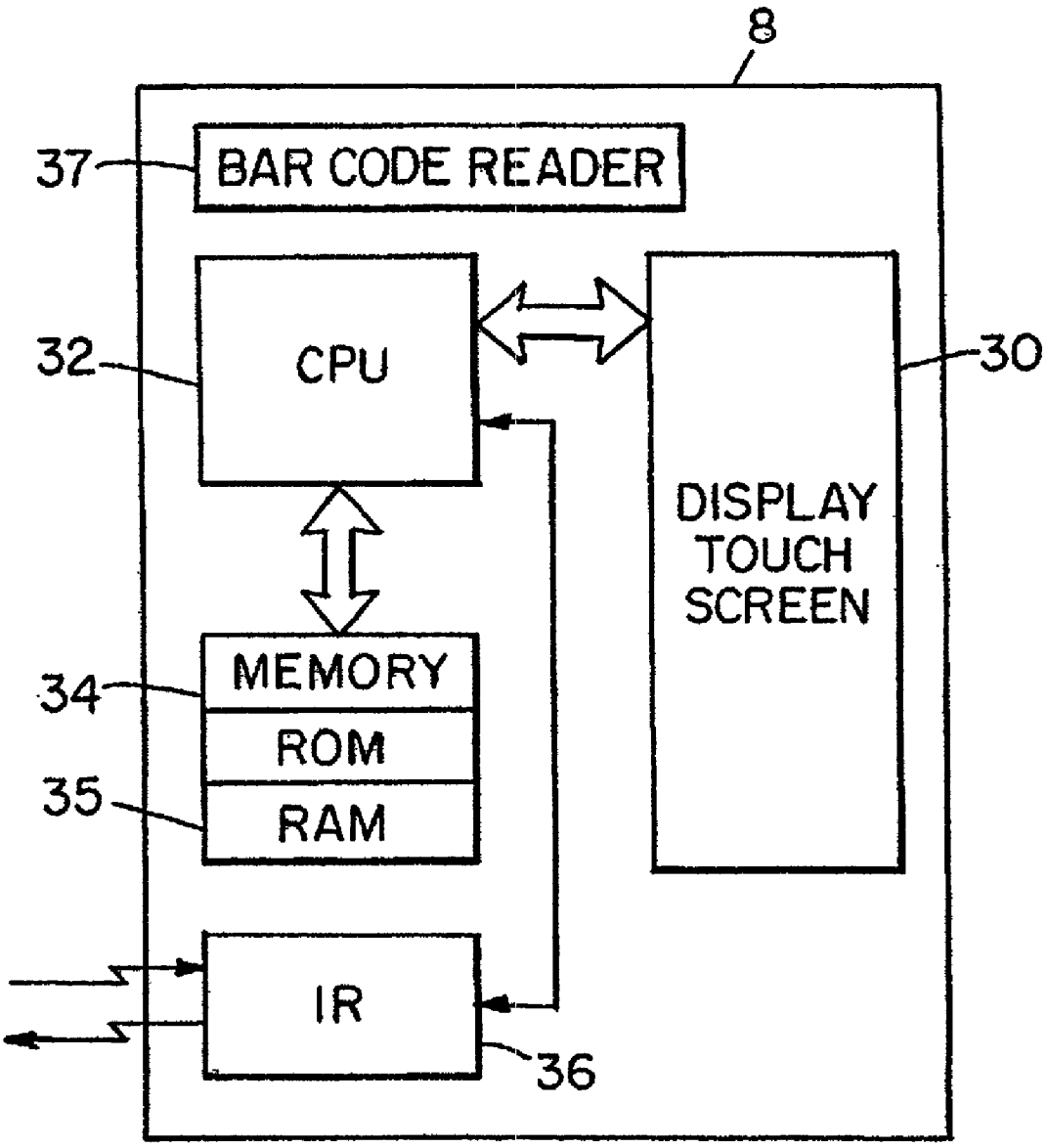
8
37
BAR CODE READER
32
CPU
30
DISPLAY
TOUCH
SCREEN
34
MEMORY
ROM
35
RAM
IR
36

FIG. 2

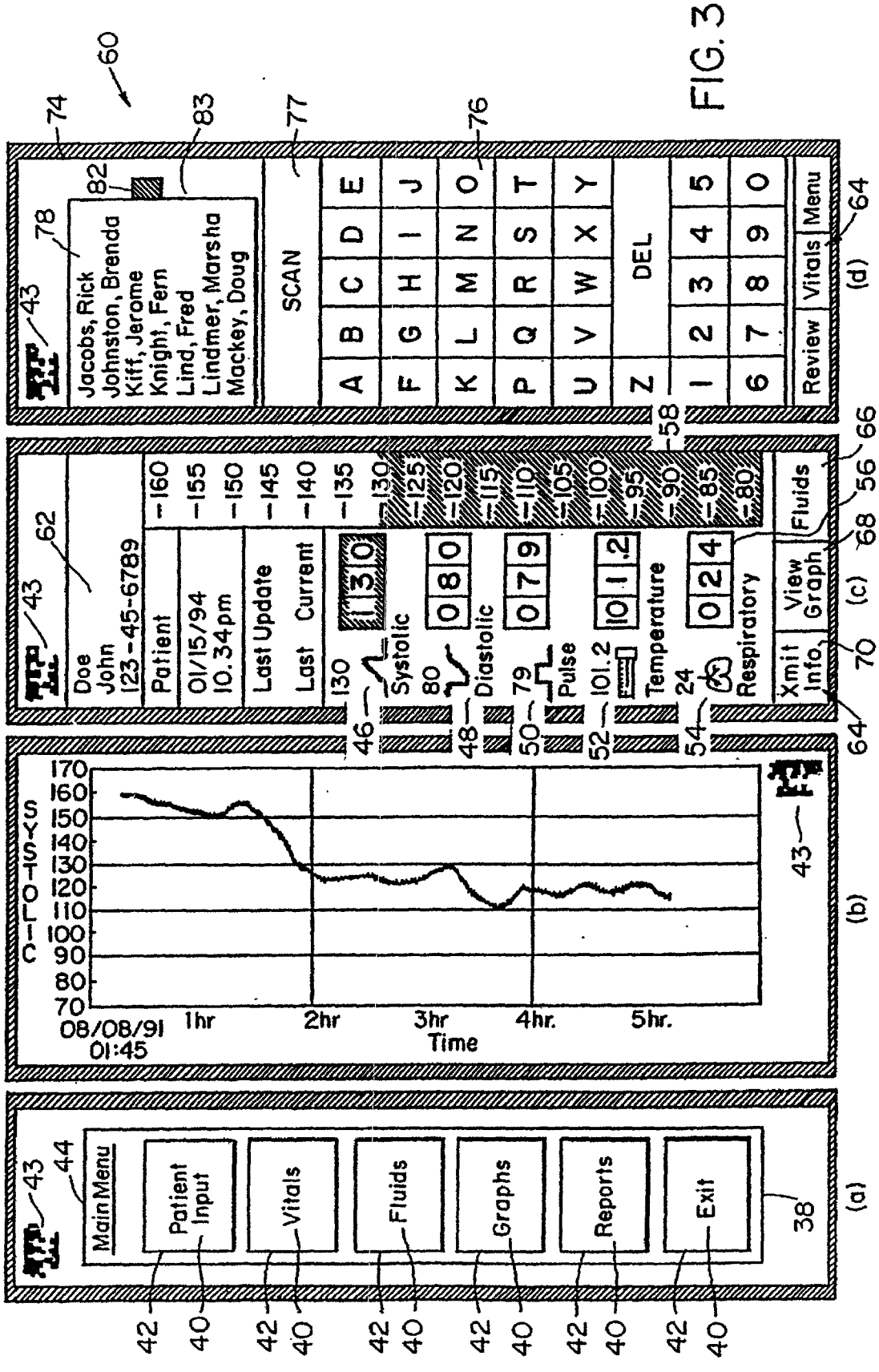
(a)
Main Menu
Patient Input
Vitals
Fluids
Graphs
Reports
Exit
(b)
170
160
150
140
130
120
110
100
90
80
70
08/08/91
01:45
1hr
2hr
3hr
4hr.
5hr.
Time
(c)
Doe
John
123-45-6789
Patient
01/15/94
10.34pm
Last Update
Last Current
130
Systolic
80
Diastolic
79
Pulse
101.2
Temperature
24
Respiratory
Xmit Info.
View Graph
Fluids
(d)
Jacobs, Rick
Johnston, Brenda
Kiff, Jerome
Knight, Fern
Lind, Fred
Lindmer, Marsha
Mackey, Doug
SCAN
DEL
Review
Vitals
Menu

FIG. 3

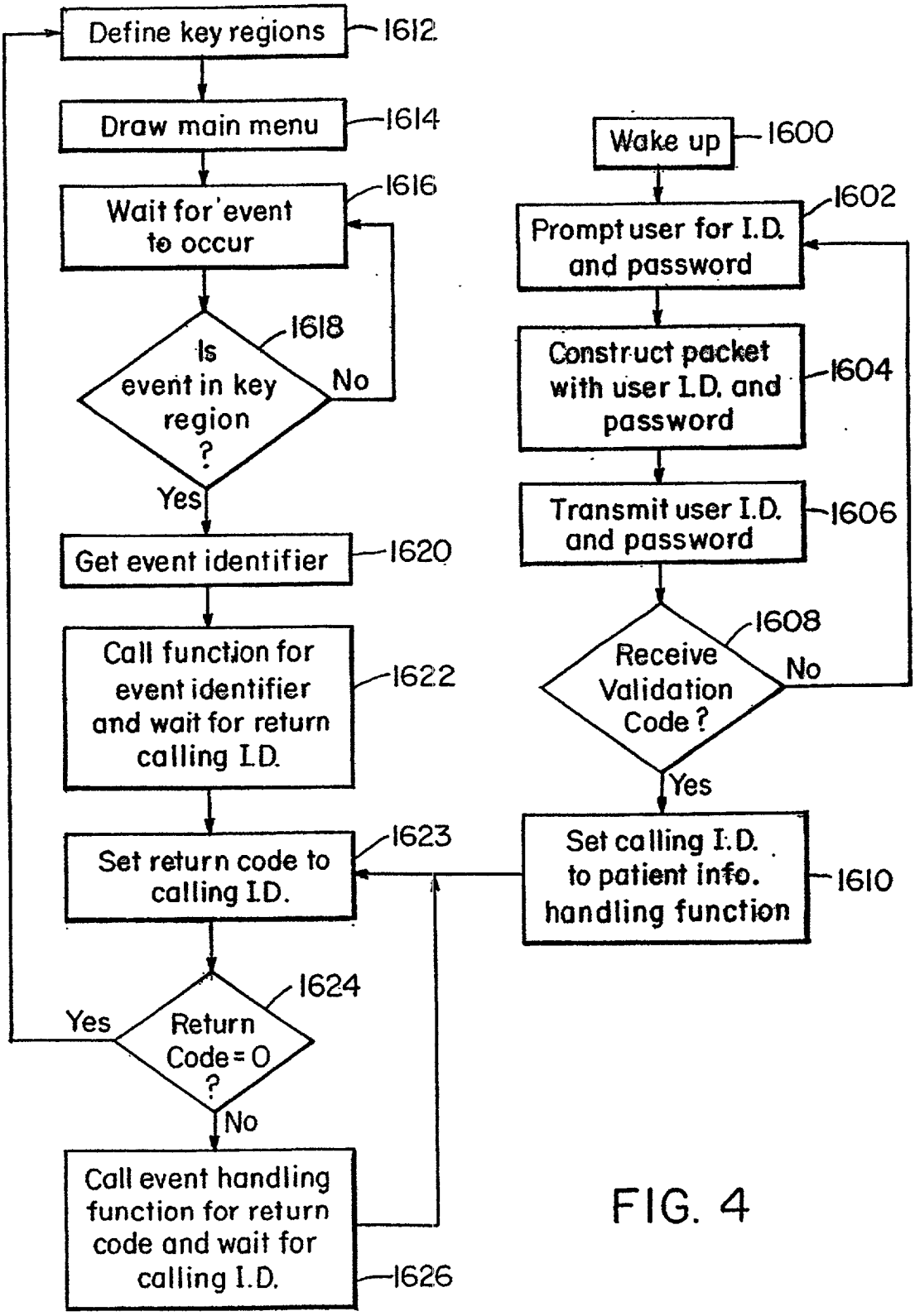
Wake up
1600
Prompt user for I.D. and password
1602
Construct packet with user I.D. and password
1604
Transmit user I.D. and password
1606
Receive Validation Code ?
1608
No
Yes
Set calling I.D. to patient info. handling function
1610
Define key regions
1612
Draw main menu
1614
Wait for event to occur
1616
Is event in key region ?
1618
No
Yes
Get event identifier
1620
Call function for event identifier and wait for return calling I.D.
1622
Set return code to calling I.D.
1623
Return Code = 0 ?
1624
Yes
No
Call event handling function for return code and wait for calling I.D.
1626

FIG. 4

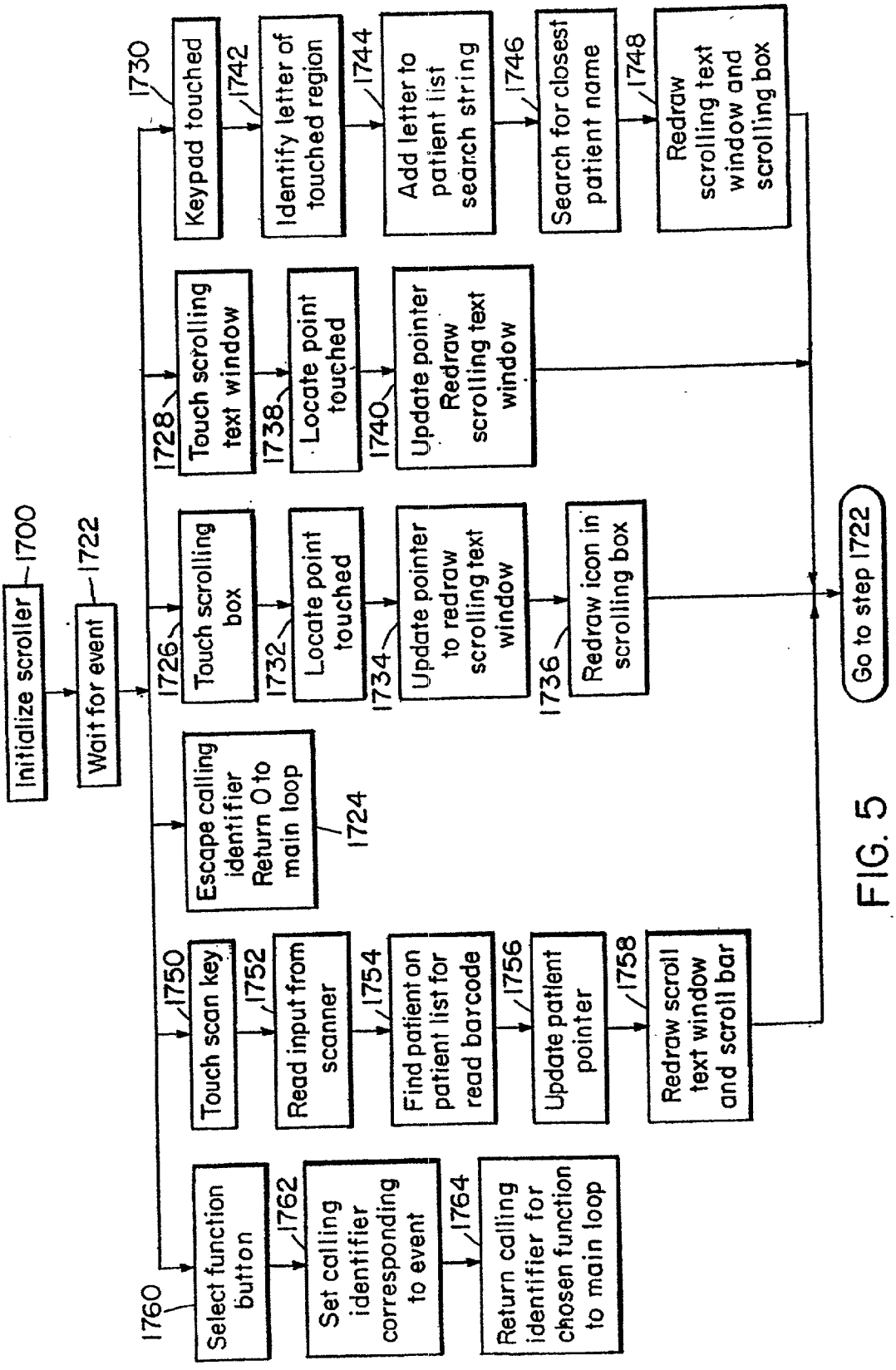
Initialize scroller
1700
Wait for event
1722
1730
Keypad touched
1742
Identify letter of touched region
1744
Add letter to patient list search string
1746
Search for closest patient name
1748
Redraw scrolling text window and scrolling box
1728
Touch scrolling text window
1738
Locate point touched
1740
Update pointer Redraw scrolling text window
1726
Touch scrolling box
1732
Locate point touched
1734
Update pointer to redraw scrolling text window
1736
Redraw icon in scrolling box
Escape calling identifier Return 0 to main loop
1724
1750
Touch scan key
1752
Read input from scanner
1754
Find patient on patient list for read barcode
1756
Update patient pointer
1758
Redraw scroll text window and scroll bar
1760
Select function button
1762
Set calling identifier corresponding to event
1764
Return calling identifier for chosen function to main loop
Go to step 1722

FIG. 5

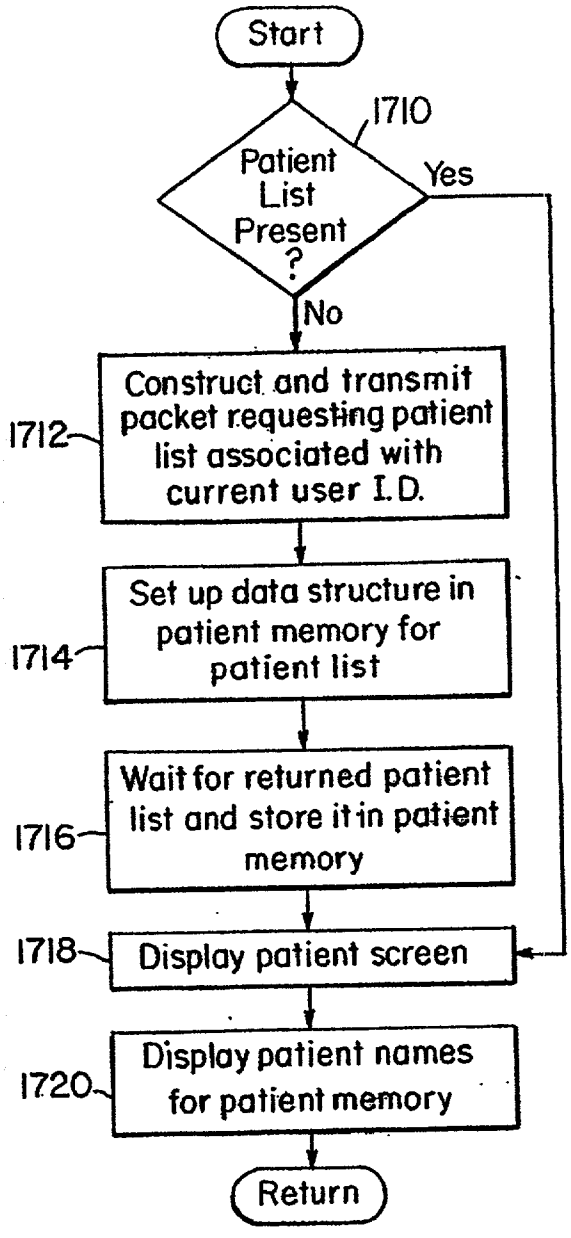
Start
1710
Patient List Present ?
Yes
No
1712
Construct and transmit packet requesting patient list associated with current user I.D.
1714
Set up data structure in patient memory for patient list
1716
Wait for returned patient list and store it in patient memory
1718
Display patient screen
1720
Display patient names for patient memory
Return

FIG. 6

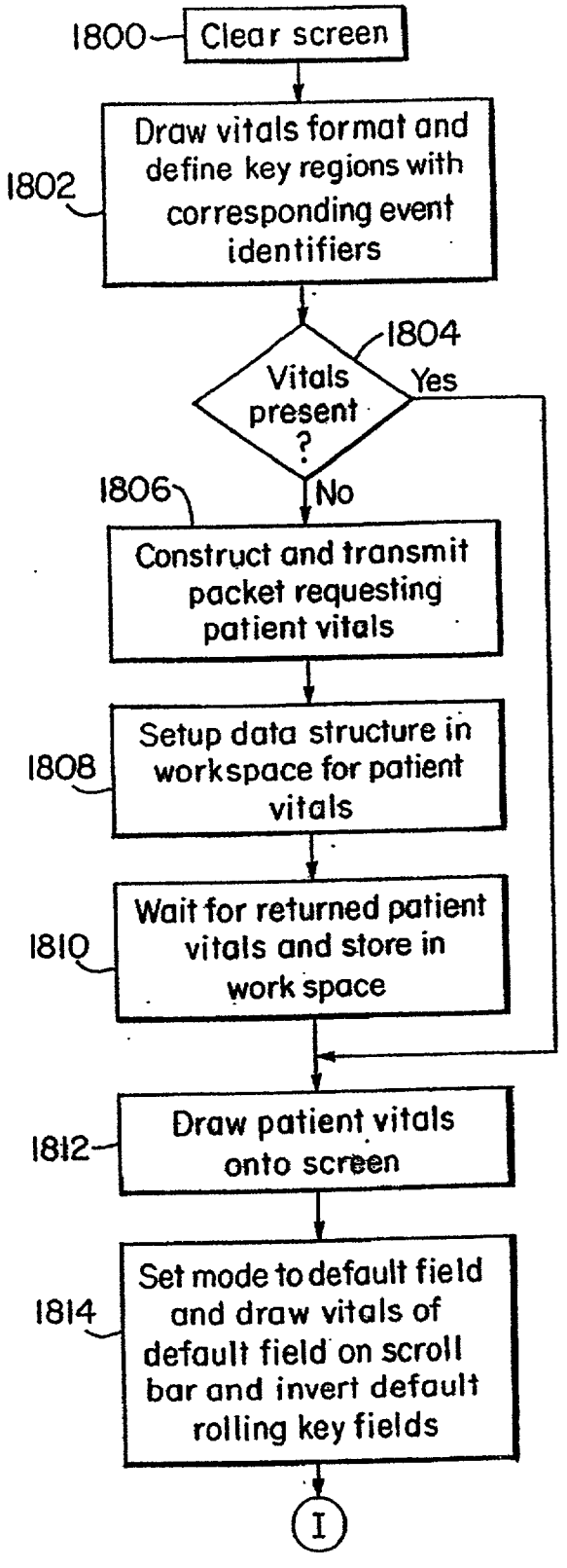
1800
Clear screen
1802
Draw vitals format and define key regions with corresponding event identifiers
1804
Vitals present ?
Yes
No
1806
Construct and transmit packet requesting patient vitals
1808
Setup data structure in workspace for patient vitals
1810
Wait for returned patient vitals and store in work space
1812
Draw patient vitals onto screen
1814
Set mode to default field and draw vitals of default field on scroll bar and invert default rolling key fields
I

FIG. 8

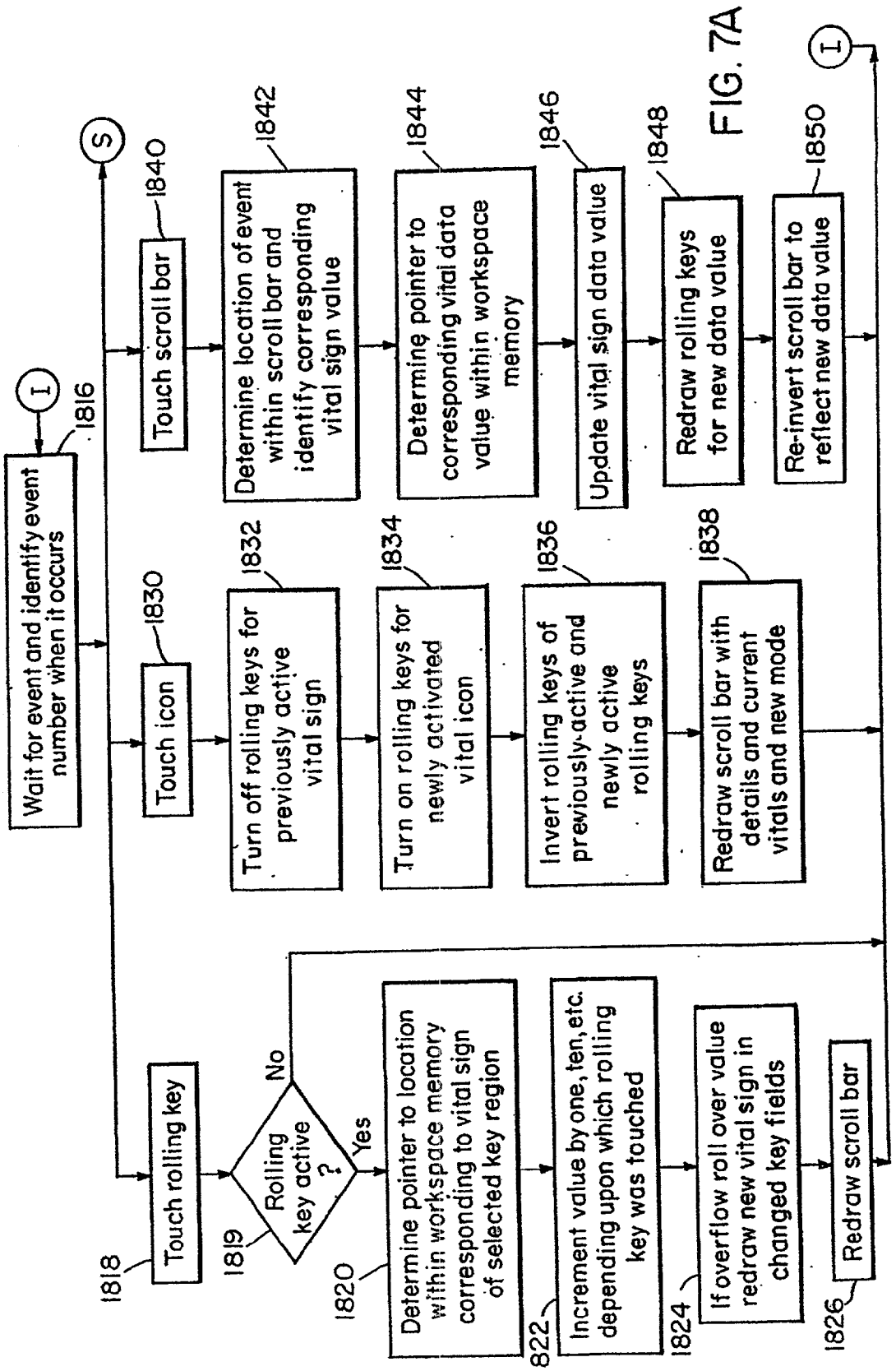
Wait for event and identify event number when it occurs
1816
Touch rolling key
1818
Rolling key active ?
1819
No
Yes
Determine pointer to location within workspace memory corresponding to vital sign of selected key region
1820
Increment value by one, ten, etc. depending upon which rolling key was touched
1822
If overflow roll over value redraw new vital sign in changed key fields
1824
Redraw scroll bar
1826
Touch icon
1830
Turn off rolling keys for previously active vital sign
1832
Turn on rolling keys for newly activated vital icon
1834
Invert rolling keys of previously-active and newly active rolling keys
1836
Redraw scroll bar with details and current vitals and new mode
1838
Touch scroll bar
1840
Determine location of event within scroll bar and identify corresponding vital sign value
1842
Determine pointer to corresponding vital data value within workspace memory
1844
Update vital sign data value
1846
Redraw rolling keys for new data value
1848
Re-invert scroll bar to reflect new data value
1850
S
I
I

FIG. 7A

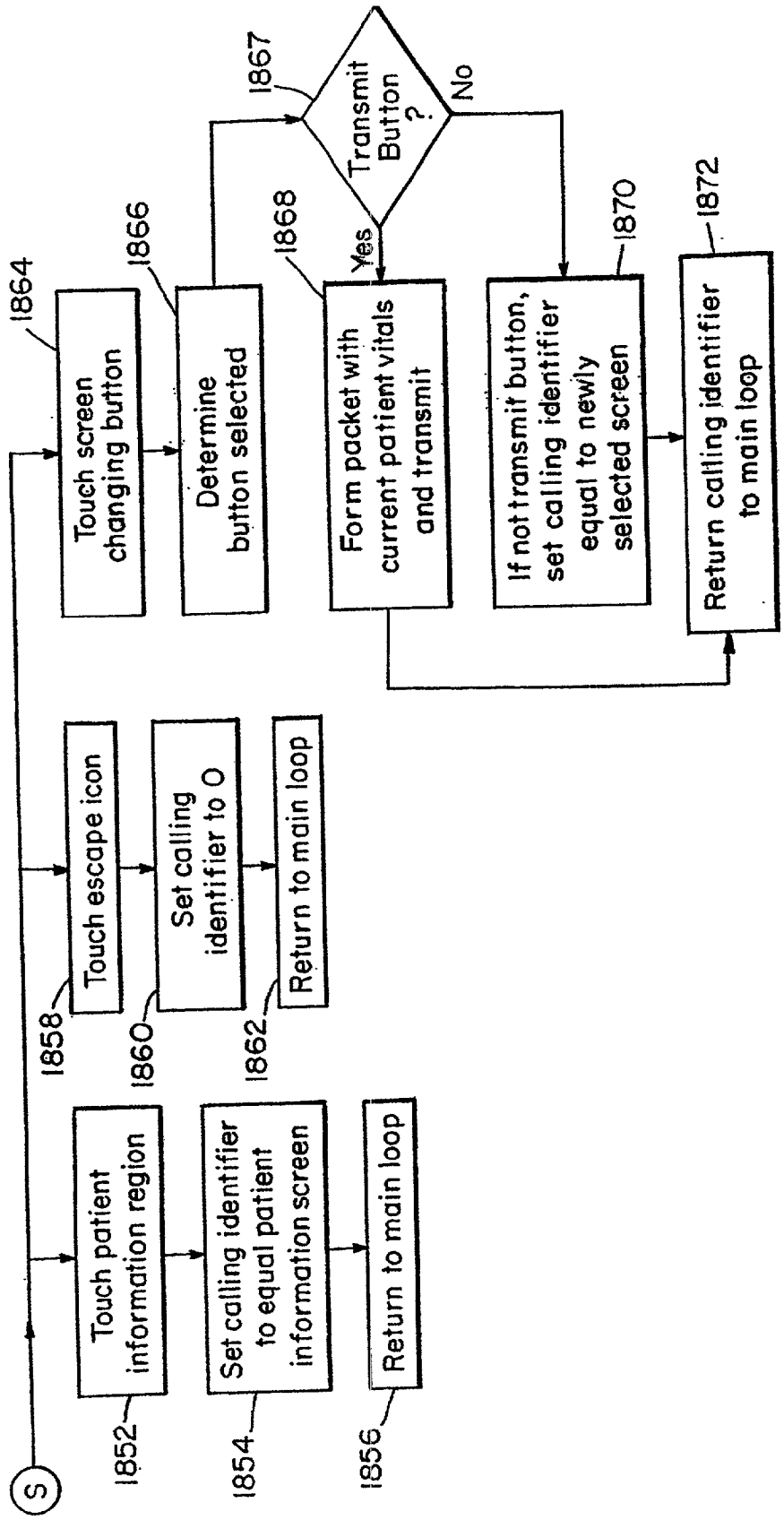
S
1852
Touch patient information region
1854
Set calling identifier to equal patient information screen
1856
Return to main loop
1858
Touch escape icon
1860
Set calling identifier to 0
1862
Return to main loop
1864
Touch screen changing button
1866
Determine button selected
1867
Transmit Button ?
Yes
No
1868
Form packet with current patient vitals and transmit
1870
If not transmit button, set calling identifier equal to newly selected screen
1872
Return calling identifier to main loop

FIG. 7B

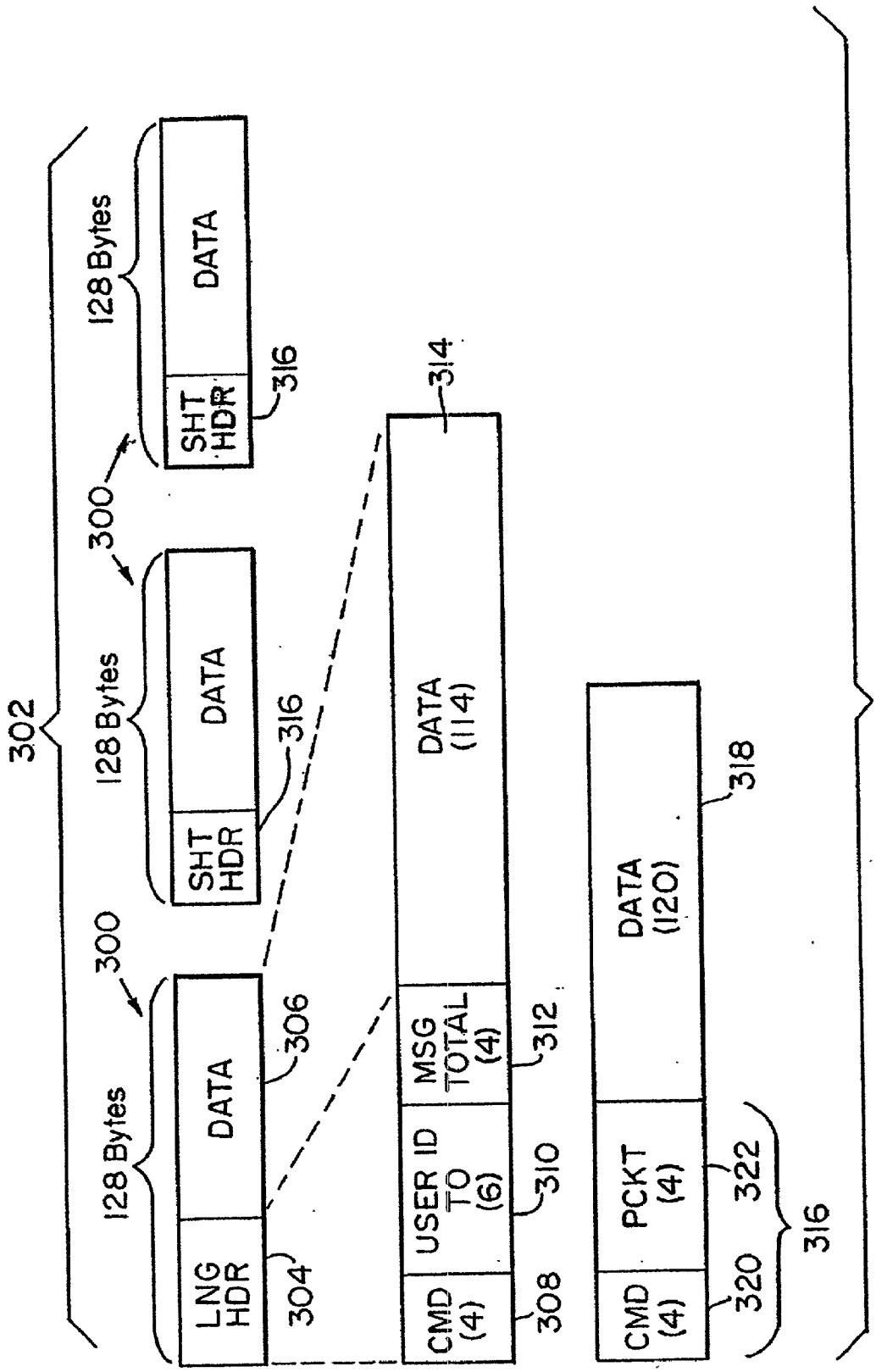
302
300
128 Bytes
LNG HDR
DATA
304
306
SHT HDR
316
USER ID TO (6)
310
MSG TOTAL (4)
312
CMD (4)
308
DATA (114)
314
DATA (120)
318
PCKT (4)
322
320

FIG. 9

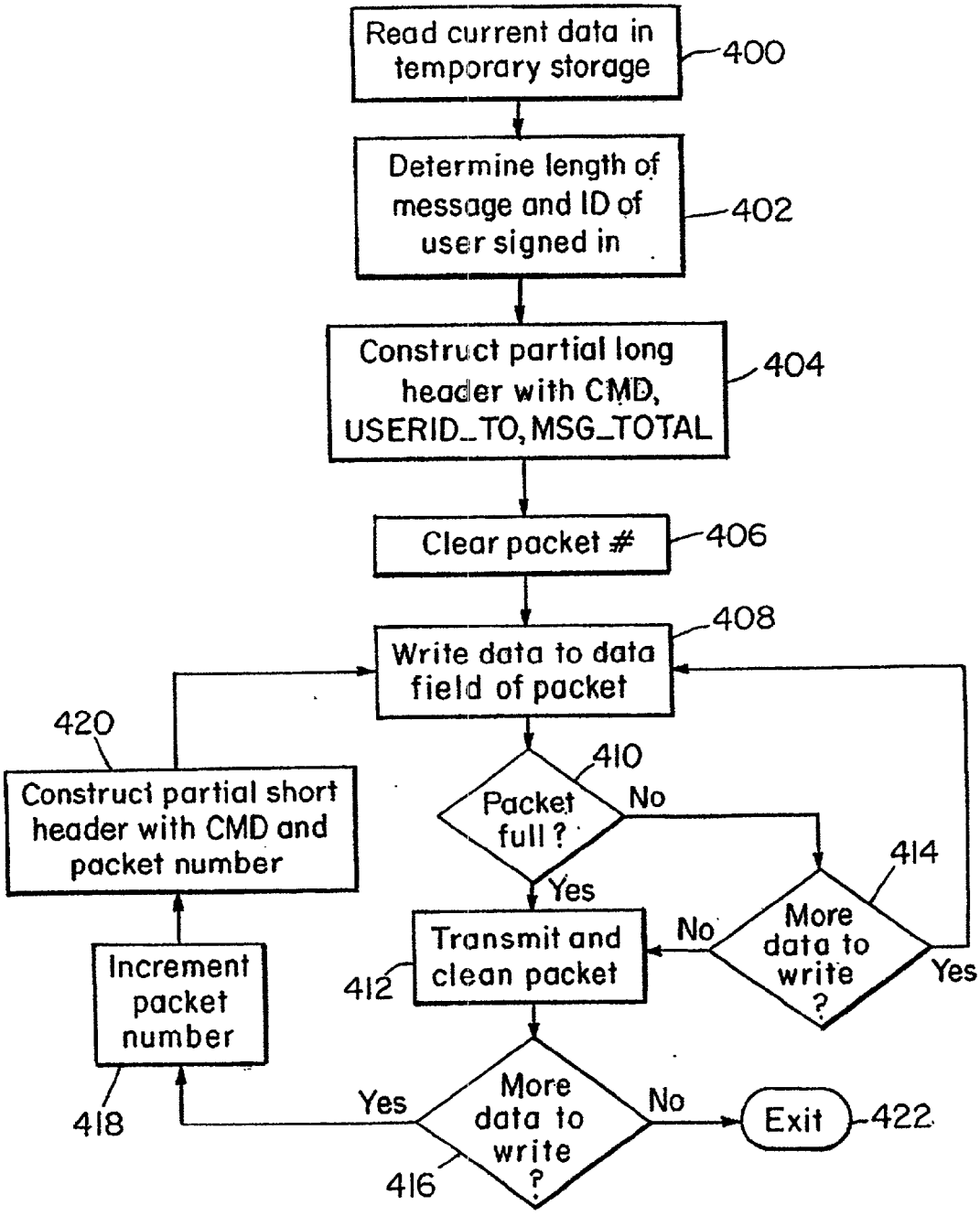
Read current data in temporary storage
400
Determine length of message and ID of user signed in
402
Construct partial long header with CMD, USERID_TO, MSG_TOTAL
404
Clear packet #
406
Write data to data field of packet
408
Packet full ?
410
No
Yes
More data to write ?
414
No
Yes
Transmit and clean packet
412
More data to write ?
416
Yes
No
Exit
422
Increment packet number
418
Construct partial short header with CMD and packet number
420

FIG. 10

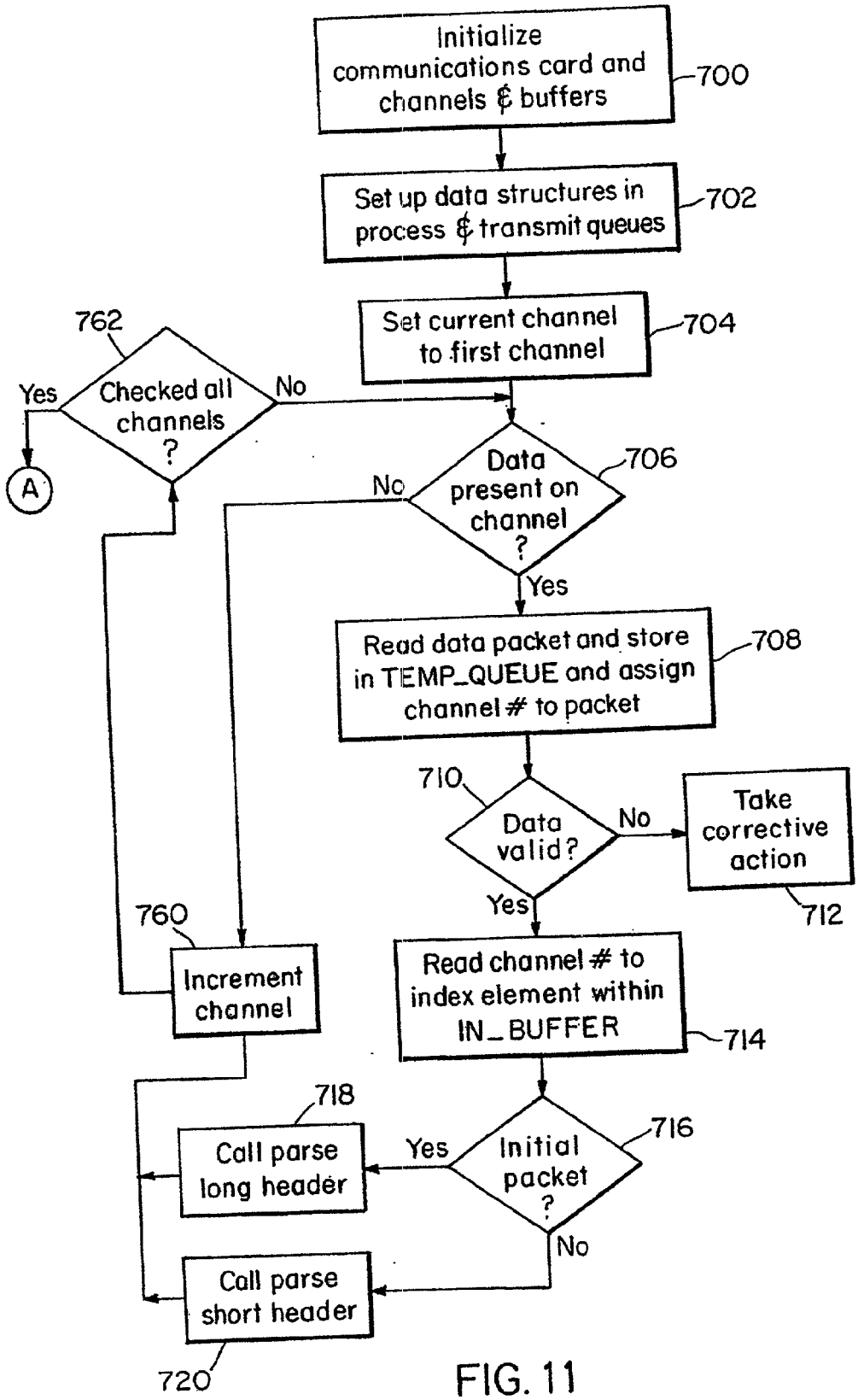
Initialize communications card and channels & buffers
700
Set up data structures in process & transmit queues
702
Set current channel to first channel
704
762
Checked all channels ?
Yes
No
A
Data present on channel ?
706
No
Yes
Read data packet and store in TEMP_QUEUE and assign channel # to packet
708
710
Data valid?
No
Take corrective action
712
Yes
760
Increment channel
Read channel # to index element within IN_BUFFER
714
718
Call parse long header
Yes
Initial packet ?
716
No
Call parse short header
720

FIG. 11

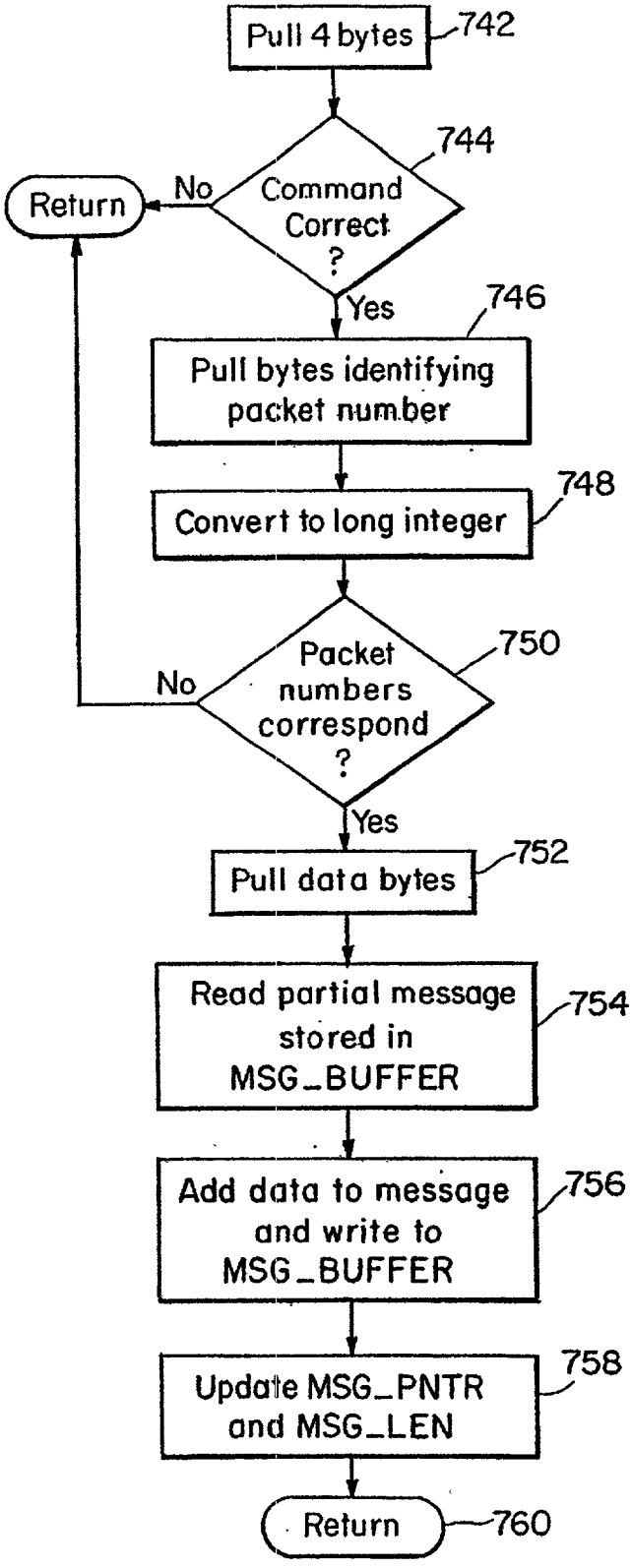
Pull 4 bytes
742
744
Command Correct ?
No
Return
Yes
746
Pull bytes identifying packet number
748
Convert to long integer
750
Packet numbers correspond ?
No
Yes
752
Pull data bytes
754
Read partial message stored in MSG_BUFFER
756
Add data to message and write to MSG_BUFFER
758
Update MSG_PNTR and MSG_LEN
Return
760

FIG. 12

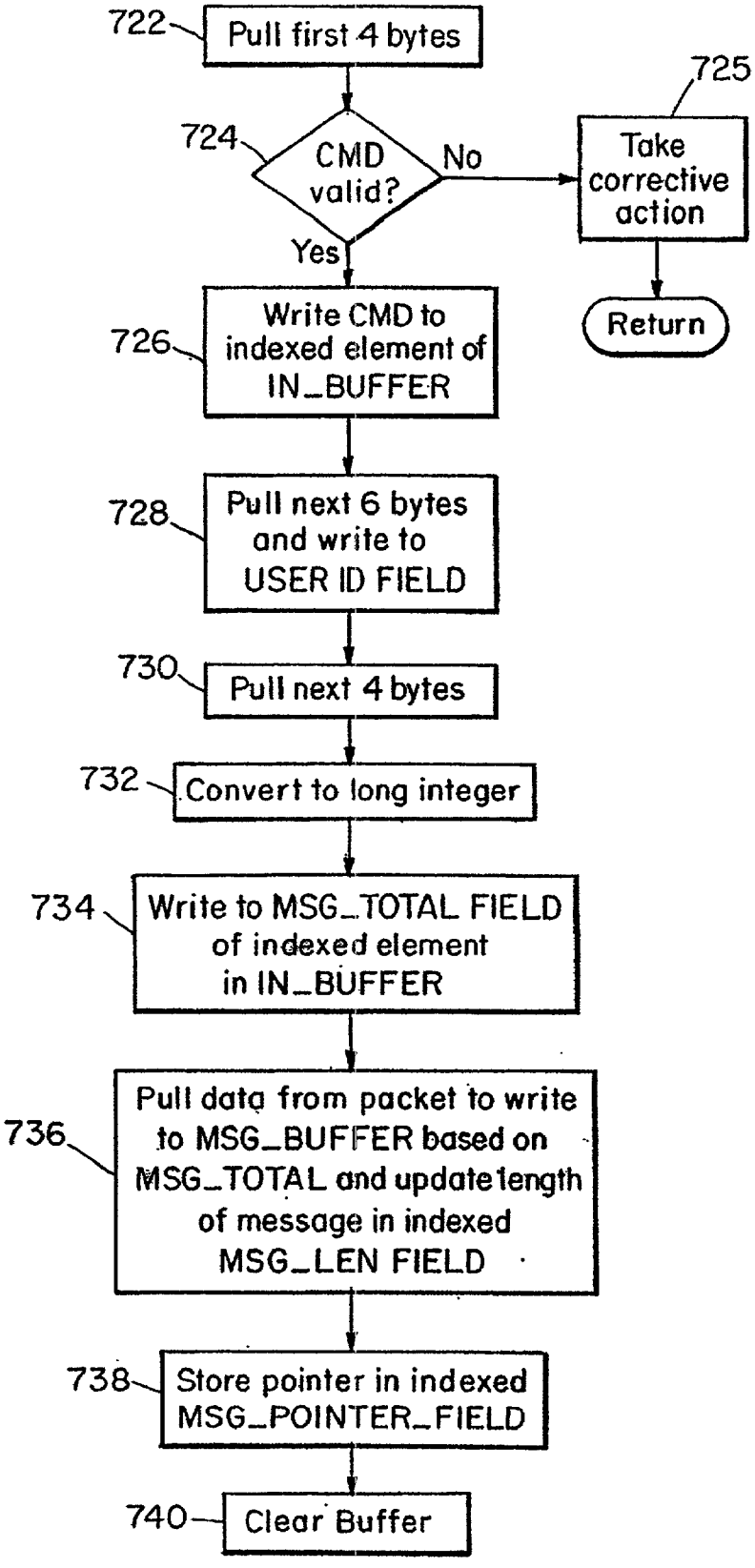
722
Pull first 4 bytes
724
CMD valid?
No
Yes
725
Take corrective action
Return
726
Write CMD to indexed element of IN_BUFFER
728
Pull next 6 bytes and write to USER ID FIELD
730
Pull next 4 bytes
732
Convert to long integer
734
Write to MSG_TOTAL FIELD of indexed element in IN_BUFFER
736
Pull data from packet to write to MSG_BUFFER based on MSG_TOTAL and update length of message in indexed MSG_LEN FIELD
738
Store pointer in indexed MSG_POINTER_FIELD
740
Clear Buffer

FIG. 13

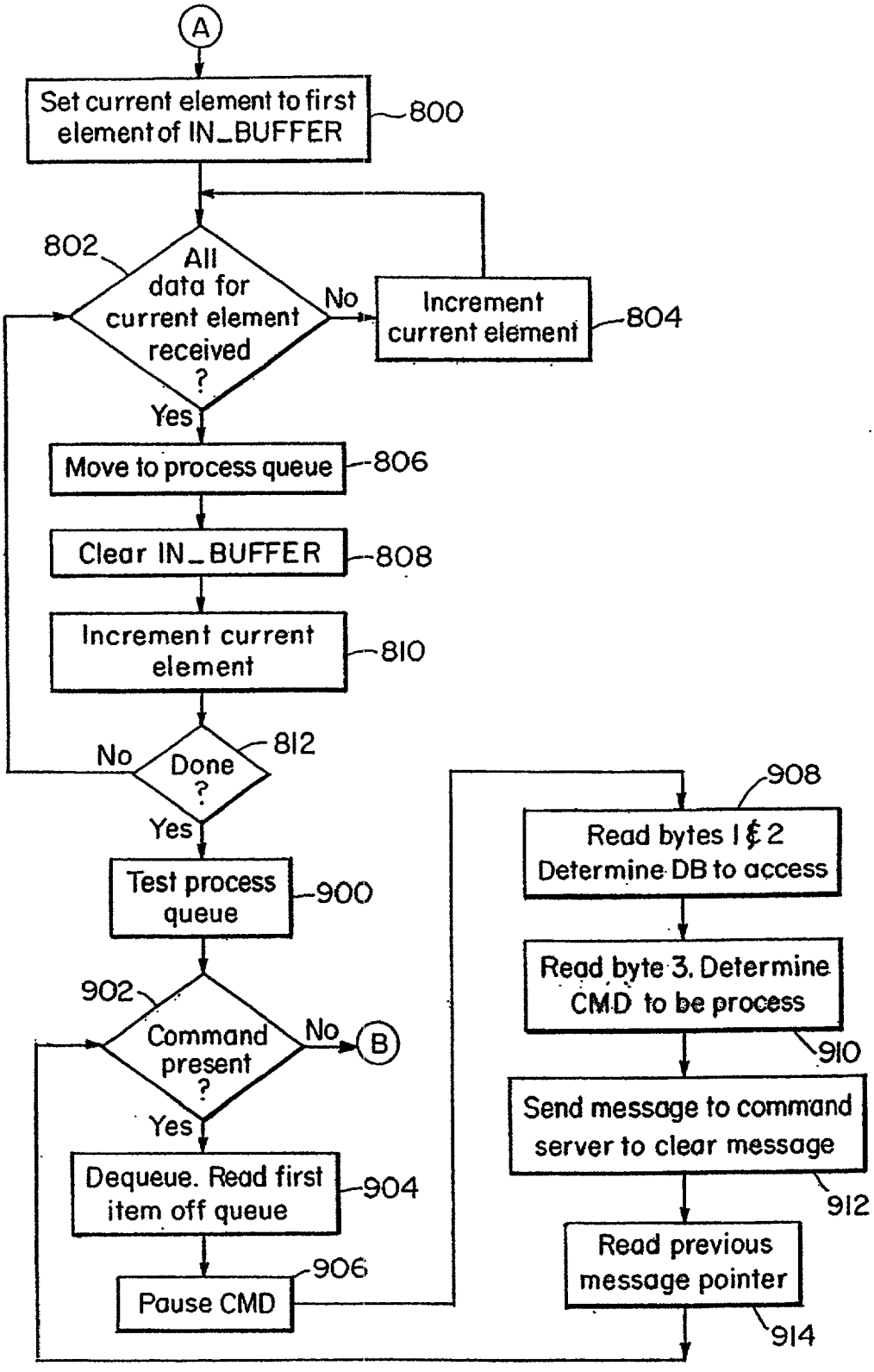
A
Set current element to first element of IN_BUFFER
800
802
All data for current element received ?
No
Increment current element
804
Yes
Move to process queue
806
Clear IN_BUFFER
808
Increment current element
810
No
Done ?
812
Yes
Test process queue
900
902
Command present ?
No
B
Yes
Dequeue. Read first item off queue
904
Pause CMD
906
908
Read bytes 1 & 2 Determine DB to access
Read byte 3. Determine CMD to be process
910
Send message to command server to clear message
912
Read previous message pointer
914

FIG. 14

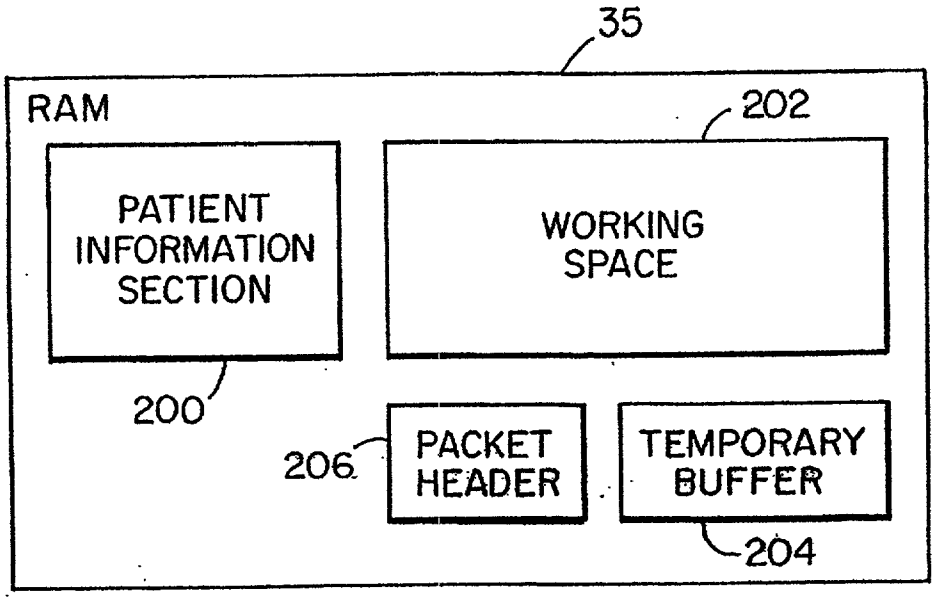
35
RAM
202
PATIENT INFORMATION SECTION
WORKING SPACE
200
206
PACKET HEADER
TEMPORARY BUFFER
204

FIG. 15

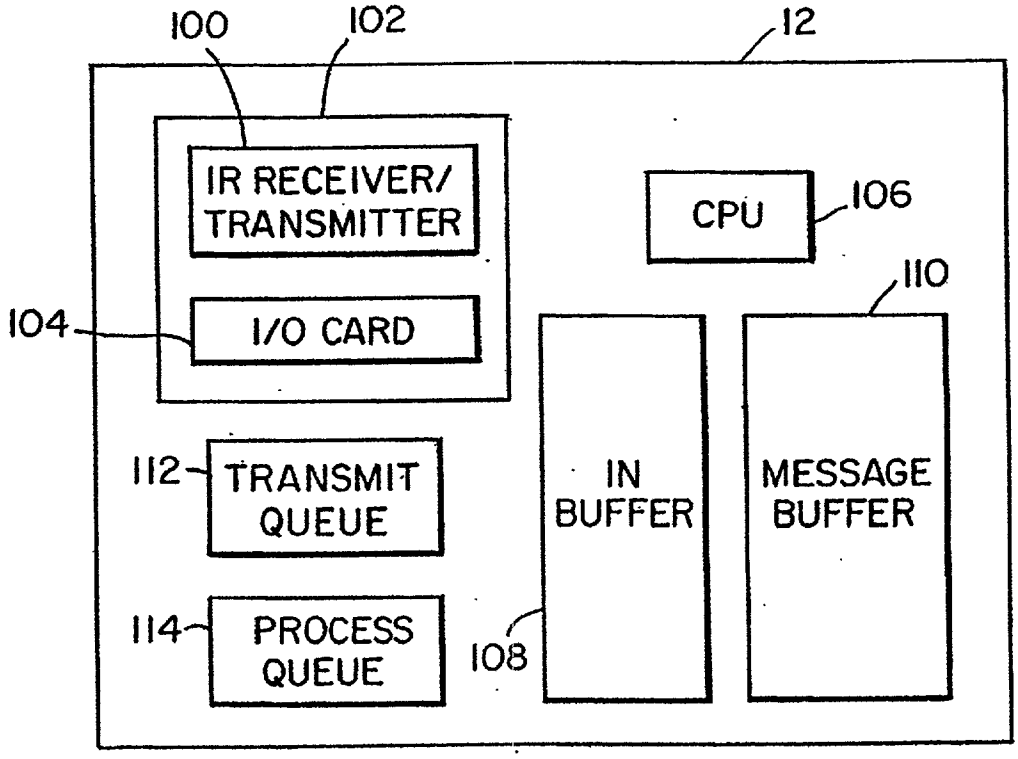
100
102
12
IR RECEIVER/ TRANSMITTER
CPU
106
110
104
I/O CARD
IN BUFFER
MESSAGE BUFFER
112
TRANSMIT QUEUE
114
PROCESS QUEUE
108

FIG. 16

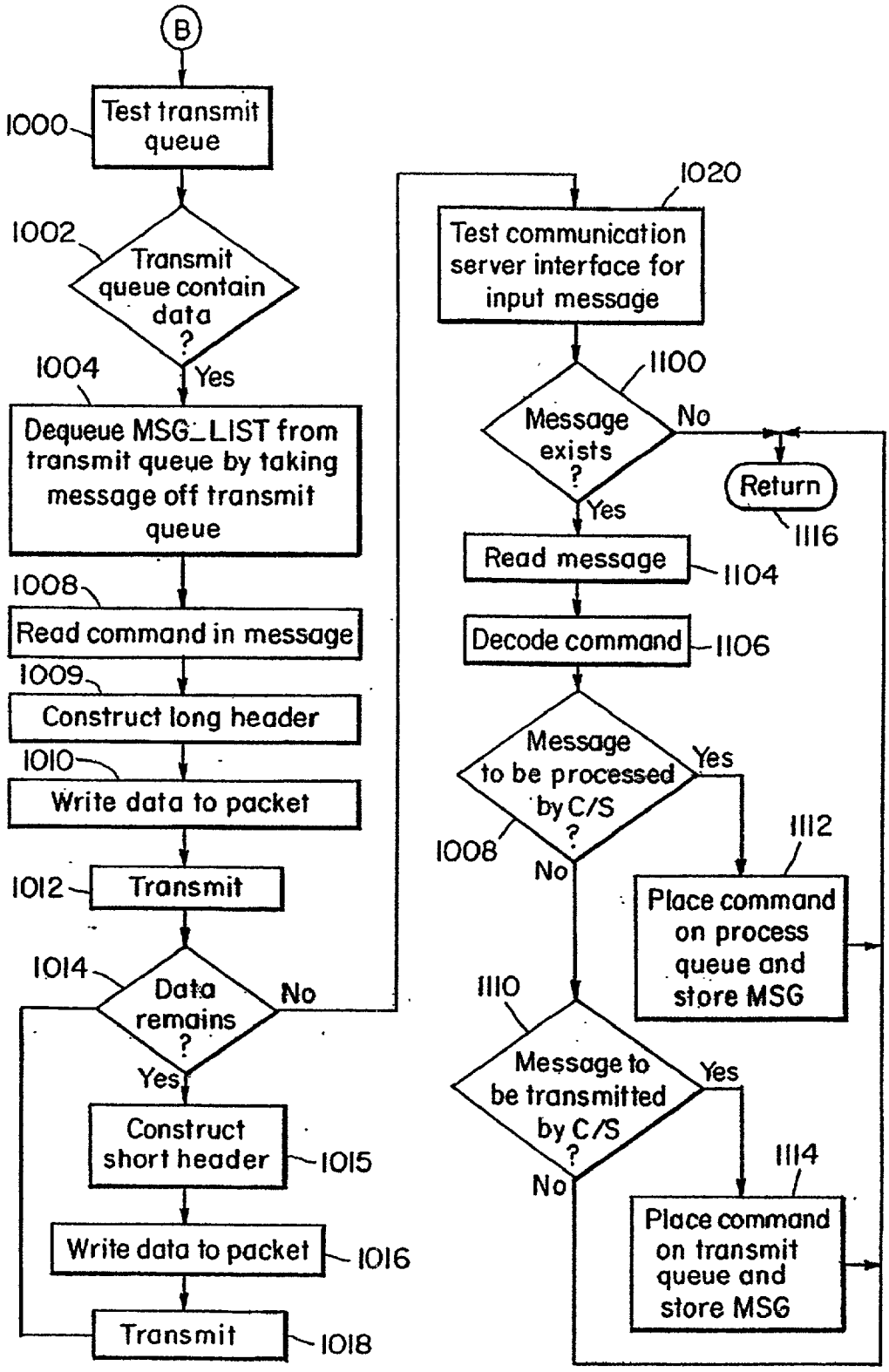
B
1000
Test transmit queue
1002
Transmit queue contain data ?
Yes
1004
Dequeue MSG_LIST from transmit queue by taking message off transmit queue
1008
Read command in message
1009
Construct long header
1010
Write data to packet
1012
Transmit
1014
Data remains ?
No
Yes
Construct short header
1015
Write data to packet
1016
Transmit
1018
1020
Test communication server interface for input message
1100
Message exists ?
No
Yes
Return
1116
Read message
1104
Decode command
1106
Message to be processed by C/S ?
Yes
1008
No
1112
Place command on process queue and store MSG
1110
Message to be transmitted by C/S ?
Yes
No
1114
Place command on transmit queue and store MSG

FIG. 17

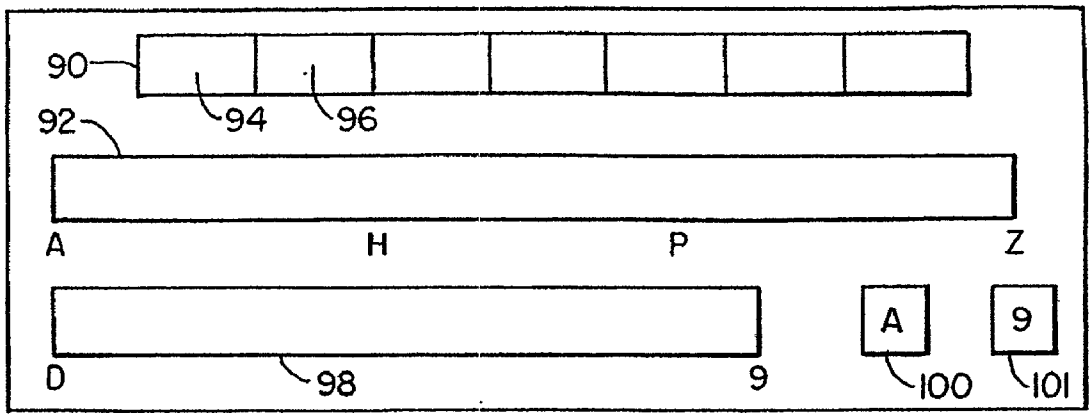
90
94
96
92
A
H
P
Z
D
98
9
A
9
100
101

FIG. 18

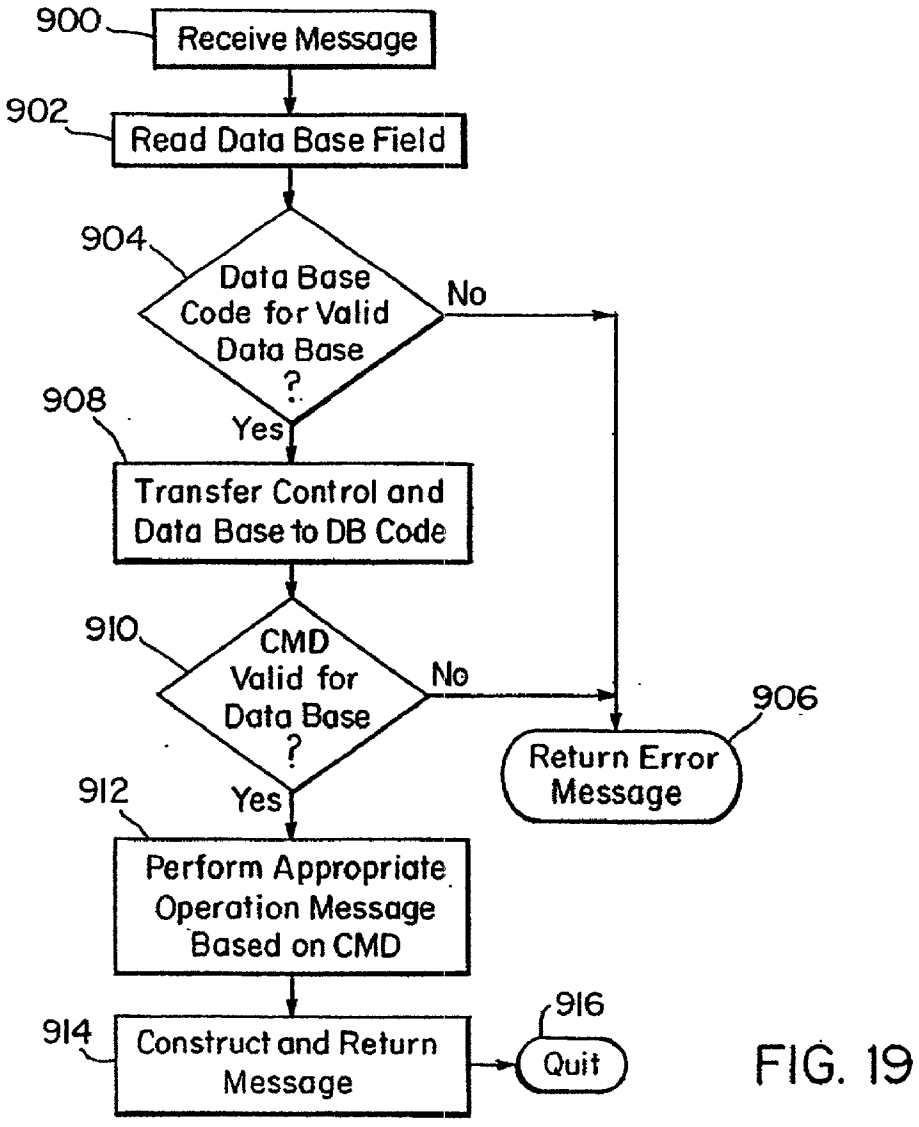
900
Receive Message
902
Read Data Base Field
904
Data Base Code for Valid Data Base ?
No
Yes
908
Transfer Control and Data Base to DB Code
910
CMD Valid for Data Base ?
No
Yes
906
Return Error Message
912
Perform Appropriate Operation Message Based on CMD
914
Construct and Return Message
916
Quit

FIG. 19

COMMUNICATION PROTOCOL FOR USE WITH A DATA ACQUISITION AND RETRIEVAL SYSTEM WITH HANDHELD USER INTERFACE

BACKGROUND OF THE INVENTION

[0001] 1. Field of the Invention

[0002] The present invention relates in general to a system for data acquisition and retrieval through the use of an user interface remotely located from the control system.

[0003] 2. Description of the Related Art

[0004] Today, most commercial businesses require field employees, such as at points of sale, to fill out paper forms with data concerning individual customers or products sold/manufactured. These reports are then collected, compiled, and assimilated at a central location and filed for future access. Most modern businesses require this information to be continuously updated and that the field personnel be afforded quick access thereto in order to reduce business costs, improve efficiency, increase accuracy, and the like. Heretofore, customer or product information is primarily achieved through paper forms completed by field personnel and later possibly entered into some form of central database.

[0005] In the healthcare field, hospitals utilize a significant amount of data retrieval and acquisition, with respect to patient information. All patient information, such as patient name, date of birth, place of business, address, phone numbers, language, billing account number, social security number, drivers license number, and the like were written on paper forms and maintained in a paper file, and optionally entered by the hospital staff into a common database. Thereafter, the patient information was supplemented with information pertaining to their health condition, such as vital signs, fluid intake, fluid output and the like, which were written on different paper forms by a nurse and later keyed into this common database. Similarly, when patients undergo testing, the test results were manually keyed into the common database and/or written on forms stored in the patient's paper file.

[0006] An alternative example lies in the insurance industry in which field claims adjustors travel to the site of an insurance claim and evaluate the damaged property. These adjustors fill out multiple forms identifying the damage and the insured person's general information. For instance, in an automotive accident the claims adjustor must describe each problem with the insured car, such as dents, scratches, and the like. These forms are later processed manually or keyed into a common database, after which, the claimant ultimately is paid.

[0007] A substantial amount of data acquisition and retrieval is also utilized in factory environments. During the course of manufacturing various products, floor workers and quality review must complete multiple forms concerning a given production unit.

[0008] However, every business requiring significant amounts of data acquisition and retrieval in its day-to-day business encounter similar problems. First and foremost, a significant amount of the field operative's time is required in filling out the corresponding paperwork, in which the potential for user error exists. Also, in systems using paper forms, the information must be ultimately transferred to an electronic database, which provides a second opportunity for user error. Clearly, it would be advantageous to reduce the number of user entries, thereby reducing the likelihood of error.

[0009] Further, in many markets, field personnel at one location typically require information quickly from another field location. For instance, in a hospital environment, a doctor within the general ward may require immediate information concerning a patient from the radiology department. However, the process under which the information is written down and carried between departments is very slow. Similarly, doctors and nurses require immediate and accurate knowledge of specific procedures to be followed with regard to particular patients. Past systems for maintaining individual patient procedures have proven ineffective.

[0010] Moreover, one office within a business will typically require information from another office which must be hand carried or which is unavailable after the closing hours of the second office. For instance, hospitals require lab testing results be hand-carried to doctors who may be waiting for such results during the course of surgery. Also, typically doctors require clinical data after the clinics have closed.

[0011] The need remains in this field for an improved data acquisition and retrieval system to address the problems and drawbacks heretofore experienced. The primary objective of this invention is to meet this need.

SUMMARY OF THE INVENTION

[0012] It is an object of the present invention to provide a data acquisition and retrieval system which allows users immediate real time access to all existing customer/product information.

[0013] It is an object of the present invention to provide a data acquisition and retrieval system which affords users access to wireless remote data terminals.

[0014] It is an object of the present invention to minimize the data retrieval time by reducing the necessary information transmitted between handheld units and the corresponding communications server.

[0015] It is another object of the present invention to minimize the data necessary for transmission by synchronizing operation within each handheld unit and a corresponding communications server, such synchronization including the minimization of header information for each transmission and the transmission of a command case code used directly by the command server to access a designated database.

[0016] It is another object of the present invention to provide a user interface which minimizes user error.

[0017] It is another object of the present invention to provide a user interface which utilizes an event driven architecture to allow data entry through a touch pad.

[0018] It is another object of the present invention to provide an user interface which is easily operated by using a touch pad which presents a scroll bar, rolling keys and icons for data entry.

[0019] It is another object of the present invention is to provide an user interface which allows for the scanning of bar codes to identify particular customers or products.

[0020] These and further objects will become more apparent from the drawings and detailed description hereafter.

BRIEF DESCRIPTION OF THE DRAWINGS

[0021] The objects and features of the invention noted above are explained in more detail with reference to the drawings, in which like reference numerals denote like elements, and in which:

[0022] **FIG. 1** is a block diagram of an overview of a data acquisition and retrieval system according to the present invention;

[0023] **FIG. 2** illustrates a block diagram of a handheld interface according to the present invention;

[0024] FIGS. **3**(*a*)-**3**(*d*) illustrate exemplary display screens shown on the handheld interface according to the present invention;

[0025] **FIG. 4** illustrates the main processing loop by which the handheld interface monitors and responds to events selected by the user;

[0026] **FIG. 5** illustrates the processing sequence of the handheld interface while displaying a patient information screen;

[0027] **FIG. 6** illustrates the processing sequence of the handheld interface to initiate the patient information screen;

[0028] **FIG. 7** illustrates the processing sequence of the handheld interface while displaying a patient input screen;

[0029] **FIG. 8** illustrates the processing sequence of the handheld interface to initiate the patient input screen;

[0030] **FIG. 9** illustrates the data structure of the packets transmitted between the handheld interface and the communications server;

[0031] **FIG. 10** illustrates the processing sequence undergone by the handheld interface to write data packets to the communications server;

[0032] **FIG. 11** illustrates the processing sequence by which the communication server reads packets transmitted from the handheld interface;

[0033] **FIG. 12** illustrates the processing sequence by which the communication server parses through a short header structure within an incoming packet to build the input buffer;

[0034] **FIG. 13** illustrates the processing sequence by which the communication server parses through a long header structure within an incoming packet to build the input buffer;

[0035] **FIG. 15** illustrates the processing sequence by which the communication server generates the processing queue;

[0036] **FIG. 16** illustrates a block diagram of the RAM section of the handheld interface;

[0037] **FIG. 17** illustrates a block diagram of the communications server;

[0038] **FIG. 18** illustrates an alternative data entry display for the handheld interface; and

[0039] **FIG. 19** illustrates the processing sequence of the command server to process and transmit message lists.

DETAILED DESCRIPTION OF THE INVENTION

[0040] Overview

[0041] **FIG. 1** illustrates a data retrieval/acquisition system according to the present invention generally illustrated by the reference numeral **1**. The instant system **1** includes a master server **2** which communicates with multiple remote input units **4** through a communications bus **6**. Each input unit **4** includes a communications server **12** directly connected to a command server **14** and data bases **16**. Each remote communications server **12** interactively communicates with one or more handheld user interfaces **8** while located within a predefined region **5** proximate thereto. This interactive communication is conducted through a wireless dedicated communications channel, such as upon an infrared carrier signal.

[0042] The communications server **12** controls all interaction between the handheld interfaces **8**, the command servers **14**, and the communications bus **6**. The command servers **14** control direct access to the databases **16**. The command servers **14** may implement any conventionally known IO management system, such as Pro-Tree (version 2.0), SQL or Paradox. The communications server **12** communicates with each handheld interface **8** through a unique communications protocol (hereafter referred to as the Handheld-Server Protocol). The communications server **12** communicates with the command servers **14** through a unique protocol (hereafter referred to as the Message List Protocol).

[0043] As explained below, the communications server **12** synchronizes its operations with those of the handheld interfaces **8** to minimize the excess data necessary for each transmission therebetween. The communications server **12** and interface **8** also utilize shorthand code values to identify constantly transmitted information, such as commands, user IDs, database IDs, and the like. By synchronizing operation of the handheld interface **8** and the corresponding communications server **12**, the instant system is able to avoid the need to transmit the user ID, time, date, authorization code, and the like during every transmission.

[0044] During operation, the user enters data at the handheld interface **8**, the data is transmitted to the communications server **12** and stored internally within the database **16**. Data may also be entered directly into the communications server **12**. Similarly, the user may request data previously submitted, in which case the communications server **12** accesses the corresponding database **16**, through the command server **14**, and transmits the necessary desired information to the requesting handheld interface **8**. Throughout operation, a backup copy may be maintained within the master server **2** for every remote database **16**. Additionally, the user may request, via the handheld interface **8**, data stored within remote input unit **4** other than the than in the databases directly connected to the receiving communications server **12**. In such a circumstance, the corresponding communications server **12** would accept the request from the handheld interface **8**, determine that the desired information

is stored within a remote database and request such information through the communications bus **6** from the communications server **12** containing the corresponding database. Thus, the communications bus **6** also allows data to be transmitted between communications servers **12** and between handheld interfaces **8** (such as when one doctor is requesting information from another doctor).

[**0045**] By way of example only, the instant acquisition/retrieval system **1** may be utilized within a healthcare facility wherein doctors, nurses, and staff utilize the handheld interfaces **8** to record and obtain patient information. These persons may be assigned different privileges which would allow varying levels of access to data. In this environment, each communications server may be located within a different ward or testing laboratory. Thus, a doctor in a general ward may need to send a message to, or obtain information from, a doctor or nurse in radiology. To do so, the doctor would transmit a request through the handheld interface **8**, with the request being received and decoded in the general ward's communications server **12**. The source/receiving communications server determines the appropriate destination communications server that corresponds to the destination handheld interface, into which the destination doctor or nurse has signed on. The desired message is transmitted to the radiology server, and to the corresponding handheld interface which queries the user through audio, video, or vibrating means. In a similar manner, the user within radiology may transmit a response through the corresponding radiology and general ward communications servers **12** to the requesting doctor's handheld interface **8**. Also, lab data may be quickly transmitted to a surgeon during an operation.

[**0046**] The instant acquisition/retrieval system **1** also allows doctors, nurses, and staff members immediate access to clinical data, even after clinic hours are closed. To do so, the user merely enters a request through his/her handheld interface **8**, which is transmitted through the corresponding communications server **12** to the clinical communication's server **12**. The necessary clinical data is obtained from the clinical database and returned along the communications bus **6**. By way of example, the data acquisition/retrieval system **1** of the healthcare facility may be connected to similar systems via an ethernet connected between the master servers **2**.

[**0047**] The handheld interfaces **8** are used to enter all patient information such as personal information upon admittance, past medical histories, vital statistics throughout their stay in the hospital, and the like. For instance, these vital statistics may include systolic, diastolic, pulse, temperature, and respiratory information. Similarly, the handheld interface **8** may be used to enter information concerning the patient's fluid intake and output.

[**0048**] As will be explained below, the instant data acquisition/retrieval system **1** also allows a user to carry a handheld interface **8** between regions (see the dashed line **5** in **FIG. 1**) dedicated to each communications server **12**. Optionally, when this occurs, the handheld interface **23** is considered to have signed off with the old communications server (as illustrated by the dashed line **22**). Thereafter, the handheld interface **23** must be signed onto the new communications server (as illustrated by the line **24**) before it may be used for data entry.

[**0049**] The manner by which these objects and functions is achieved will become clear in connection with the following explanation of each module of the present invention.

[**0050**] Handheld Interface

[**0051**] **FIG. 2** generally illustrates a block diagram of a handheld interface **8** having a display screen **30** which may be back-illuminated and which is controlled by a CPU **32** to display desired information thereon. The display screen **30** also functions as a touch pad and is sensitive to user contact. When contacted, the display screen **30** outputs a signal to the CPU identifying the exact location of the contact therewith. The handheld interface **8** further includes a memory module **34** which stores software to control processing of the CPU **32** and which temporarily stores data received from, and transmitted to, the corresponding communications server **12**. The CPU **32** controls an IR interface **36** to control data transmissions to and from the communications server **12**. A bar code reader **37** is included to allow the user to enter customer or product information from a bar code, such as customer/patient ID and the like.

[**0052**] As explained below, the handheld interface **8** operates as an "event driven" device wherein the touch screen **30** is drawn to display a desired arrangement of virtual regions. Each region is assigned a unique identifier. The handheld interface **8** recognizes each contact by a user as an event. The contact/event is recognized with respect to the correspondingly defined region and the region identifier is returned. Thereafter, the CPU **32** identifies the necessary course of action based upon this identifier.

[**0053**] As illustrated in **FIG. 3**, during operation the CPU **32** may display a variety of menus, graphs, and the like upon the touch screen **30**. Within each display, the CPU **32** defines virtual regions which correspond to predefined processing sequences. The user initiates a desired event sequence by contacting the preferred region corresponding to the event. To facilitate the user interaction therewith, the CPU **32** provides multiple manners in which the user may enter and retrieve data. As illustrated in **FIG. 3**(*a*), the CPU **32** draws a main menu **38** on the screen **30** and defines multiple menu selections **40** therein (see the flowchart of **FIG. 10**). Each menu selection **40** overlays and corresponds to a virtual event region **42** corresponding to a different event/case. Every screen **30** is displayed with an escape key **43** which allows the user to escape back to a previous function/screen or back to the main menu.

[**0054**] When implemented in a healthcare application, as illustrated in **FIGS. 3***a*-**3***d*, when the user selects a vitals event region **44**, the CPU **32** recognizes it as such and processes a corresponding event sequence (see **FIG. 13**).

[**0055**] As illustrated in **FIG. 3***c*, the vitals input screen **60** displays current patient information in the patient field **62**, such as the patient's name, social security number, status, and the date upon which the vitals were last updated. The vitals input screen **60** illustrates the last current vitals as shown in the systolic field **46**, diastolic field **48**, pulse field **50**, temperature field **52**, and respiratory field **54**. The touch screen **30** allows the user to go activate a desired vital sign field by selecting a corresponding icon **46**, **48**, **50**, **52**, and **54**, respectively. Located immediately above each icon is the current value for the corresponding vitals field. This current value is also displayed within three rolling keys along side

of the icon (the rolling keys are designated by the reference numeral **56**). The patient's systolic vital sign field is active in **FIG. 3***c*, as evidenced by the inverted rolling keys **56**. Proximate the rolling keys **56** is a scroll bar **58** for illustrating in a bar format the current value of the active vital sign field (i.e., systolic) which is inverted to the current level (**130**).

[**0056**] To enter new patient vitals, the user may do so in multiple ways. First, the user may update the patient's systolic vitals by consecutively contacting each rolling key **56** to be incremented. Each rolling key continuously increments, such as from 0 to 9 and then back to 0. Alternatively, the user may enter patient vitals information by contacting the scroll bar **58** at the desired position. In accordance with the flowchart of **FIG. 13**, when the user contacts the scroll bar **58**, the bar is updated to reflect the newly entered value. If the user drags his/her finger along the scroll bar **58**, the CPU **32** will continuously update the level thereof to reflect this movement of the finger. The CPU **32** updates the corresponding rolling keys **56** for the active field (i.e., the systolic field as illustrated in **FIG. 3**(*c*)). The user may drag his/her finger across the scroll bar **58** until the desired value is displayed in the rolling keys **58**, at which time the user releases the scroll bar. The user may activate a different vital sign field (i.e., change the mode) by selecting the corresponding icon (**46**, **48**, **50**, **52**, and **54**).

[**0057**] The vitals input screen **60** further includes change function keys **64** which afford the user's direct access to displays, graphs, screens and the transmit function. More specifically, the vitals input screen **60** allows the user direct access to the fluids input screen (not shown) for the current patient by pressing the fluids function button **66**. Alternatively, the user may view the selected vital sign field (e.g., systolic field) in a graph format by selecting the view graph button **68**. The vitals input screen **60** further includes a transmit information button **70** which the user selects once a patient's new vital information has been entered. When the transmit button **70** has been pressed, the CPU **32** transmits the updated patient information to the communications server **12** in a format described below.

[**0058**] **FIG. 3**(*b*) illustrates a graph corresponding to the present patient's systolic vitals which is displayed when the view graph button **68** is selected.

[**0059**] **FIG. 3**(*d*) illustrates a patient inquiry screen **74** selected from the main menu **38**. The patient inquiry screen **74** displays a scrolling text window **78** which exhibits the currently selected patient's name and those names alphabetically proximate thereto. Along one side of the scroll text window **78** is positioned a scrolling bar **80** which includes an identifier **82** designating the position of the currently selected patient's name within a master alphabetical list. The user may scroll through the patient list by contacting the scrolling bar **80** at a desired location therealong. The top and bottom of the scrolling bar **80** corresponds to the beginning and end, respectively, of the list of patient names stored within the handheld interface **8**.

[**0060**] The patient inquiry screen **74** also includes a virtual keypad **76** which allows the user to enter the name of a desired patient. As the user selects each letter of the desired patient's name, the CPU **34** automatically performs a search upon the entered letters and updates the scroll text window **78** correspondingly. As the user enters additional letters, the CPU **32** concatenates these letters to the end of the search string it uses and again updates the scrolling text window **78**. The patient inquiry screen **74** also includes function buttons **64** along a bottom thereof to allow the user to automatically jump to an alternative screen. A scan button **77** is included to allow the user to read bar code data from a patient's wrist band, such as patient ID.

[**0061**] **FIG. 18** illustrates an alternative scroll bar implementation which may be used to allow the user to enter alphanumeric information. For instance, the CPU **32** may control the display screen **30** to illustrate a display field **90** and one or more scroll bars **92**. The scroll bar **92** may be defined such that one end corresponds to the letter A while the opposite end corresponds to the letter Z. The CPU **32** would define multiple regions along the length of the scroll bar **92**, each region corresponding to one letter of the alphabet. When the user contacts the scroll bar **92**, a letter corresponding to the touched region is displayed in a first location **94** of the display field **90**.

[**0062**] As the user drags his/her finger along the scroll bar, the letter displayed within the first location **94** will vary corresponding to the currently selected region. Once the user removes his/her finger from the scroll bar **92**, the last identified region is designated as the correct letter and entered in the first location **94** of the display. When the user again contacts the scroll bar **92**, the CPU **32** operates to display a corresponding letter in the second field location **96** of the display field **90**.

[**0063**] If it is desirable to enter numerals within the display field **90**, the CPU **32** may also draw a second scroll bar **98** upon the display screen **30**. The first end of the second scroll bar would represent a 0 while the second end of the scroll bar **98** would represent a 9. The user would enter numerals in the display fields **90** in the same manner as discussed above with respect to letters. Optionally, a single scroll bar may be provided for letters and numerals with function buttons **100** and **101** being used to assign letters or numerals to the scroll bar.

[**0064**] **FIG. 15** illustrates the RAM section **35** of the memory within the handheld interface **8**. The RAM memory **35** includes a patient information section **200** for storing a list of patient names and patient identifiers associated with the present user of the handheld interface **8**. The RAM memory **35** also includes a working space **202** for storing all other information entered by the user and transmitted between the handheld interface **8** and the communications server **12**. Each time the CPU **32** transmits a request to the communications server **12** for patient information, the CPU **32** redefines the current data structure within the working space **102** to correspond to the expected format of the return data from the communications server **12**.

[**0065**] By way of example only, when the CPU **32** requests patient vitals, it expects the returned data to include, in a preset order, the patient's social security number, date on which the patient vitals were last updated, and the most recent systolic, diastolic, pulse, temperature and respiratory values. The CPU **32** sets up fields within the working space **202** for each of these values. When the returned data is received, the CPU **32** parses through the returned packet and assigns bytes therefrom to the desired field in the working space **202**.

[**0066**] The RAM **35** further includes a temporary buffer for storing incoming and outgoing packets of information

which are to be transmitted to and which are received from the communication server **12**. The CPU **32** moves data from the RAM **35** into the temporary buffer **204** immediately before transmitting this information and adds a packet header **206** thereto.

[**0067**] FIGS. **4-8** illustrate the processing sequence by which the CPU **32** controls the main menu, vital sign patient input screen and the patient information screen (**FIGS. 3***a*-**3***d*).

[**0068**] Generally, during operation the CPU **32** loops through one of two primary case/event handling loops (**FIG. 4**). The first case/event loop operates to draw the main menu (**FIG. 3***a*) and to handle events chosen from the main menu. When an event occurs which corresponds to a defined key region within the main menu, a corresponding event identifier returned as the calling identifier. A return code is set equal to this calling identifier and the return code is checked against a predefined value (0). If the return code is non-zero, processing flow enters the second primary loop to call the corresponding event handling function. The second primary loop corresponds to processing in which a menu other than the main menu is displayed (**FIGS. 3***b*-**3***d*). During this second loop, a code which identifies the next function to be performed is continuously checked. When the code equals zero, processing returns to the main loop. When the code is a nonzero value, the corresponding function is called. Once each function is completed it returns a code identifying the next function to be performed by the user. This configuration reduces the memory requirements by reducing the levels of functions to be called, thereby reducing the necessary stack space.

[**0069**] **FIG. 4** generally illustrates the processing undergone by the handheld interface **8** when the user initiates the first session (i.e., when the user first logs in). When a session is initiated the handheld unit prompts the user for the user's ID and password (step **1602**). Next, a packet is constructed in the temporary buffer **204** which contains a long header **206** structure and having a data section including the user ID and password (step **1604**). This packet is transmitted (step **1606**) and a validation code therefor is waited upon. If the validation code is not received (step **1608**) processing returns to step **1602** in which the user is reprompted for the ID and password. If a validation code is received, processing continues to step **1610** in which a return code is set to indicate that processing should move to the patient inquiry module. Thereafter, the return code is tested to determine whether it equals zero (step **1623**). If the return code equals zero, processing returns to step **1614** in which the main menu is redrawn.

[**0070**] After this initial login sequence is completed, flow enters the main event handling loops. First, a main menu is drawn and key regions therein are defined in steps **1612** and **1614**, after which the system waits for an event to occur (step **1616**). Once an event occurs, it is determined whether the event is within a defined menu region **42** (step **1618**) (i.e., whether the use has touched the display screen **30** at a location corresponding to a menu selection **40**). If not, processing loops back to wait for the next event. If so, an event identifier is obtained for the key region in which the event occurred (step **1620**). Next, an event handling function corresponding to the event identifier is called (step **1622**). Thereafter, processing waits for a call identifier returned from the called event handling function. A return code is set equal to the call identifier (step **1623**) and the return code is tested in step **1624** and if zero, processing returns to the initial step **1612** to redefine and redraw the main menu. If the return code does not equal zero, the process determines that the user has selected another function besides displaying the main menu. Thus, the event handling function corresponding to the non-zero return code is called (step **1626**). Thereafter, the main event handling loop waits for the called function to return a call identifier which is tested in step **1624**.

[**0071**] **FIGS. 5 and 6** illustrate the process undergone when the patient information screen **74** is selected to be displayed (such as during the wake up function or when called by the user). First, an initialization routine is called in step **1700** (steps **1710-1720** in **FIG. 6**). This initializing process begins by determining whether the handheld interface **8** includes a list of patient names and IDs (step **1710**). If this list does not exist (such as when the handheld interface has initially been woken up), the unit constructs and transmits a packet to the communications server **12** requesting the patient list associated with the currently signed in user (step **1712**). The communications server **12** receives this packet, identifies the user ID, and requests the appropriate information from the command server **14**. Thereafter, the appropriate database **16** is read and the patient list for the user is transmitted back to the handheld interface **8**. After the interface **8** sets up the data structure in the patient memory **200** for the patient list (step **1714**), it waits for the returned patient list (step **1716**). Once the patient list (name and ID) is received, it is stored in the patient memory **200**.

[**0072**] The handheld interface **8** may not include sufficient display space in the scrolling text window **78** to show an entire patient's name. Thus, the patient memory section **200** will only include sufficient memory to store the maximum number of characters which may be displayed for a single patient name upon the screen. Once the patient list is stored, the patient screen format is displayed (step **1718**) as illustrated in **FIG. 3***d*. Next, the patient names are displayed in the scrolling text window **78** (step **1720**) (**FIG. 3***d*). When the patient list is too long to be completely displayed within the scrolling text window **78**, a default portion thereof is displayed. Next, the system waits for an event (step **1722**, in **FIG. 6**) and when one occurs, an event identifier is assigned thereto.

[**0073**] The event identifier is passed to a case/event statement which includes every possible valid value for the event identifier. By way of illustration, processing will continue along one of six possible processing paths to blocks **1724**, **1726**, **1728**, **1730** or **1750**, depending upon which event occurred. When event **1724** occurs (i.e., the user presses the escape icon), the system returns a zero calling identifier to the main loop (thereby indicating that no new event handling function has been selected). If the event indicates that the user has touched the scrolling bar **80**, processing flows to box **1726** in which the system determines the exact location of the event (step **1732**). This location is correlated with a pointer that is used as an index into the patient list to identify the new patient to be displayed in the scrolling text window **78**. Once the event location is determined, the pointer into the patient list is updated and the scrolling text window **78**

is redrawn to display the name of the selected patient and a limited number of patient names surrounding the selected name (step **1734**).

[**0074**] Next, the scrolling bar **80** is updated to move the identifier **82** to a new position identifying the relative location of the indexed patient within the overall patient list (step **1736**). Thus, if the first patient is selected, the identifier **82** is redrawn at the top of the scrolling bar **80**, and if the last patient is selected, the identifier **82** is drawn at the bottom of the scrolling bar **80**. If the event is identified as occurring within the scrolling text window **78**, processing flows to step **1728**. Specifically, the location of the event is again identified (step **1738**) relative to the names currently displayed. The name closest to the event is identified as the selected patient. Thereafter, the pointer into the patient list is updated to index the newly selected patient name (step **1740**). This name is displayed in the center of the scrolling text window and, optionally, may be inverted in color (step **1740**). The identifier **82** within the scrolling bar **80** is also redrawn to properly identify the new position of the selected patient within the patient list (step **1740**).

[**0075**] If the keypad **76** is touched, processing flows to block **1730**, at which the letter is identified which corresponds to the region touched (step **1742**). This selected letter is added to a temporary patient searching string within the work space memory **102** (step **1744**). This letter is added to a search string (which is empty until the first letter is selected). Thereafter, the processor conducts a search based upon the search string into the patient list to identify the name most closely corresponding to the letter(s) selected from the virtual keypad **76** (step **1746**). If a search string exists (i.e., the user has already entered some letters) the newly selected letter is concatenated onto the search string and a new search is conducted upon the text strings within it, the patient list to find the first text string which is greater in alphabetic value than (i.e., closest to) the search string. The pointer is set to the closest patient name and the scrolling text window **78** and the scrolling bar **80** are updated (steps **1746** and **1748**). If the user wishes to delete a letter from the search string, he/she simply pressing the delete region key.

[**0076**] If the user selects the scan region **77**, processing flow moves to block **1750**. The bar code scanner is read to obtain the bar code scanned by the user (step **1752**) (this bar code may appear on a patient's wrist band and the like). The bar code includes the patient ID, which is used to find the patient name within the patient list (step **1754**). Next, the pointer into the patient list is updated (step **1756**) and the scrolling text window **78** and scrolling bar **80** are redrawn (step **1758**).

[**0077**] Once the user has selected a desired patient, the user may escape from the patient inquiry screen by pressing the escape icon **43** in the upper left corner or by selecting one of the function **64** buttons at the bottom of the screen (step **1760**). As illustrated in **FIG. 3**d, the user may escape to the main menu, review a patient's information complete record or review the patient's vitals. If the user presses one of the change function buttons **64** at the bottom of the screen, the corresponding event identifier is evaluated to determine which function key the user has selected (step **1762**) and the corresponding return code is returned to the main processing loop in **FIG. 16** (step **1764**).

[**0078**] **FIGS. 7***a*, **7***b* and **8** illustrate the processing sequence undergone by the handheld interface **8** when the vitals input handling function is chosen (i.e., when a user desires to enter patient vitals). First the display screen is cleared (step **1800**) and the vitals/format is drawn upon the screen (step **1802**). Similarly, the key regions are defined which correspond to each even identifier. Next, it is determined whether the workspace memory contains vitals for a selected patient (step **1804**). If not, the processor constructs and transmits a packet (step **1806**) requesting patient vitals. Thereafter, the workspace memory **202** is set up in the data structure corresponding to patient vitals (step **1808**). Thereafter, the handheld interface waits for the returned patient vitals, receives these vitals in one or more packets and disassembles the packets and stores the patient vitals in the workspace (step **1810**). Next, the processor draws the patient vitals onto the screen (step **1812**) and sets the default mode to a predetermined field (e.g., systolic field). The vitals for the default field are drawn into the scroll bar (step **1814**) and the default rolling keys **56** corresponding to the default field are inverted. Thereafter, the handheld interface waits for an event to S occur (step **1816** in **FIG. 7***a*) and when it occurs, identifies the event number corresponding thereto.

[**0079**] Processing flows along one of six paths depending upon which event number is identified. While each field upon the vitals screen corresponds to a separate event number, the events as displayed in **FIG. 8** may be grouped into six general categories, namely, touching a roll key, touching the icon, touching the scroll bar, touching the patient's general information, touching the escape key, and touching the change screen buttons (blocks **1818**, **1830**, **1840**, **1852**, **1858** and **1864**). Once the event number is identified as corresponding to a rolling key **56**, it is determined whether the touched rolling keys are active (step **1819**). If not active, processing returns to step **1816**. If active, a pointer is determined which identifies the field within the workspace memory **202** which corresponds to the specific roll key/vital sign selected (step **1820**).

[**0080**] Next, the data value identified by the pointer into the workspace is incremented by a 1, 10, 100, etc. depending upon the rolling key which was touched (step **1822**). Thus, referring to **FIG. 3***c*, if the user presses the center rolling key corresponding to the systolic field, the systolic data value within the workspace memory will be incremented by 10. Similarly, if the diastolic field is selected and the user presses the leftmost rolling key therein, the processor will increment the diastolic data value within the workspace memory by 100. Next, it is determined whether or not the incremented value has created an overflow and if so, the incremented digit is rolled-over (step **1824**). This rollover function is performed to rotate a rolling key having a current value of 9 to a new value of 0.

[**0081**] Thus, if the user selects the pulse vital and contacts the "1s" rolling key (which has a present value of 9), the processor will update the pulse value within the workspace memory to "80". Thereafter, the new vital sign is drawn into the rolling keys **56** which have been updated and the new vital sign is stored in the corresponding field in the workspace memory (step **1824**). Finally, the processor updates the scroll bar **58** to reflect the change in the current data value (step **1826**).

[**0082**] If the event identified in step **1816** corresponds to an icon, processing proceeds to step **1830**. First, the rolling

keys are deactivated for the previously active vital sign field (step **1832**) and the rolling keys for the newly chosen vital sign are activated (step **1834**). Next, the rolling keys for the deactivated and newly activated vital sign fields are inverted to display the newly active field to the user (step **1836**). Thereafter, the scroll bar **80** is redrawn with parameters, ranges and current vital signs corresponding to the newly selected vital sign field (step **1838**).

[**0083**] When the identified event corresponds to touching the scroll bar **80**, process flows to step **1840**. Once the scroll bar is touched, the exact location of the event is determined therein and used to identify the corresponding vital sign value (step **1842**). Then, a pointer is determined which identifies the vital sign data value within the workspace memory which corresponds to the active vital sign field (step **1844**). This vital sign data value is updated to the new vital sign value selected within the scroll bar (step **1846**). Thereafter, the active scroll keys are updated with the new data value (step **1848**) and the scroll bar is inverted to reflect the new data value (step **1850**). When the event occurs within the patient information region, processing flows to step **1852**. In such a case, the patient information screen is redrawn. To do so, a calling identifier is set to correspond to the patient information screen (step **1854**) and control is returned to the main loop (step **1856**).

[**0084**] Optionally, when the user touches the patient information region, a pop-up window may appear and query the user as to whether it is desirable to go to the patient information screen or enter a patient identifier through the bar code reader. In either case, if the user touches the patient information region, before new patient vital signs have been transmitted to the communication server, the user is prompted as to whether or not these vital signs should be transmitted. When the escape icon is touched, processing flows to step **1858**, after which the calling identifier is set to zero (step **1860**). Processing is returned to the main loop (step **1862**).

[**0085**] If the screen changing buttons are touched, processing flows then to step **1864**, after which the selected button is determined (step **1866**). In step **1867**, it is determined whether the event corresponds to the transmit button. If the selected button corresponds to the transmit button, the current patient vitals are constructed into a packet format and transmitted to the communication server **12** (step **1868**). If the selected button does not correspond to the transmit button, the calling identifier is set equal to the newly selected screen (step **1870**). Thereafter, control is returned to the main loop (step **1872**).

[**0086**] When the return code within the main loop is set to correspond to the view graph display screen (**FIG. 3***d*), the processor determines the active vital sign field (e.g., systolic field), and obtains the corresponding default parameters for the graph. Thereafter, the screen is cleared and a graph having the parameters for the active vital sign field is drawn. Next, the vital sign data values for the active vital sign field are read from the workspace memory and used to draw the graph.

[**0087**] Optionally, in the view graph screen a series of changing function buttons may be displayed along the bottom thereof. These buttons would allow the user to automatically select another vital sign to view in a graph format without intermediately returning to the vital input screen.

[**0088**] In accordance with the above procedure, the handheld interface **8** allows for user inputs and displays patient information to the user.

[**0089**] Interface-Server Protocol

[**0090**] Once the user enters the desired data and wishes to send this data to the communications server **12**, the user presses the transmit function button **70**. Once the CPU **32** identifies that an event has occurred which corresponds the transmit function button **70**, the main loop (**FIG. 4**) calls the transmit handling function. **FIG. 4** illustrates the process by which the CPU **32** transmits data Ad to the communications server **12**.

[**0091**] As illustrated in **FIG. 9**, each transmission comprises an information packet **300** of IR signals corresponding to a packet of data, wherein every packet is constructed with the same predetermined length (e.g., 128 bytes) and in one of two formats. This length is software and operative system definable and may vary. Certain messages transmitted between the handheld interfaces **8** and the corresponding communication servers **12** comprise an amount of data which is unable to be assembled into a single packet. Thus, in such circumstances the transmitting device segments the data into a plurality of equal length packets **300** (referred to as frames). The series of frames form a message **302**.

[**0092**] When transmitting a message the first packet/first frame thereof is constructed with a header section **304** formed in a long header structure followed by a data field **306**. The long header **304** includes a 4 byte command field **308**, a 6 byte user identifying field **310**, and a 4 byte message total field **312**. The command field **308** identifies the process to be performed upon the subsequent data, the user ID identifies the user signed into the handheld interface **8** transmitting or receiving the packet **308** and the message total **312** identifies the total length of the message which will follow. This total length includes all bytes within subsequent packets **300** corresponding to this specific message **302**. Thereafter, a data field **314** (having 114 bytes in a packet with a 128 byte structure) follows.

[**0093**] If the message includes more data than will fit in a file single packet, subsequent packets/frames are transmitted. These subsequent packets/frames are constructed with a short header structure **316** preceding the data segment **318**. The short header **316** includes a 4 byte command **320** and a 4 byte packet **322** identifying number to enable the receiving device to determine the position of the packet within the overall message. Packets containing a short header **316** include a 120 byte data field for a packet formed with 128 bytes. During transmission, the first packet of each message includes a long header **304** structure followed by a data field, with each subsequent packet within the message including a short header **316** instructed followed by a data field. In this manner, the device is able to increase the amount of data transmitted within each packet for long messages. The transmitting device need not send the user ID and the message total more than once for a given message since the receiving device is able to associate corresponding packets with a single message **302** based on the packet number **322** and communication channel.

[**0094**] To transmit a message (**FIG. 10**), the CPU **32** reads the current data from the workspace memory **200** in the RAM **35** (step **400**). Next, the CPU **32** determines the length

of the message and the ID of the user signed in to that handheld interface **8** (step **402**). The CPU **34** constructs a packet header formed with the long header structure (step **404**). The CPU **34** clears the packet number (step **406**) and writes the data to the transmit buffer (step **408**). If the packet is full (step **410**), the CPU **32** transmits the packet and clears the buffer (step **412**). If the packet is not full, it determines if more data exists to write to the buffer (step **414**). If no more data exists, it transmits the packet. If more data exists, it against writes to the packet. In step **416**, it is determined if more data exists, and if not it exists. If so, the packet number is incremented (step **418**). Next, the CPU **34** constructs a partial short header for the second frame to be transmitted in this message (step **420**). The partial header includes the code for the corresponding command and the current packet number. Thereafter, the next segment of data is written to the packet (step **408**) and steps **410** through **420** are repeated. Once the last packet is transmitted (step **414**) and it is determined that no more data remains to be written to the packet (step **416**), the system exits the transmit routine (step **422**).

[**0095**] Communication Server

[**0096**] **FIG. 16** illustrates a block diagram of the communication server **12**. The communication server **12** includes an IR receiver\transmitter **100** which receives and transmits IR communication packets from and to the handheld interface **8**. The IR receiver transmitter **100** operates in conjunction with an I/O card **102** to store a packet of information from each communication channel in the corresponding address with a temporary buffer **104**. Each communication channel corresponds to a unique handheld interface **8**. For instance, the communication server **12** may provide for 128 IR channels and thus, the temporary buffer **104** will include 128 buffer locations, with each buffer location having sufficient memory to store a complete IR packet **300** (**FIG. 9**). The number of channels is locally definable and may be any desired number. The array locations within the temporary buffer **104** store the IR packets in the format transmitted from the handheld interface **8** as described above.

[**0097**] The temporary server **12** further includes an input buffer **108** which represents a storage space used by the CPU **106** when converting packets from the format stored in the temporary buffer **104** to message lists with a different format to be transmitted to the command servers **14**. The input buffer **108** represents an array, each element of which includes the COM_INFO structure (explained below)

[**0098**] Each element of the input buffer **108** array is accessed based on the device number. Thus, if 128 handheld interfaces **8** are being used, the input buffer **8** will include 128 elements.

[**0099**] The communications server **12** further includes a message buffer **110** which is utilized to store the actual data for each complete message sent from the hand held interface once all of the necessary packets have been transmitted by the handheld interface **8** and reassimilated by the CPU **106** into a single message. The COM_INFO stored in the input buffer **108** includes a pointer MSG_From_HH into the message buffer to the beginning of the corresponding data string. Once every packet **300** for a message **302** is received and the corresponding data is stored in the message buffer and the COM_INFO is stored in the input buffer **108**, the CPU **106** constructs a message list therefrom. Each message list to be processed by the command server **14** is stored on one of a process queue **114**. The message list includes a pointer to the corresponding data string in the message buffer **110**. Each message list received from the command server **14** is initially stored in a transmit queue **116** prior to being converted back into packets **300** and transmitted to the handheld interface **8**. The message list includes a pointer to a corresponding data string which is stored in the message buffer **110** when it is received from the command server **14**.

[**0100**] The process and transmit queues are operated in a first-in-first-out sequence such that each message is processed or transmitted in the order in which it is placed in the queue. The transmit and process queues **112** and **114** constitute dynamic queuing systems which attach message lists in a linked list structure. Each message list include the data structure illustrated below:

MESSAGE LIST					
COM_ INFO 10	Data File (Integer)	Command (1)	MSG_TO_HH (Pointer)	MSG_LEN (Long Integer)	Prev MSG_LST (Pointer)

[**0101**]

COM_INFO							
Device Number 2 (Interger)	CMD (4)	Packet Number (Long Integer)	User ID To (6)	User ID From (6)	MSG Total (Long Integer)	MSG Length (Long Integer)	MSG From HH (Pointer)

[**0102**] The message list data structure includes a first section COM_INFO dedicated to, and containing information concerning, messages received from the handheld interface **8**. The next four fields represent fields which are created immediately before transmitting a message list to the com-

mand server **14** and another communications servers **12**. The final field (Previous MSG_LST) is used as a pointer to the subsequent message list within the queue to be processed. The first section COM_INFO includes a device number uniquely identifying the handheld interface transmitting the message. The device number is generated by the I/O card **102** when the CPU **32** requests a packet **300** from the temporary buffer **104**. The device number is produced depending upon the communications channel being accessed. The command (CMD) includes the structure of the CMD field transmitted in the header of each packet **300** (i.e., the 2 byte database ID, 1 byte command ID and 1 byte reserved).

[**0103**] The command (CMD) represents the command to be processed in accordance with the corresponding message being transmitted to or from the handheld interface **8**. The 4 bytes within the command are separated such that the first two bytes identify the database to be processed when performing the command, the third byte stores a number corresponding to the specific command to be performed, and the fourth byte is reserved. By way of example, with respect to the third byte, numerals **1-127** represent commands to be processed by the command server, while numerals **128-255** represent to a command from the handheld interface **8**. As noted above, the use of shorthand code numbers for specific commands reduces the amount of data to be transmitted to and from the handheld interface **8**.

[**0104**] The Packet Number is a long integer which is incremented each time a packet is appended to a message on the input buffer **108**. The User_ID_To is a 6 byte value added by the handheld interface **8** to identify a destination user. If set to zero, the destination is the communications server. The communications and command servers determine which server to send the command to. This value if non-zero will identify the user of a handheld interface **8** desires to communicate therewith. The User_ID_From is a 6 byte value added once at login time. This user ID is assigned to the channel to identify who is logged in at that channel. This value is maintained until the person signs out. Thus, the user ID will only be transmitted once during a login session. The communications server **12** keeps track of each User ID signed onto handheld interfaces served by that communications server **12**. The message total length (MSG_Total) is a value assigned by the handheld interface **8** or by the command server **14** when a message is transmitted. The message length (MSG_LEN) is a value updated by the short and long header parsing functions to keep track of the length of a message in the message buffer **110** as the packets for the message is added thereto. The message length field is initially tested by the communications server **12** when processing each packet in the temporary buffer **104** to determine if the packet is in a long or short header form. The message pointer field (MSG_From_HH) is a pointer into the message buffer to the location of the actual data message. The MSG_From_HH pointer is updated each time a new packet is appended to a message.

[**0105**] The message list structure includes the above COM_INFO structure as in additional to a Data_File field that represents an integer identifying the database, written from the COM_INFO structure, to be processed in connection with the corresponding command. The command (CMD) field represents a one byte command, written from the COM_INFO structure, to be processed. The MSG_To_HH field represents a message pointer used to point to the data compiled by the command server in connection with this message which will ultimately be sent to the handheld interface **8**. The MSG_LEN field represents a long integer identifying the current length of the data corresponding to the message and stored in the message buffer. The Previous_MSG_LST represents a pointer pointing to the next message to be processed. The previous message pointer enables the system to accomplish dynamic queuing for the process and transmit queues.

[**0106**] **FIG. 11** illustrates the processing sequence by which the communication server **12** receives messages from the handheld interface **8**, processes these messages and transmits these messages to the command server **14**. First, the I/O card **102** is initialized, along with the communication channels, buffers and queues (step **700**). Next, the data structures for the message list, COM_INFO, CMD, and short and long headers are set up (step **702**). A current channel to be read by the I/O card **102** is initialized to the first channel (step **704**). Next, the current channel is tested to determine whether data is being transmitted thereon from the corresponding handheld interface **8** (step **706**). If data is present, the packet of transmitted data is read and stored in the temporary buffer **104** (step **708**). The packet of data is stored within the temporary buffer **104** at the array address corresponding to the current channel. A channel identifying number corresponding to the transmitting handheld interface **8** is also assigned thereto by the I/O card **102**.

[**0107**] Next, a check sum field within the data packet is tested to determine whether the transmitted data is valid (step **710**). If the data is invalid, the communication server takes the necessary corrective actions (step **712**). If the data is valid, the CPU **106** requests the channel number (step **714**) and the packet **300** from the I/O card **102** and utilizes the channel number to index the correct corresponding element within the input buffer **108**. Next, it is determined whether a packet is an initial frame or a subsequent frame of a message (step **716**). To effect this test, the message total field, within the element of the input buffer **108** corresponding to the current channel, is read and compared to zero. If the message total field equals zero, then a packet has not yet been written to this element of the input buffer **108**. Thus, the packet being read is identified as an initial packet which will include the long header structure. Otherwise, the packet is identified as one containing the short header structure. In either case, the packet number is incremented within the currently indexed element of the input buffer **108**.

[**0108**] If the packet contains the long header structure, processing moves to step **718** in which the parse long header function is invoked. If the packet includes the short header structure, processing moves to step **720** where the parse short header function is invoked.

[**0109**] **FIG. 12** and **FIG. 13** illustrate the parse long and short header functions. Within the parse long header function, the first four bytes of the data packet within the temporary queue is read as the command (step **722**). This command is compared with a list of valid commands and if the command is invalid the processor takes the necessary corrective action (step **724**). If the command is valid, the command is written to the command field within the element of the input buffer **108** indexed by the corresponding channel number (step **726**). Next, the subsequent six bytes of the

packet within the temp buffer is read as the user ID, if present, of the destination user for the attached message/data. This six byte ID is stored in the user ID_To field of the element within the input buffer **108** indexed by the current channel number (step **728**). The User ID, corresponding to the signed on user, is added to the UserID_From field of the indexed element.

[**0110**] Next, the subsequent four bytes are read from the packet within the temporary buffer **104** as the total length of the following message (e.g., the total number of bytes to follow within one or more packets corresponding to the present message) (step **730**). The four byte value representing the message total is N converted to a long integer (step **732**) and assigned to the message total field within the element of the input buffer **108** indexed by the current channel number (step **734**). Thereafter, the data section within the packet is written to the message buffer as a data string and the length thereof is stored within the message length field within the presently indexed element of the input buffer **108** (step **736**).

[**0111**] A message pointer pointing to the data string within the message buffer **110** is stored within the message pointer field of the indexed element within the input buffer **108** (step **738**). Finally, the element of the temporary buffer **110** is cleared (step **740**). In this manner, steps **718-740** parse through a packet having a long header structure, create the COM_INFO structure within the input buffer **8** and store the message **302** from the handheld interface **8** within the message buffer **110**.

[**0112**] Returning to **FIG. 11**, if in step **716** it is determined that the packet is not an initial packet, then the short header function is invoked (see **FIG. 13**). First, the first four bytes of the packet are pulled (step **742**) and compared with the value in the command field of the currently indexed element within the input buffer **108** (this command is indexed based on the channel number) to determine if these commands are the same (step **744**). If not, the system takes the necessary corrective actions (step **746**). If the commands correspond, the packet number within the short header is pulled (step **746**), converted to a long integer (step **748**) and compared to the packet number (plus one) within the indexed element of the input buffer **108** (step **750**). These packet numbers must correspond to ensure that the received packet is the next packet to be added to the input buffer **108**. If the packet numbers correspond, the present packet is identified as part of the message corresponding to the presently indexed element within the input buffer **108** and processing flows to step **752**, else it returns. If the packet is not matched based on above criteria, then a corrective action is taken.

[**0113**] Next, the data within the temporary buffer **110** is pulled (step **752**) and the portion of the message already stored in the message buffer **110** is read (step **754**). The new data is added to the end of the stored message and the new total string is rewritten to the message buffer **110** (step **756**). The message pointer (MSG_From_HH) and the message length (MSG_LEN) are updated within the corresponding fields of the COM_INFO of the indexed element of the input buffer **108** (step **758**). Thereafter, the control returns to the main process (step **760**).

[**0114**] Referring to **FIG. 11**, once control is returned to the main program, the current channel is incremented (step **760**). Next, it is determined whether all channels have been checked (step **762**). If so, control is set to the processing sequence (at point A). If all of the channels have not been checked, control returns to step **706**. This process is continuously performed until all of the channels have been checked thereby transferring all packets of data from the temporary buffer **104** to the input buffer **108** and message buffer **110**.

[**0115**] Next, processing moves to the processing queue sequence (**FIG. 14**) to move completed messages **302** to the processing queue **112**. First, the current element pointer into the input buffer **108** is set to the first input buffer element (step **800**). Then, it compares the message total length (MSG_Total) with the message length (MSG_LEN) to determined whether a complete message corresponding to the current element within the input buffer **108** has been received and stored in the message buffer (step **802**). If not, the incomplete message remains on the input buffer **108** and the current element pointer is incremented (step **804**) and the process returns to step **802**.

[**0116**] If the complete message for the current element has been received, the message is placed on the processing queue (step **806**) by creating a message list therefor. To do so, the command information (COM_INFO) of the current element of the input buffer **108** is written to the processing queue **112** and stored in the command information (COM_INFO) section therefor. As the corresponding message represents a transmission from the handheld interface **8** to the command server **14**, the next four fields of the indexed message list element in the processing queue remain undefined. This message list is "pushed onto the back" of the processing queue by storing, in the preceding message list in the processing queue, a pointer to the current message list. This pointer is store in the final field (Previous_MSG_LST) within the previous, most recent message list added to the processing queue (step **806**).

[**0117**] Once the command information has been moved to the processing queue, the corresponding element of the input buffer **108** is cleared (step **808**). Thereafter, the current element pointer into the input buffer **108** is incremented (step **810**) and it is determined whether or not every element of the input buffer **108** has been tested (step **812**). If not, processing returns to step **802** and the next element within the input buffer **108** is processed. If processing is done on the input buffer **108**, control moves to the process the message lists on the processing queue.

[**0118**] The first element of the processing queue is tested to determine whether a command is stored therein (steps **900** and **902**). If a command exists on the processing queue, this command is "dequeued" (step **904**) by reading the message information from the processing queue (which is stored in the message list structure). The command field (CMD) within the COM_INFO section of the message list is read. The message is parsed into specific components (step **906**), by reading the first two bytes of the command field, converting these bytes to a long integer form and storing the data base identifier in the Data_File field of the message list (step **908**). Next, the third byte of the command (CMD) field in the COM_INFO structure is read and stored in the Command field of the message list (step **910**). Then the actual data message is appended to the message list structure based on the message pointer (MSG_TO_HH) and the message pointer (MSG_TO_HH) and the message length

(MSG_LEN) are reset (step **912**). The communications server **12** sends the message to the appropriate command server **14** based upon the database and command code (step **912**).

[**0119**] Next, the previous message pointer (Previous_MSG_LST) is read from the current message list to determine the next message to be processed on the queue (step **914**) and control is returned to step **902**. In this manner, each message upon the processing queue **112** is parsed through and transmitted to the appropriate command server **14**. When no more commands are on the processing queue, control is moved to the create transmit queue module (step **916**) (**FIG. 15**).

[**0120**] **FIG. 17** illustrates the process by which the communication server **12** processes messages upon the transmit queue which are to be sent to the handheld interface **8**. First, the first message upon the transmit queue is tested (step **1000**) to determine whether data is contained therein (step **1002**). If data exists, the message is dequeued by taking the message off the transmit queue (step **1004**). Next, the command information from the message list is read and a long header constructed for the first packet to be transmitted to the handheld interface **8** for the message (steps **1008** and **1009**). Next, the data from the message is written to the packet and transmitted (step **1010** and **1012**). Thereafter, it is determined whether additional data remains to be transmitted to the handheld interface **8** (step **1014**). If yes, a short header is constructed (step **1015**) and additional data from the message is written to the packet containing the short header (step **1016**).

[**0121**] Once constructed, the packet containing the short header is transmitted (step **1018**) and processing returns to step **1012** at which it is determined if more data remains. This loop is repeated until the entire message has been transformed from the message list structure into data packets and transmitted to the handheld interface **8**. Once the entire message has been transmitted, control passes to the next module (step **1020**).

[**0122**] The communications server **12** tests the communication bus **6** and determines if messages have been sent from other communication servers. First, the communications bus is tested to see if a message exists (step **1100**). If a message exists, the message is read (step **1104**) and the command therefor is decoded (step **1106**). Thereafter, the command is tested to determine whether the message should be transmitted to a corresponding handheld interface **8** or whether the message should be transmitted to a command server connected to the communication server **12** (steps **1108** and **1110**). Thereafter, the message is placed on the transmit or processing queue depending upon the destination of the message (steps **1112** and **1114**). Thereafter, control is returned to the main program (step **1116**). This process is continuously repeated until the communication server **12** is turned off. Once turned off, the communications channels are closed and the system is turned off.

[**0123**] Command Server

[**0124**] The command server operates to update the corresponding databases based upon messages received from the communications server. The command server utilizes a conventional software package for managing these databases, such as Pro-tree (version 2.0). Other database managing systems may be used to access the data base, such as DBase, CodeBase, B-Trieve, Cisam and the like. Particular commands within the conventional management system are called depending upon the command code and database codes transmitted within the message list.

[**0125**] **FIG. 19** illustrates the process by which the command server **14** invokes the database management functions. First, the command server **14** receives the receives a message (step **900**), including the complete message list structure followed by the data message. Next, the command server **14** reads the data base file field (step **902**) and determines whether that data base code is valid for the present command server **14** (step **904**). If not, it returns an error message (step **906**). If so, control is transferred to the database routine corresponding to the command code (CMD) in the Command field of the message list (step **908**). Next, it is determined whether the command code is correct for the addressed database (step **910**). If not, it returns an error code (step **906**). If so, it accesses the message data within the message list and performs the appropriate operation upon the data base (step **912**). Thereafter, it constructs a return message using the data returned from the database into the structure of the message list (step **914**) and quits (step **916**).

[**0126**] To invoke the database managing functions, the command number is processed within a case statement, whereby each case within the case statement corresponds to a unique command number. Each case statement calls the appropriate routines. For instance, command number **7** may represent an add command, and thus, case "7" would direct the command server to read the data from the message and write this data to the next address within the database. Similarly, the command number within the message may represent a read or request operation, in response to which, the corresponding case would direct the command server to read the desired information from the database corresponding to the user ID transmitted within the message. The command server thereafter adds this data to the message and retransmits it to the communications server.

[**0127**] From the foregoing it will be seen that this invention is one well adapted to attain all ends and objects hereinabove set forth together with the other advantages which are obvious and which are inherent to the structure.

[**0128**] It will be understood that certain features and subcombinations are of utility and may be employed without reference to other features and subcombinations. This is contemplated by and is within the scope of the claims.

[**0129**] Since many possible embodiments may be made of the invention without departing from the scope thereof, it is to be understood that all matter herein set forth or shown in the accompanying drawings **1-19** is to be interpreted as illustrative, and not in a limiting sense.

[**0130**] The following appendix sets forth descriptions of the modules and functions used by the present system. Glossary

[**0131**] key—an area of the screen that has been registered with the opening system as an area where an event is expected. If an event does not occur within this area, an integer identifier will be returned by the operating system indicating that the event did occur.

[0132] event—the screen was touched, if it was touched in an area defined by a key, then return the identifier.

[0133] scrolling text window—a key where scrolling text will reside.

[0134] scroller—a key associated with the scrolling text window, the scroller has a bar in it to indicate where the text within the text window is in relationship to the rest of the text.

[0135] scrollbar—the tool used for entering vitals (darkened from the very bottom of the key to the value chosen by the user).

[0136] rolling key—a key with a digit in it, when the key is touched, that digit is incremented. If the digits value is 9 and it is incremented, it will contain the value 0 with no carry performed.

[0137] Module

[0138] scrollbar.c—contains all functions for the scroll bar functions to be used by other modules.

[0139] init scroll_bar—initializes all necessary variables and draws all of the detail.

[0140] get_scroll_bar_value—upon an event in the scroll bar key, this routine is called and it handles that event, then it returns the value and that the scroll_bar is pointing to (the value point pointed to by the user).

[0141] set_scroll_bar_value—the user can set the value any time.

[0142] functions to be used internally by this module

[0143] draw_scroll_bar—draws the inside of the scroll_bar.

[0144] Module

[0145] vital_input—contains all the functions used to perform the vital input

[0146] note—the Mode value indicates what is being input at the moment, if the user has chose systolic, then the systolic rolling keys are inverted and activated, and the scroll bar will have the systolic data in it. possible modes—systolic, diastolic, pulse, temperature, respiratory.

[0147] Write_Keys_Data—this routine redraws the rolling keys associated with a certain mode, (example, if the mode is pulse and the user somehow changes the value, this routine draws the 100s value in the leftmost key, the 10s value in the middle key, and the is value in the rightmost key).

[0148] ChangeMode—changes the mode of the screen, this involves (1) turning off the old mode (example—pulse); (2) turning on the rolling keys of the new mode (example—systolic) so now an event may occur—also invert the keys to that they are white on black; and (3) calling Init_scroll_bar to redraw the scroll bar with the new modes details.

[0149] EnterVitalsDraw—draw the detail on the entire screen

[0150] (1) write patients name

[0151] (2) write last date and time that the vitals were entered

[0152] (3) write the last vitals values

[0153] (4) turn off all rolling keys

[0154] (5) change the mode to systolic by calling changemode p0 inc_value—increment the values in the rolling keys, then call Write_Keys_data.

[0155] inc_temp—same as inc_value, but allow the 100's key to contain the values 0, 1, 2, 3, 4, 5, 6, 7, 8, 9, 10, 11.

[0156] Do_vital_input—THE MAIN ROUTINE

[0157] (1) calls EnterVitalDraw

[0158] (2) contains the case statement that handles events.

[0159] Module

[0160] graph.c—draws the graph on the screen.

[0161] make_graph—receives x, y values, x axis label, y axis label, the type of data that the x and y values are (time, short int, int, long int, float, etc.) and draws the graph, depending upon the type of data in x and y, it calls a simple routine that turns the x, y values into x, y plotting points on the screen.

[0162] Module

[0163] patinput.c—contains all of the functions used to pick a patient.

[0164] DoPatientInput—does the entire screens functionality within this one routine.

[0165] 1—init_scroller—passes in the patient list and the two keys (scroller key and scrolling text key).

[0166] 2—handles all events.

[0167] events in the case that the user picks A-Z, that letter is concatenated onto the search string which is initially empty, then a sequential search upon the text strings is performed to find the first text which is greater in alphabetic value than the search string, then that value is chosen via the function set_scroller_value.

[0168] in the event the user touches the scroller then get_scroller_value is called.

[0169] in the event the user touches the scrolling text key, then get_scroll_text_value is called.

[0170] Module

[0171] vital_1.c—the starting point of the program, contains all function calls.

[0172] note—Every single "screen" that is called from any other "screen" will be associated by a Calling Identifier (CallID).

[0173] DoMainMenu—two main case statements

[0174] case statement #1 handles the events of the main menu, if an event occurs in any of the keys of the main menu, then store the CallID in the variable called ReturnCode.

[0175] case statement #2 while ReturnCode is not equal to 0 loop the case statement. since the ReturnCode is not 0, call the appropriate function associated with the Calling Identifier stored in the variable, the function called will eventually return a code that will again be stored in the variable RetCode.

[0176] Module

[0177] scroller.c—contains all functions for the scrolling text windows, functions to be used by other modules

[0178] init_scroller—initializes all necessary variables and draws of all the detail.

[0179] get_scroller_value—upon an event in the scroller key, this routine is called and it handles that event, then it returns the value that the scroller is pointing to (in our program, this value is the index into an array of strings—points to the text that was picked).

[0180] set_scroller_value—the user can set the value any time.

[0181] get_scroll_text_value—upon an event in the scroll text window, this routine is called and it handles that event, then it returns the same value as does the get_scroller_value function.

[0182] functions to be used internally by this module

[0183] draw_scroller—draws the bar inside of the scroller, then calls draw_scroll_text.

[0184] draw_scroll_text—draws all of the text that appears in the scrolling text window.

[0185] invert_picked_text—inverts the text that is being pointed to by the user.

[0186] Major Functions

[0187] open_ir_used to initial the IR communication with the AndroDat Card and setup the communication channels with each device.

[0188] close_ir—used to close all communication channels with the hand held.

[0189] init_com_info—used to reset and clear all data contained for one specified com)info buffer. This routine is called initially to initialize each buffer and ready to receive data. After a message has been received and put on the process queue, this routine is used to clear the old data and ready the input buffer for the next command.

[0190] collect_messages—this routine will read through each input channel to see if a message exists. If one exists, then the message will be read into a temporary buffer and passed to the routine place_message for placement on the input buffer.

[0191] place_message—this routine will determine if the message being read in is the first or subsequent message. If the message is the first packet, then the routine parse_long_hdr is called. If the packet is the second or subsequent message, the routine parse_short_ dr is called.

[0192] parse_short hdr—this routine is used to parse the structure tmp_buffer, validate the command being sent along with the correct packet number, then place the data in the appropriate in_buffer message structure. This routine is called after the initial command packet is sent.

[0193] parse_long_hdr—this routine is used to parse the structure tmp buffer, validate the command being sent. This routine then initializes the in_buffer structure and finally places the data in the in_buffer messages structure. This routine is called when a handheld device sends its initial packet for requesting a command.

[0194] comm_server—this routine is the main routine which controls the logic flow of the entry communication server system.

[0195] process_in_buffer—this routine is used to search the in_buffer for completed messages to e placed on the process queue. This routine determines if a messages is finished if msg_total=-msg_len and msg_total>0. This routine calls ENQUEUE to physically put the message on the process queue.

[0196] process_cmd—this routine is used to take the next message off the command queue then send it to the correct server for processing. This routine calls the dequeue function to physically dequeue the item off the command queue.

[0197] process_transmit—this routine is used to take the next message off the transmit queue then send it to the correct server for processing. This routine calls the dequeue function to physically dequeue the item off the transmit queue.

[0198] packet_msg—this routine is used to physically send the message from the communication server to the handheld computer via the AndroDat Card. It is responsible for all packet of the data and verify of successful transmission.

[0199] enqueue—this routine takes completed messages and places them on the queue. A parameter is passed to which queue to place the message along with the data to queue.

[0200] dequeue—this routine will take messages off the queue and place in a temporary buffer to be processed by the communication server. A parameter is passed to which queue to process along with the temporary space to put message.

[0201] nulqueue—this routine is used to initialize a queue and prepare it to start receiving data. Call to this routine will destroy any data existing in the queue.

[0202] com_info—this structure is used to store the incoming message from the handheld

[0203] in buffer—this is an array of teh structure com info. This structure is used to hold the individual messages being received from the handheld computers.

[0204] message_list—this structure is used to serve as the queuing functions for the command processing and data transmission.

[0205] long_hdr—this is the structure of the header for initial communication to the server.

[0206] short_hdr—this is the structure for second and subsequent communications of the second command.

1. A communication protocol comprising:

multiple communications messages transmitted between a first computer and a second computer, each message comprising a plurality of information packets, each of which being equal in length, wherein a first information packet in each message is constructed with a first format including a long header and a data segment, and wherein all information packets subsequent to said first information packet in each message are constructed with a second format including a short header and a data segment, the data segments from said plurality of information packets within each message forming a single data set related to a single matter.

2. The communications protocol of claim 2, wherein the long header includes a command field identifying a process to be performed upon the corresponding data segment, a user ID for identifying a user logged into the first computer and a message total field identifying a total length of the single data set corresponding to a current message within the present information packet and all subsequent information packets associated with said current message.

3. The communications protocol of claim 2, wherein the short header includes a command field for identifying a process to be performed upon the corresponding data segment, and a positioning packet identifying a position of a corresponding information packet within a current message.

6. The communications protocol of claim 2, wherein the data segments within information packets having the second format are longer than the data segments within information packets having the first format.

7. The communications protocol of claim 2, further comprising:

means for reading a current data set from work space memory in a handheld user interface;

means for determining a length of a message corresponding to said current data set and for determining a user ID of the user logged into said handheld user interface;

means for constructing said first information packet within a transmit buffer of the handheld user interface, said first information packet including said long head and a data segment derived from at least a portion of said current data set.

8. The communications protocol of claim 6, further comprising:

means, within the handheld user interface for transmitting a current information packet within the transmit buffer and clearing said transmit buffer; and

means for constructing at least one information packet subsequent to said first information packet including said short header along with a next data segment derived from said current data set, when said current data set is longer than said data segment of said first information packet.

9. The communications protocol of claim 2, further comprising:

a receiver/transmitter, within a communications/command server, for receiving and transmitting said information packets from and to at least one handheld user interface;

a temporary buffer for storing each information packet from each communication channel, each communication channel corresponding to a unique handheld user interface; and

an input buffer for storing received information packets while a CPU converts said received information packets from said first and second formats to a message list format.

10. The communications protocol of claim 8, wherein said message list format includes command information related to messages received from said at least one handheld user interface, said command information including a device number uniquely identifying the handheld user interface transmitting a given message, a command to be processed in accordance with the given message, a packet number identifying a position of the current information packet within the given message, a destination user ID identifying a user to which said given message is addressed, a message total length identifying a total length of said single data set for the given message, a message length identifying a portion of said given message currently received, and a message pointer into a message buffer to a location of said given message.

* * * * *