(12) STANDARD PATENT (11) Application No. **AU 2007309000 B2**
(19) AUSTRALIAN PATENT OFFICE

(54) Title
Biopsy collection device

(51) International Patent Classification(s)
A61B 10/04 (2006.01)

(21) Application No: **2007309000** (22) Date of Filing: **2007.10.23**

(87) WIPO No: **WO08/051951**

(30) Priority Data

(31) Number	(32) Date	(33) Country
60/854,537	**2006.10.26**	**US**

(43) Publication Date: **2008.05.02**
(44) Accepted Journal Date: **2013.02.28**

(71) Applicant(s)
Cook Medical Technologies LLC

(72) Inventor(s)
Karpiel, John A.

(74) Agent / Attorney
Phillips Ormonde Fitzpatrick, 367 Collins Street, Melbourne, VIC, 3000

(56) Related Art
WO 2006/064868
US 2005/0222519

(12) INTERNATIONAL APPLICATION PUBLISHED UNDER THE PATENT COOPERATION TREATY (PCT)

(19) World Intellectual Property Organization
International Bureau

(43) International Publication Date
2 May 2008 (02.05.2008)

PCT

(10) International Publication Number
WO 2008/051951 A1

(51) International Patent Classification:
A61B 10/04 (2006.01)

(21) International Application Number:
PCT/US2007/082188

(22) International Filing Date: 23 October 2007 (23.10.2007)

(25) Filing Language: English

(26) Publication Language: English

(30) Priority Data:
60/854,537 26 October 2006 (26.10.2006) US

(71) Applicant *(for all designated States except US)*: **WILSON-COOK MEDICAL INC.** [US/US]; P.O. Box 27115-4191, 4900 Bethania Station Road, Winston-salem, NC 27105-4191 (US).

(72) Inventor; and

(75) Inventor/Applicant *(for US only)*: **KARPIEL, John, A.** [US/US]; 4880 Fleetwood Circle, Winston-salem, NC 27106 (US).

(74) Agent: **DARE, Heidi, A.**; Brinks Hofer Gilson & Lione, P.O. Box 10087, Chicago, IL 60610 (US).

(81) Designated States *(unless otherwise indicated, for every kind of national protection available)*: AE, AG, AL, AM, AT, AU, AZ, BA, BB, BG, BH, BR, BW, BY, BZ, CA, CH, CN, CO, CR, CU, CZ, DE, DK, DM, DO, DZ, EC, EE, EG, ES, FI, GB, GD, GE, GH, GM, GT, HN, HR, HU, ID, IL, IN, IS, JP, KE, KG, KM, KN, KP, KR, KZ, LA, LC, LK, LR, LS, LT, LU, LY, MA, MD, ME, MG, MK, MN, MW, MX, MY, MZ, NA, NG, NI, NO, NZ, OM, PG, PH, PL, PT, RO, RS, RU, SC, SD, SE, SG, SK, SL, SM, SV, SY, TJ, TM, TN, TR, TT, TZ, UA, UG, US, UZ, VC, VN, ZA, ZM, ZW.

(84) Designated States *(unless otherwise indicated, for every kind of regional protection available)*: ARIPO (BW, GH, GM, KE, LS, MW, MZ, NA, SD, SL, SZ, TZ, UG, ZM, ZW), Eurasian (AM, AZ, BY, KG, KZ, MD, RU, TJ, TM), European (AT, BE, BG, CH, CY, CZ, DE, DK, EE, ES, FI, FR, GB, GR, HU, IE, IS, IT, LT, LU, LV, MC, MT, NL, PL, PT, RO, SE, SI, SK, TR), OAPI (BF, BJ, CF, CG, CI, CM, GA, GN, GQ, GW, ML, MR, NE, SN, TD, TG).

[Continued on next page]

(54) Title: BIOPSY COLLECTION DEVICE

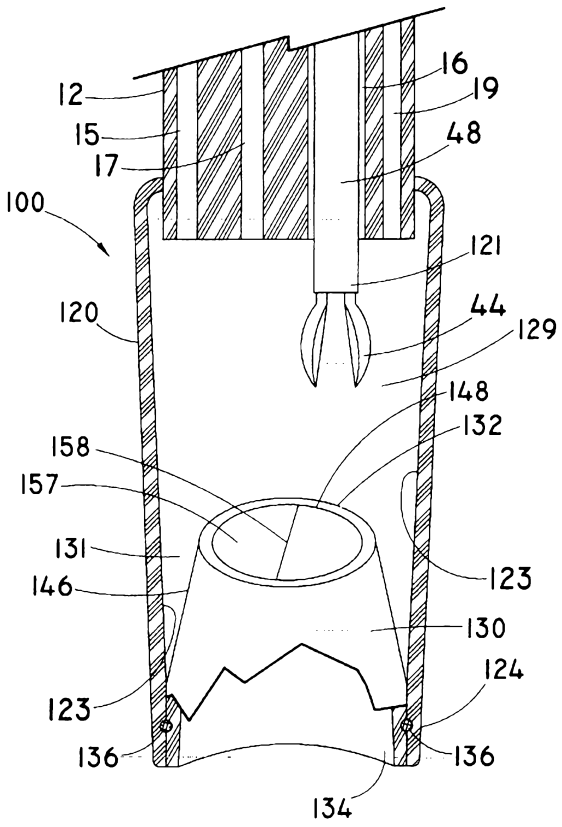

(57) Abstract: A device for removing tissue from a patient during a biopsy procedure utilizing a biopsy collection device is provided. The biopsy collection device (100) includes a body portion (120) configured for attachment to an endoscope (10) and a receptacle portion (130) configured to retain a portion of tissue removed from a target site during the biopsy procedure. The biopsy collection device further includes a passageway (129) configured to receive a biopsy sampling device, such as a pair of forceps, passing through the endoscope to the target site.

WO 2008/051951 A1

Published:
— *with international search report*
— *before the expiration of the time limit for amending the claims and to be republished in the event of receipt of amendments*

2007309000 07 Feb 2013

TECHNICAL FIELD

The invention generally relates to a medical device for removal and collection of portions of the mucuosa and/or submucosa tissue during medical procedures.

BACKGROUND

Diagnostic and therapeutic gastrointestinal endoscopy procedures are commonly used to gain access to the digestive tract for the purpose of removing tissue during biopsy procedures. Common endoscopy procedures include incision and ablation through various known mechanisms.

Techniques for obtaining tissues during biopsy procedures and/or other medical procedures involving tissue removal can be difficult. For example, regular endoscopic surveillance procedures involving multiple biopsies are advocated to detect development of dysplasia as a precancerous lesion. These procedures, which include endoscopic mucosal resection (EMR), involve the removal of a fragment (i.e., resection) of the digestive wall including the mucosal membrane. This procedure typically removes a part or even all of the submucosa. Endoscopic mucosectomy is a curative endoscopic procedure which is intended for sessile benign tumors and intramucosal cancers. The procedure makes it possible to determine precisely the nature of subsequent treatment required.

The incision devices currently utilized in biopsy procedures often make tissue removal difficult. These problems are compounded by the thick gastrointestinal wall that the incisions are performed within. Considerable time and effort is therefore required by the physician to incise and remove the desired tissue. The inability to quickly remove tissue increases patient trauma. Moreover, current incision devices cannot remove unfragmented portions of tissue. Assessment of fragmented tissue becomes increasingly difficult during sampling as compared to assessment of unfragmented tissue. Furthermore, fragmented resection of early cancers may lead to a higher rate of local tumor recurrence. Assessment of fragmented tissue becomes increasingly difficult during sampling as compared to assessment of unfragmented tissue. Furthermore, fragmented resection of early cancers may lead to a higher rate of local tumor recurrence.

Some biopsy procedures are cumbersome and time consuming due to problems incising a tissue sample from a target site because often a separate procedure needs to be

2007309000 07 Feb 2013

performed to incise and collect a biopsy of the target site. For example, a biopsy of the target site is typically obtained by passing a different instrument to the target site and then cutting away and removing the tissue sample. The introduction of separate devices to the patient for treating the tissue increases the procedure time and causes patient discomfort.

In view of the drawbacks of current medical devices, there is a need for a medical device that can more efficiently remove tissue and debris during biopsy procedures without the need of multiple exchanges of medical devices while significantly reducing the duration of the biopsy procedure.

Reference is herein directed to EP-A-1 834 599, which is regarded as the closest prior art, in which there is provided a cap attachment with excising function attached to the tip of an endoscope, the cap attachment comprising a cylindrically shaped body part and a plate-shaped excising part projecting from the tip of the body part.

Document EP-A-1870015 falls within the terms of Article 54(3) EPC and is silent to the mention of a receptacle portion including a wall extending proximally from the distal end portion into the substantially hollow interior and an opening through the receptacle portion and defined by the wall.

SUMMARY

Accordingly, a biopsy collection device is provided that resolves or improves upon one or more of the above-described drawbacks.

In one aspect of the present invention, a biopsy collection device is provided. The biopsy collection device includes a body portion having a proximal end portion and a distal end portion, the proximal end portion is configured for attachment to an endoscope. The biopsy collection device further includes a passageway extending through the body portion where the passageway is configured to receive a biopsy sampling device extending from the endoscope and passing through the passageway to a target site. The biopsy collection device includes a receptacle portion operably connected to the passageway and configured to retain a sample removed from the target site during a biopsy procedure.

In another aspect of the present invention, a biopsy collection device is provided. The biopsy collection device includes a body portion having a proximal end portion, a distal end portion and a substantially hollow interior. The proximal end portion is configured for attachment to an endoscope. The biopsy collection device further includes a receptacle portion defined in the distal end portion and configured for retaining a sample. The receptacle

2007309000 07 Feb 2013

portion includes a wall extending proximally from the distal end portion into the substantially hollow interior and an opening through the receptacle portion and defined by the wall. The biopsy collection device also includes a passageway extending between the proximal end portion and the opening, wherein the passageway is configured for receiving a biopsy sampling device passing from the proximal end portion through the passageway to a target site to obtain the sample.

BRIEF DESCRIPTION OF THE DRAWINGS

Embodiments will now be described by way of example with reference to the accompanying drawings, in which:

FIG. 1 is a perspective view of a biopsy collection device attached to an endoscope in accordance with an embodiment of the present invention;

FIG. 2 is a perspective view of the biopsy collection device of FIG. 1;

FIG. 3 is a perspective view of the body portion and the receptacle portion of the biopsy collection device of FIG. 2 in a partially connected configuration;

FIG. 4 is a perspective view of the body portion and the receptacle portion of the biopsy collection device showing a unitary configuration;

FIG. 5 is a cross-sectional view of the body portion of the biopsy collection device of FIG. 2;

[0018] **FIG. 6** is a top sectional view of the receptacle portion of the biopsy collection device of FIG. 2;

[0019] **FIG. 7** is a partial cross-sectional view of the body portion and the receptacle portion of the biopsy collection device of FIG. 2;

[0020] **FIG. 8** is a partial cross-sectional view of the biopsy collection device attached to the endoscope of FIG. 1;

[0021] **FIG. 9** is a partial cross-sectional view of the biopsy collection device attached to the endoscope of FIG. 1 wherein a pair of forceps is inserted within the biopsy channel of the endoscope to remove tissue from target site;

[0022] **FIG. 10** is a cross-sectional view of a portion of the endoscope of FIG. 9;

[0023] **FIG. 11** is partial cross-sectional view of the biopsy collection device of FIG. 9, wherein the pair of forceps is inserted into the passageway of the body portion of the biopsy collection device;

[0024] **FIG. 12** is partial cross-sectional view of a one-piece biopsy collection device having a secondary receptacle portion, wherein the pair of forceps is inserted into the passageway of the body portion of the biopsy collection device;

[0025] **FIG. 13** is a partial cross-sectional view of a one-piece biopsy collection device showing the pair of forceps obtaining a biopsy sample;

[0026] **FIG. 14** is a partial cross-sectional view of a biopsy collection device having a first and second receptacle portion;

[0027] **FIG. 15** is a cross-sectional view through the line B--B showing the passageway, the first and second receptacle portions;

[0028] **FIG. 16** is a cross-sectional view through the biopsy collection device showing a central passageway and first and second receptacle portions;

[0029] **FIG. 17** is a cross-sectional view through the biopsy collection device showing an off-set passageway; and

[0030] **FIG. 18** is a partial cross-sectional view of a biopsy collection device showing a needle device.

DETAILED DESCRIPTION OF THE PREFERRED EMBODIMENTS

[0031] The embodiments are described with reference to the drawings in which like elements are referred to by like numerals. The relationship and functioning of the various elements of the embodiments are better understood by the following detailed description. However, the embodiments as described below are by way of example only, and the invention is not limited to the embodiments illustrated in the drawings. It should also be understood that the drawings are not to scale and in certain instances details have been omitted, which are not necessary for an understanding of the embodiments, such as conventional details of fabrication and assembly.

[0032] **FIGS. 2-7** illustrate an embodiment of the biopsy collection device **100** prior to attachment to the endoscope **10**. The biopsy collection device **100** comprises a body portion **120** and a receptacle portion **130,** wherein the receptacle portion **130** is configured to receive and store tissue and debris removed during a biopsy procedure.

[0033] **FIG. 1** illustrates a biopsy collection device **100** for the removal and storage of tissue upon performing a biopsy in accordance with the present invention. The biopsy collection device **100** is shown attached to a distal end **13** of an endoscope **10**. The endoscope **10** may be a conventional endoscope with an operating control portion **11** and a flexible insertion tube **12**. The endoscope **10** further comprises a biopsy port **18** extending through an operating biopsy channel **16** of the present invention. The biopsy collection device **100** is compatible for use with the endoscope **10** during biopsy procedures, and can also be implemented in other medical procedures. For example, the biopsy collection device **100** may be implemented in procedures such as endoscopy, gastroscopy, sigmoidoscopy and colonoscopy, esophago gastro duodenoscopy (EGD), endoscopic retrograde cholagiopancreatography (ERCP), endoscopic mucosal resection (EMR), and bronchoscopy.

[0034] As shown in **FIG. 2**, the biopsy collection device **100** may include a body portion **120** having a proximal end **122** and a distal end **124** and a receptacle portion **130** at the distal end **124**. The device **100** further comprises a passageway **129** extending through the body portion **120** for receiving medical devices when

the biopsy collection device **100** is coupled to the endoscope **10**. The passageway **129** is configured to receive medical devices that are passed through an operating biopsy channel **16** in the endoscope **10** and through the body portion **120** to remove tissue from a target site of a patient. The passageway **129** forms a generally hollow interior of the body portion **120**. As shown in **FIG. 2**, the receptacle portion **130** of the biopsy collection device **100** includes a proximal end **132** and a distal end **134,** wherein the distal end **134** includes a lumen **131** to receive and store tissue or debris during the biopsy procedure. (See **FIG. 13**).

[0035] As shown in more detail in **FIGS. 11-14**, the biopsy collection device **100** includes the receptacle **130** at the distal end **124** of the body portion **120**. The receptacle **130** includes at least one lumen **131** formed in the receptacle **130** between a wall **123** of the body portion **120** and a wall **146** of the receptacle portion **130**. In some embodiments, the wall **146** is upstanding from the distal end **134** of the receptacle portion **130** and directed toward the proximal end **132**. The wall **146** may further form a circumferential opening **148** defined in the receptacle portion and operably connected to the passageway **129**. The opening **148** allows the medical device to extend to the exterior of the biopsy collection device **100** to the biopsy site. The opening **148** may be centrally positioned within the biopsy collection device **100** as shown in **FIG. 16** or off-set as shown in **FIGS. 15** and **17**. The opening **148** may have a reduced diameter that permits the passage of a medical device therethrough, but inhibits passage of the sample through the opening **148** once the sample has been collected in the receptacle portion **130**. In some embodiments, at least a portion of the wall **146** may be angled inward and away from the wall **123** from the distal end **134** to the proximal end **132**. The angled wall **146** provides a larger lumen for ease of sample placement therein.

[0036] As shown in **FIGS. 14** and **15**, the wall **146** may include a flange **150** extending partially over the lumen **131** to help retain the sample in the lumen **131**. The flange **150** may be provided as a flexible rim extending over the lumen **131** around the opening **148** to retain the sample in the lumen **131**. The flange **150** may be flexible enough to allow the sampling device to deposit the sample in the lumen **131**, but rigid enough so that the sample is retaining in the lumen **131** for the remainder of the procedure. In some embodiments, the wall **146** may be

flexible and/or tapered inward toward the opening **148** so that the forceps **44** may pass through the opening **148** but the flexible walls **146** inhibit the passage of the samples stored in the lumens **131** out of the biopsy collection device **100**. As shown in **FIG. 11**, some embodiments may include a septum **157** covering the opening **148** to inhibit the passage of the samples back out of the opening **148**. The septum **157** may include a slit **158** for passage of the medical device therethrough. The forceps **44** may also be used to compress the tissue to draw the sample into the receptacle **130** through the opening **148**.

[0037] The lumen **131** may be sectioned into a plurality of lumens **131** by one or more wall partitions **152** upstanding from the distal end **134** of the receptacle portion **130**. In some embodiments, the distal end of the receptacle portion **130** may include a viewing portion **154** that is optically configured for providing a viewing window for an optical device as shown in **FIG. 15**. In some embodiments, a portion of the biopsy collection device **100** is substantially transparent to facilitate viewing of the target area.

[0038] The biopsy collection device **100** may comprise a unitary structure (see **FIG. 4**) or multiple components (see **FIGS. 2-3**) being slidably connected or other suitable design variations and fall within the scope of the invention.

[0039] The body portion **120** of the biopsy collection device **100** also includes an inner wall **123**. The inner wall **123** may include grooves **125** located along the surface of the inner wall **123**. As shown in **FIG. 5-7**, the grooves **125** provide an opening to receive protuberances **136** of the receptacle portion **130** when the biopsy collection device **100** is provided in a multi-component configuration. The grooves allow the receptacle portion **130** to be attached and detached from the body portion **120** of the device **10** to remove tissue and debris.

[0040] In the embodiment providing multiple portions, the receptacle portion **130** comprises two protuberances **136** for slidably connecting the receptacle portion **130** to the body portion **120**. The receptacle portion **130** is configured to slidably move relative to the inner wall **123** of the body portion **120** and align the protuberances **136** with the grooves **125** of the inner wall **129**. The protuberances **136** allow the body portion **120** to be easily inserted and removed from the passageway **129** of the body portion **120** by simply pushing or pulling the body

portion **120** from the passageway **129** thereby causing the protuberances **136** to disengage from the grooves **125**. Alternatively, the receptacle portion **130** may comprise a unitary structure to receive and store tissue or debris during the biopsy procedure **(FIG. 4)**. In this embodiment, the tissue or debris may be stored within the receptacle **130** until removal of the device **100** from the endoscope.

[0041] Referring to **FIG. 6**, the protuberances **136** may be oval and located along the surface of the receptacle portion **130**. However, in an alternate embodiment, the protuberances **136** can include a variety of shapes and can be positioned in a variety of locations suitable for securely connecting the receptacle portion **130** with the body portion **120** of the biopsy collection device **100**. In this embodiment, after withdrawal of the medical device from the passageway **129**, the receptacle portion **120** can be removed and the tissue or debris is retrieved.

[0042] In another embodiment of the present invention, the biopsy collection device **100** can also comprise one or more secondary receptacle portions **138** disposed within the passageway **129** of the biopsy collection device **100** (see **FIG. 12**). Secondary receptacles may also be formed in the distal end **134** by dividing the receptacle portion **130** into additional receptacles as described above. See for example, **FIGS. 14-18.** As shown in **FIG. 12,** the secondary receptacle portion **138** provides the lumen **139** to receive multiple samples of tissue or debris during the biopsy procedure. Samples of tissue and debris may be taken from a first biopsy site and collected in the lumen **131** of the receptacle portion **130** of the biopsy collection device **100.** The secondary receptacle portion **138** further allows a second sample of tissue to be collected, for example, at a second biopsy site. Additional receptacle portions **138** may also be provided in the biopsy collection device **100** when multiple biopsy samples are to be collected from multiple biopsy sites, i.e. one receptacle portion may be provided for each biopsy site. Similarly, the lumen **131** may be subdivided using wall partitions **152.** The receptacles **130**, **138** and lumens **131**, **139**, therein may be marked to be visible to the operator of the biopsy device to be able to distinguish the different biopsy sample locations. For example, a first lumen **131** may be marked with a unique indicia that is viewable by the operator and subsequent lumens may be marked with differing unique indicia. Similarly, a first lumen **131** may be marked with a unique indicia

and the operator may place samples in a clockwise or counterclockwise direction around the receptacle 130 so that the operator would know which sample was taken first, second, etc. Additionally, there is no need to repeatedly withdraw the biopsy forceps or other medical devices during the collection of multiple tissue or debris samples. Thus, multiple samples from various target sites can be easily stored and retrieved. After completion of the biopsy procedure, the biopsy collection device **100** is disengaged from the attached endoscope **10** and the multiple samples of tissue or debris are collected.

[0043] Referring to **FIGS. 2-4**, the biopsy collection device **100** may include a tapered distal end **124** provided with an atraumatic tip which includes both a conical taper **127** and a bevel **135** the distal end. The atraumatic tip of the biopsy collection device **100** reduces the potential damage to the patient during delivery of the device **100**. As such, the bevel edges of the biopsy collection device **100** present few, if any, sharp edges. The conical taper **127** also allows the biopsy collection device **100** to be easily maneuvered as it is engaged and disengaged from the endoscope **10** utilizing a snap-fit connection.

[0044] In an alternate embodiment, the body portion **120** can also comprise a side outlet port (not shown) located along the outer surface of the biopsy collection device **100**. The outlet port provides an exit for any medical devices to pass through the passageway of the biopsy collection device during a biopsy procedure.

[0045] **FIG. 8** is a partial cross-sectional view of the endoscope **10** and attached biopsy collection device **100**. The endoscope **10** includes the operating biopsy channel **16** which extends from the biopsy port **18** to the insertion tube **12**. The insertion tube **12** leads to the attached biopsy collection device **100**. As shown in **FIG. 10**, the insertion tube **12** includes a plurality of channels through which medical devices, such as forceps or a cutting device, may be disposed. In addition to the biopsy channel **16**, the insertion tube provides a suction channel **15**, an air/water channel **17** and a viewing channel **19**. The present invention is not limited to the above mentioned channels and other embodiments may include varying combination of channels to accommodate other medical devices.

[0046] As shown in **FIGS. 8** and **9**, the operating control portion **11** of the endoscope **10** is in mechanical and fluid communication with the insertion tube **12**. The control portion **11** is configured to control the insertion tube **12** and endoscopic parts disposed therein. As shown, the control portion **11** includes first and second control knobs **24**, **26**. The control knobs **24**, **26** are configured to be in mechanical communication with the insertion tube **12**. The control knobs **24**, **26** allow the physician to control and guide, by known means, the insertion tube **12** through the vessels and cavities of the patient. The control portion **11** may further include a plurality of ports, such as a suction port **27**, an air/water port **28** and a camera port **29.** Each of the ports of the endoscope **10** is in communication to one of the channels of the insertion tube **12**. For example, the suction port **27**, when activated, allows a vacuum from a suction source through the suction channel **15** for suctioning unwanted plaque and debris from the patient. Likewise, the air/water port **28**, when activated, allows air and water through the air/water channel **17** for flushing removing tissue and/or debris from the patient. Also, the camera port **29**, when activated, allows a visual image of the target site through the viewing channel **19** for positioning and removing of tissue and/or debris from the patient. Additionally, the endoscope **10** includes a biopsy control knob **20** to control and guide the medical device inserted through the biopsy channel **16.**

[0047] Referring to **FIG. 9**, the exemplary pair of forceps **44** is extended along the operating biopsy channel **16** to the target site after a portion of tissue has been incised with a cutting device (not shown). The forceps **44** are inserted and extended into the biopsy channel **16** through a lumen of a catheter **48** to the target site for grasping the incised tissue and delivering the tissue to the biopsy collection device **100** for removal. The catheter **48** is a flexible tubular member formed from any semi-rigid polymer. For example, the catheter **48** can be formed from polyurethane, polyethylene, tetrafluoroethylene, polytetrafluoroethylene, perfluoalkoxl, fluorinated ethylene propylene, or the like. In a typical application, the catheter **48** may have a length of about 220 centimeters in order to sufficiently extend through the operating biopsy channel **16** of the endoscope **10**. Catheter **48** may also have an outer diameter from about 6 to 7 French in order to fit within the operating biopsy channel **16**. The catheter **48** may also have a hydrophilic coating

overlying its outer surface. The hydrophilic coating, when applied to the outer surface of the catheter **48**, imparts suppleness and kink resistance to the catheter **48**. Hydrophilic coating also provides a highly lubricated surface to facilitate movement through the operating biopsy channel **16** of the endoscope **10**.

[0048] Still referring to **FIG. 9,** the forceps **44** can include a pair of opposed finger rings **46** which enable a user to grasp the same and advance the forceps **44** towards the distal end **13** of the endoscope **10** to remove tissue from the target site.

[0049] **FIG. 11** illustrates the biopsy collection device **100** of **FIG. 8**, wherein a medical device, such as a pair of forceps **44**, is inserted through the biopsy channel **16** of the endoscope **10.** The forceps **44** are utilized during the biopsy procedure to remove tissue after the tissue as been cut from a target site within a body cavity. The forceps **44** can be slidably disposed through the biopsy channel **16** into the body passage **129** of the biopsy collection device **100**.

[0050] As illustrated in **FIGS. 10-11**, the forceps **44** may be incrementally moved along the operating biopsy channel **16** to enable controlled extension of the forceps **44** into the passageway **129** of the biopsy collection device **100** located at the distal end **13** of the endoscope **10**. The forceps **44** also facilitate the controlled positioning of tissue during the removal of tissue from the target site and delivery to the biopsy collection device **100**. Although **FIG. 9** shows forceps **44** as the apparatus for removing tissue from the target site, other devices will become apparent to one of ordinary skill in the art and are intended to be within the scope of the embodiment.

[0051] In an alternate embodiment, a hypodermic needle can also be movably disposed within a channel of the endoscope **10** to assist in the removal of the tissue at the target site. For example, referring to **FIG. 18**, a needle **152** may be inserted into a port of the endoscope **10** and delivered to the tissue, for example through the catheter **48**. The needle **152** may be used to inject any type of physiological saline solution that is known in the art into tissue. This causes the tissue at the target site to elevate from the underlying normal tissue. Elevation of the tissue at the target site facilitates removal of the cancerous tissue or other types of abnormal tissue during a biopsy procedure. The ability to remove the abnormal tissue without cutting into it enables a more accurate assessment of the tissue than would

otherwise be possible if sampling a fragmented tissue sample. Furthermore, fragmented resection of early cancers may lead to a higher rate of local tumor recurrence. The needle **152** may also be used for obtaining tissue sample directly. Although **FIG. 9** illustrates forceps **44** and catheter **48** disposed within the biopsy channel **16** of the endoscope **10**, the endoscope **10** may contain multiple ports and/or channels adapted for separately receiving other devices, such as needles or other suitable devices, utilized during the biopsy procedure. The multiple channels can be used in connection with the secondary receptacle portion **136** to secure multiple samples of tissue or debris within the biopsy collection device **100** (see **FIG. 12**) during the biopsy procedure.

[0052] A method of using the biopsy collection device **100** will now be described with reference to **FIGS. 8-13**. In particular, and by way of example, **FIGS. 8-13** illustrate a method for performing a biopsy procedure utilizing the biopsy collection device **100** to remove tissue from the target site. The method includes the step of attaching the biopsy collection device **100** to the endoscope **10** and delivering the device **100** to the target site of the patient.

[0053] The method also includes a cutting device (not shown) inserted through the operating biopsy channel **16** of the endoscope **10** to incise tissue from the target site prior to removal. For example, a typical needle knife or other suitable device may be loaded into an accessory channel of the endoscope **10** to facilitate the cutting of the tissue from the target site. Such methods for incising tissue at the target site are well known to those of ordinary skill in the art. Alternatively, in other embodiments a cutting device may be omitted from the method as tissue from the target site may not be intended to be cut, as is the case of removing debris or other material from the target site.

[0054] Referring to **FIG. 9**, the method also includes the step of advancing forceps **44** through the operating biopsy channel **16** of the endoscope **10**. The forceps **44** are maneuvered through the channel **16** into a patient down through the esophagus and duodenum, towards the target site within the gastrointestinal lumen. During advancement of the forceps **44** to the target site, the distal end of the forceps **44** is extended within the lumen of the catheter **48** to grasp the incised tissue for delivery to the biopsy collection device **100**, as shown in **FIG. 13**.

[0055] **FIG. 11** is a partial cross-sectional view of the biopsy collection device **100** in close proximity to the tissue at the target site to be removed from the target site. After selectively positioning the biopsy collection device **100** in proximity to the target site, the method can further include the step of removing tissue or debris from the target site as shown in **FIG. 13** using the medical device to retain the tissue sample. The medical device is retracted into the biopsy collection device **100** and the tissue or debris may be placed into the receptacle portion **130** of the biopsy collection device **100.** Upon removal of the device **100** from the attached endoscope **10**, the tissue or debris is completely removed from the device. Alternatively, a flushing liquid, such as a saline solution, can be introduced to flush and remove the tissue or debris from the from the biopsy collection device **100**.

[0056] In another embodiment of the present invention, the method of removing tissue with the biopsy collection device **100** may also include the step of formatting a protrusion of the target site, after selectively positioning the biopsy collection device **100** in close proximity to the target site. The protrusion is created by injecting physiological saline solution through a needle **152**, which may be disposed within the lumen of the catheter **48** as shown in **FIG. 18**. The needle **152** may be inserted through the port **18**, shown in **FIG. 9**. The needle **152** may be disposed in the same lumen as the forceps **44** and extended beyond the distal end of the catheter **48** until it contacts target site. The physiological saline solution lifts the target site from the surrounding submucosa tissue, thus enabling subsequent incision of the elevated target site without inadvertently injuring the surrounding submucosa tissue. A sufficient amount of saline solution, as is known in the art, is injected to elevate the target site and separate it from the underlying submucosa tissue. After injection of the physiological saline is completed, the needle **152** is retracted within the lumen. The needle may also be used for obtaining a biopsy and is not limited to a particular channel and may be inserted through other channels of the endoscope **10**.

[0057] After the tissue at the target site has been sufficiently elevated, the process of creating the incision allows the tissue to be cut and removed. In particular, the distal end of the catheter **48** is advanced into the target site with the

forceps **44** remaining retracted within the lumen of the catheter **48** until delivery to the target site to remove the incised tissue and insert the tissue into the biopsy collection device **100**.

[0058] After the distal end of the catheter **48** is contained within the target site, the forceps **44** may be advanced distally past the distal end of the catheter **48** and into the tissue of target site. As the forceps **44** extend distally and into the target site, the tissue is grasped and removed from the biopsy site. The forceps 44 are retracted into the biopsy collection device **100** and the tissue sample is securely delivered to the lumen **131** of the receptacle **130** of the biopsy collection device **100**. As described above, multiple tissue samples may be biopsied and stored in the receptacles **130, 138** of the biopsy collection device **100** by repeating the sampling method and delivering the sample to the appropriate receptacle.

[0059] After the tissue from the target site has been delivered to the biopsy collection device **100**, the handle assembly **46** may be pulled to withdraw the forceps **44** through the endoscope **10**. Subsequently, the endoscope **10** and attached biopsy collection device **100** can be removed and the tissue can be retrieved from the biopsy collection device **100**.

[0060] The above figures and disclosure are intended to be illustrative and not exhaustive. This description will suggest many variations and alternatives to one of ordinary skill in the art. All such variations and alternatives are intended to be encompassed within the scope of the attached claims. Those familiar with the art may recognize other equivalents to the specific embodiments described herein which equivalents are also intended to be encompassed by the attached claims.

2007309000 07 Feb 2013

The claims defining the invention are as follows:

1. A biopsy collection device (100) comprising:

a body portion (120) having a proximal end portion (122), a distal end portion (124) and a substantially hollow interior, the proximal end portion (122) configured for attachment to an endoscope (10); characterised by

a receptacle portion (130) at the distal end portion (124), the receptacle portion (130), including a wall (146) extending proximally from the distal end portion (124) into the substantially hollow interior and an opening (148) through the receptacle portion (130) and defined by the wall (146), and configured to retain a sample removed from the target site during a biopsy procedure, and

a passageway (129) extending through the proximal end portion (122) and the opening (148), the passageway (129) configured to receive a biopsy sampling device extending from the endoscope (10) and passing through the passageway (129), to a target site.

2. The biopsy collection device of claim 1, wherein, the opening is configured to inhibit the passage of the sample out of the receptacle portion and configured to allow passage of the biopsy sampling device therethrough.

3. The biopsy collection device of claim 1, wherein the wall of the receptacle portion comprises a tapered wall.

4. The biopsy collection device of claim 3, wherein the wall includes a flange extending from the wall and partially covering the receptacle portion.

5. The biopsy collection device of claim 2, wherein the receptacle portion further includes a septum covering the opening, the septum configured to inhibit the passage of the sample out of the receptacle portion and configured to allow passage of the biopsy sampling device therethrough.

6. The biopsy collective device of claim 1, wherein at least a portion of the biopsy collection device is substantially transparent to permit viewing therethrough of the target site.

7. The biopsy collection device of claim 1, wherein the receptacle portion comprises a plurality of lumens for retaining samples therein.

8. The biopsy collection device of claim 7 wherein at least one of the plurality of lumens includes a unique indicia for allowing identification of the sample retained therein.

9 The biopsy collection of claim 1, wherein the receptacle portion is releasably connected to the body portion.

2007309000 07 Feb 2013

10. The biopsy collection device of claim 1, wherein the body portion comprises a secondary receptacle portion disposed within the passageway of the biopsy collection device configured for retaining another tissue sample collected during the biopsy procedure.

11. The biopsy collection device of claim 1, wherein the distal end portion of the body comprises an atraumatic tip.

12. The biopsy collection device of claim 1, further comprising an endoscope wherein the proximal end portion is attached to the endoscope.

13. The biopsy collection device of claim 12, further comprising a biopsy sampling device extending from the endoscope.

14. The biopsy collection device of claim 13, wherein the biopsy sampling device is a pair of forceps.

15. The biopsy collection device of claim 13, wherein the biopsy sampling device is a needle.

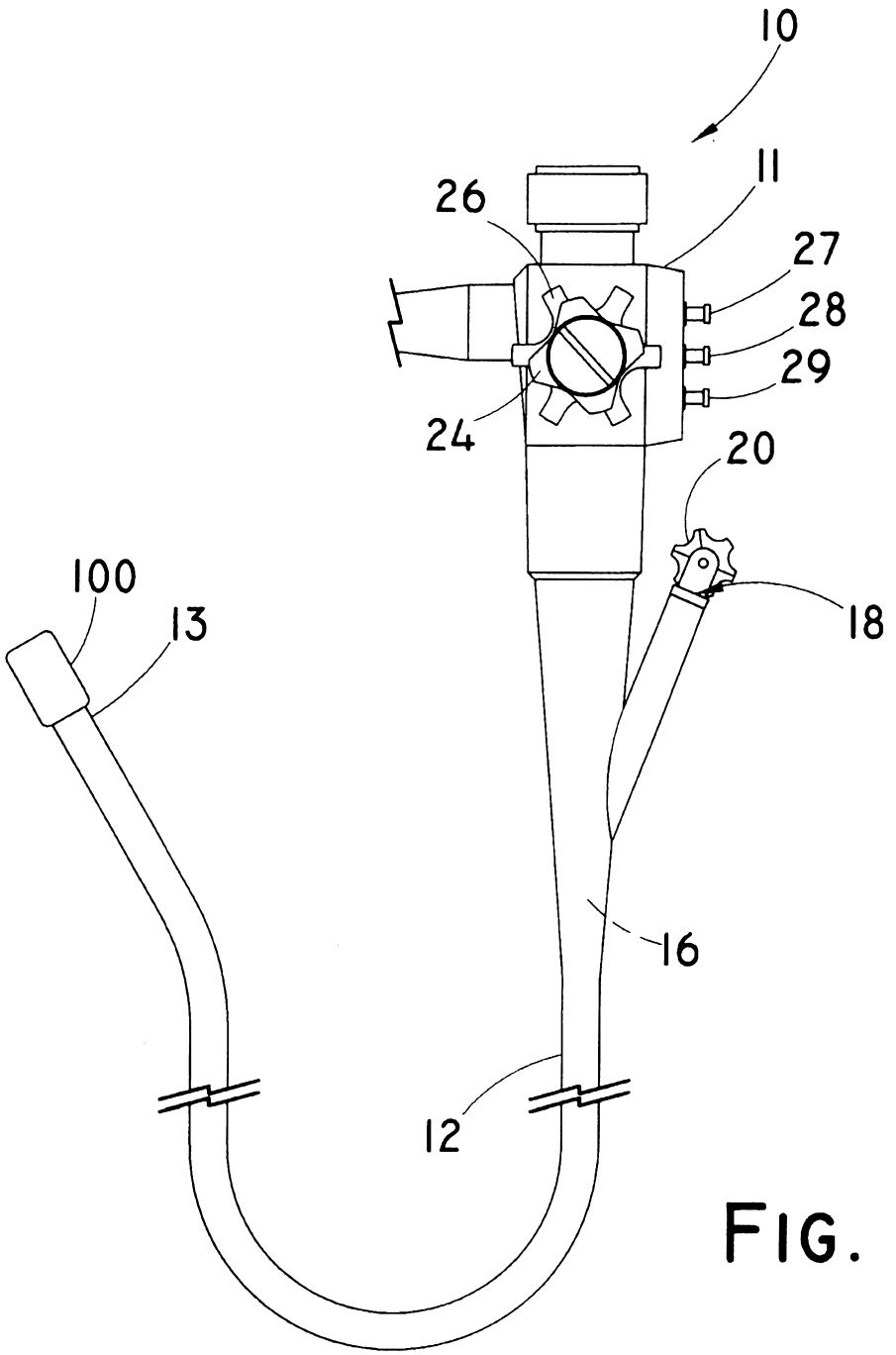

FIG. 1

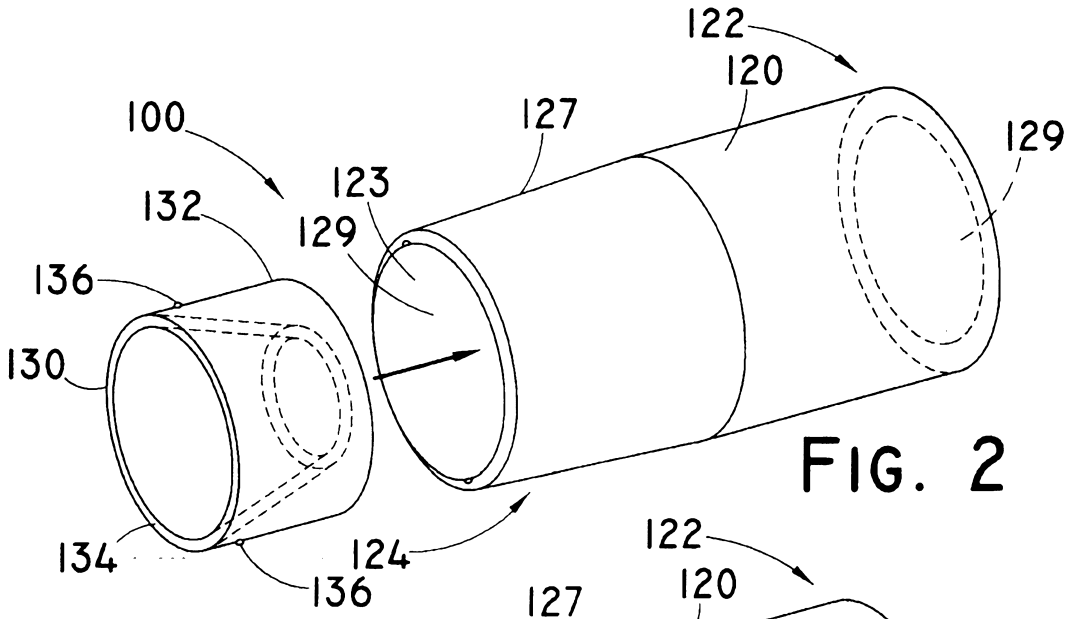

FIG. 2

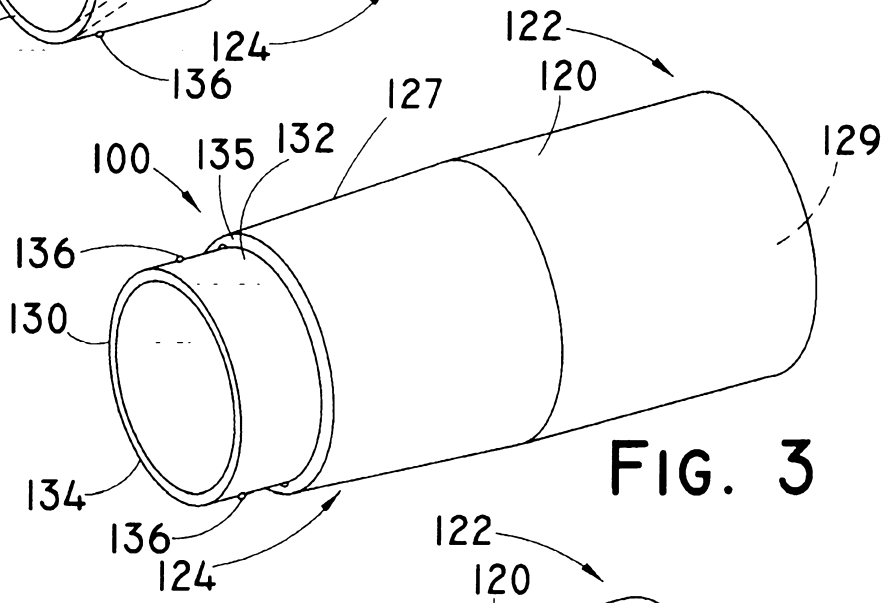

FIG. 3

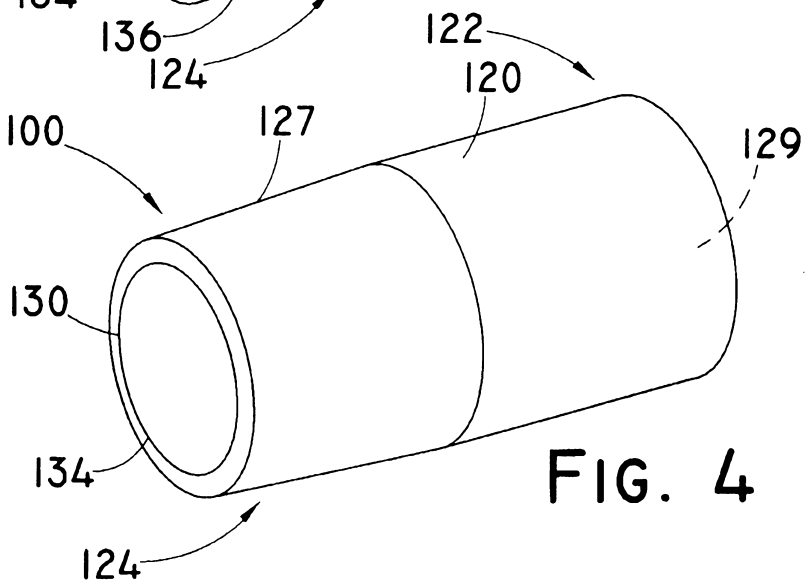

FIG. 4

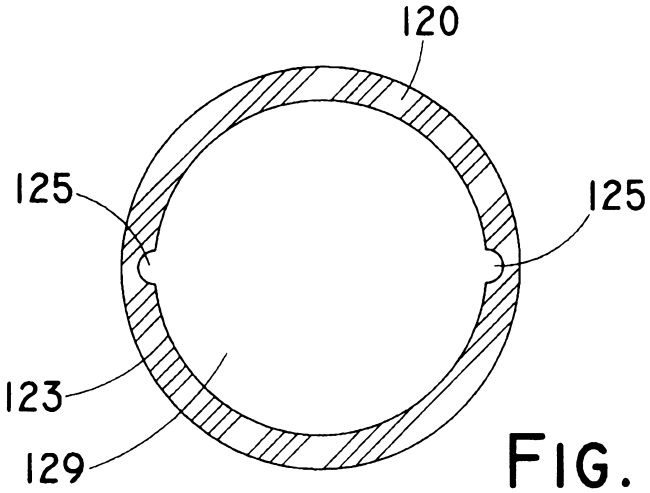

FIG. 5

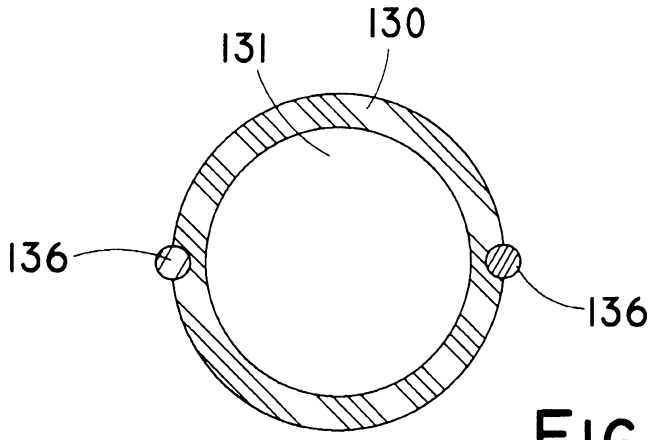

FIG. 6

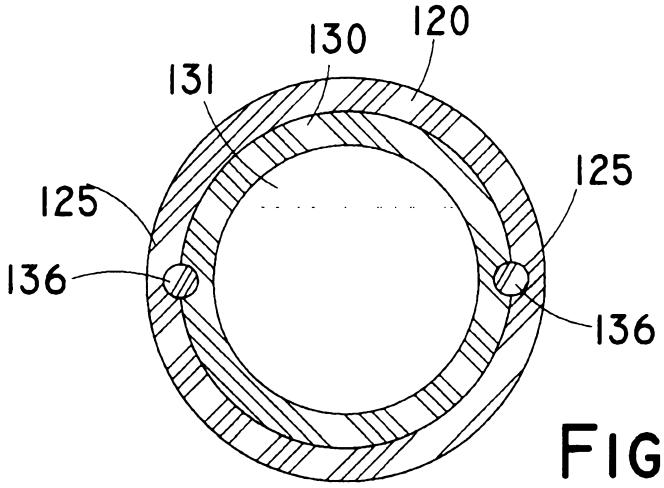

FIG. 7

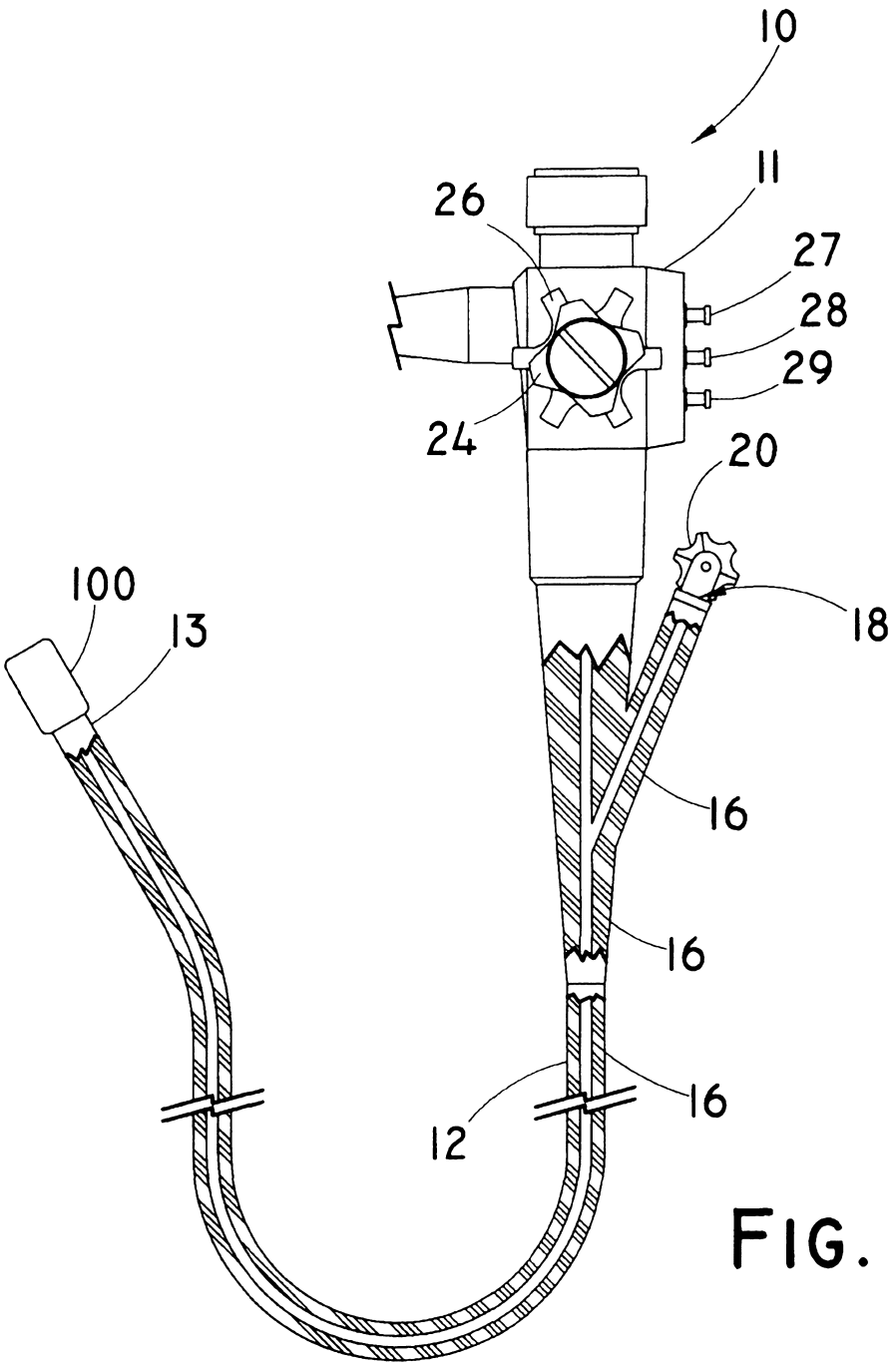

FIG. 8

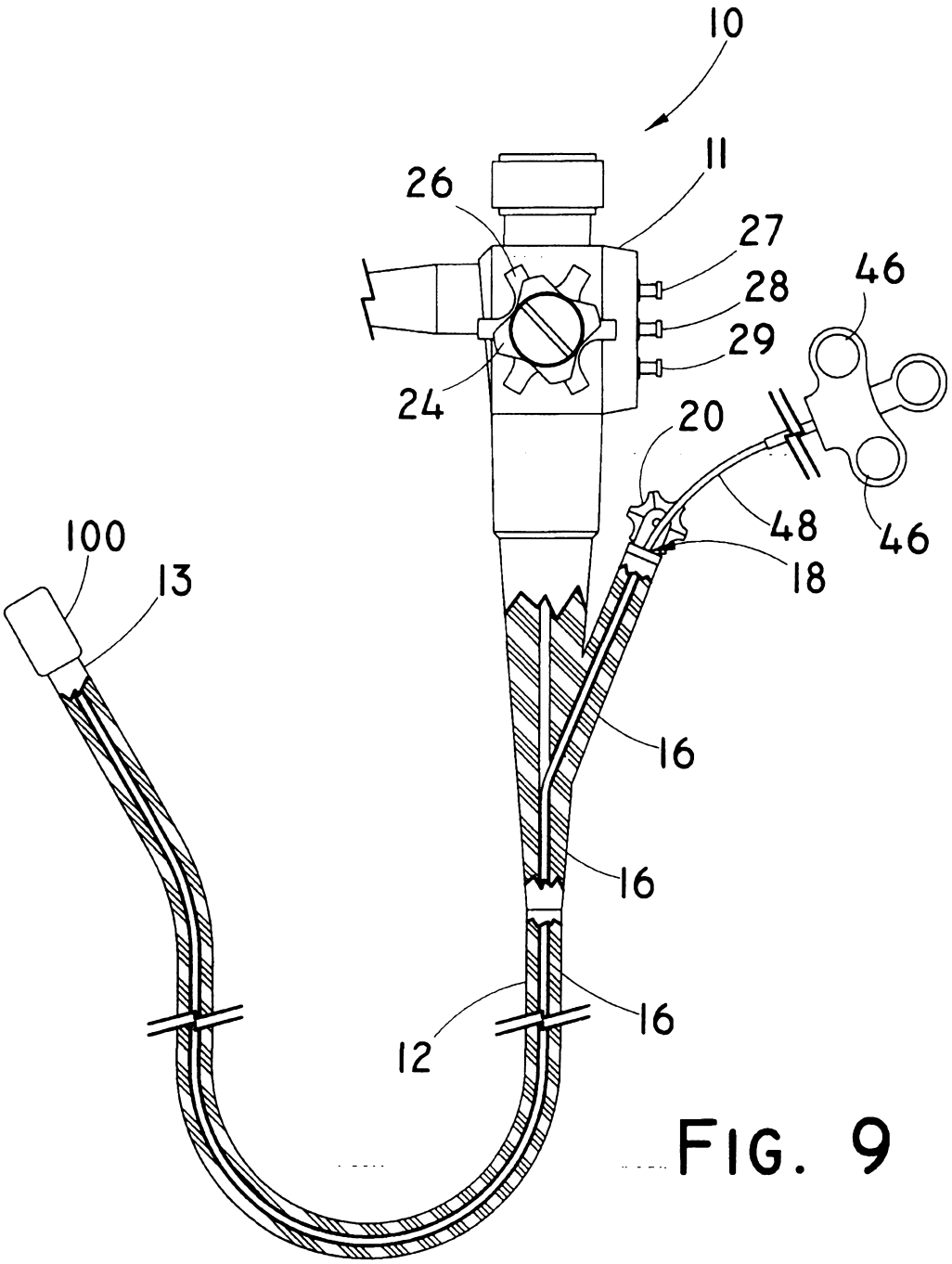

FIG. 9

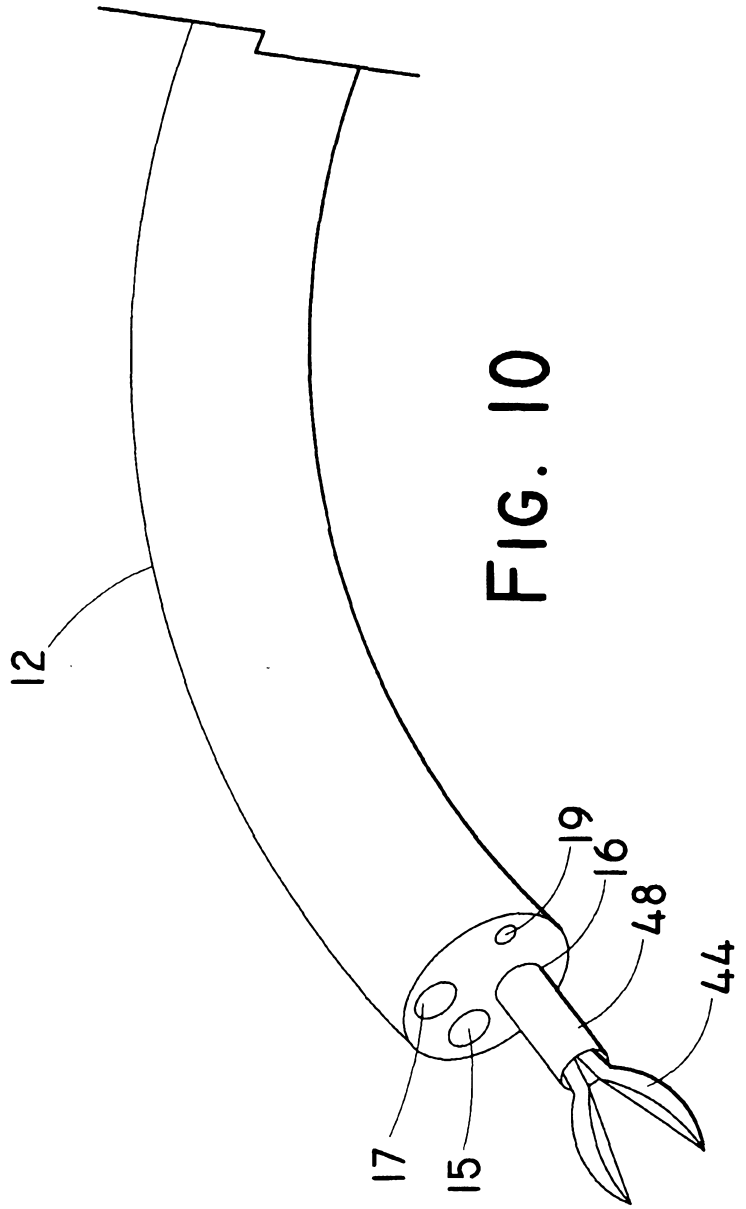

FIG. 10

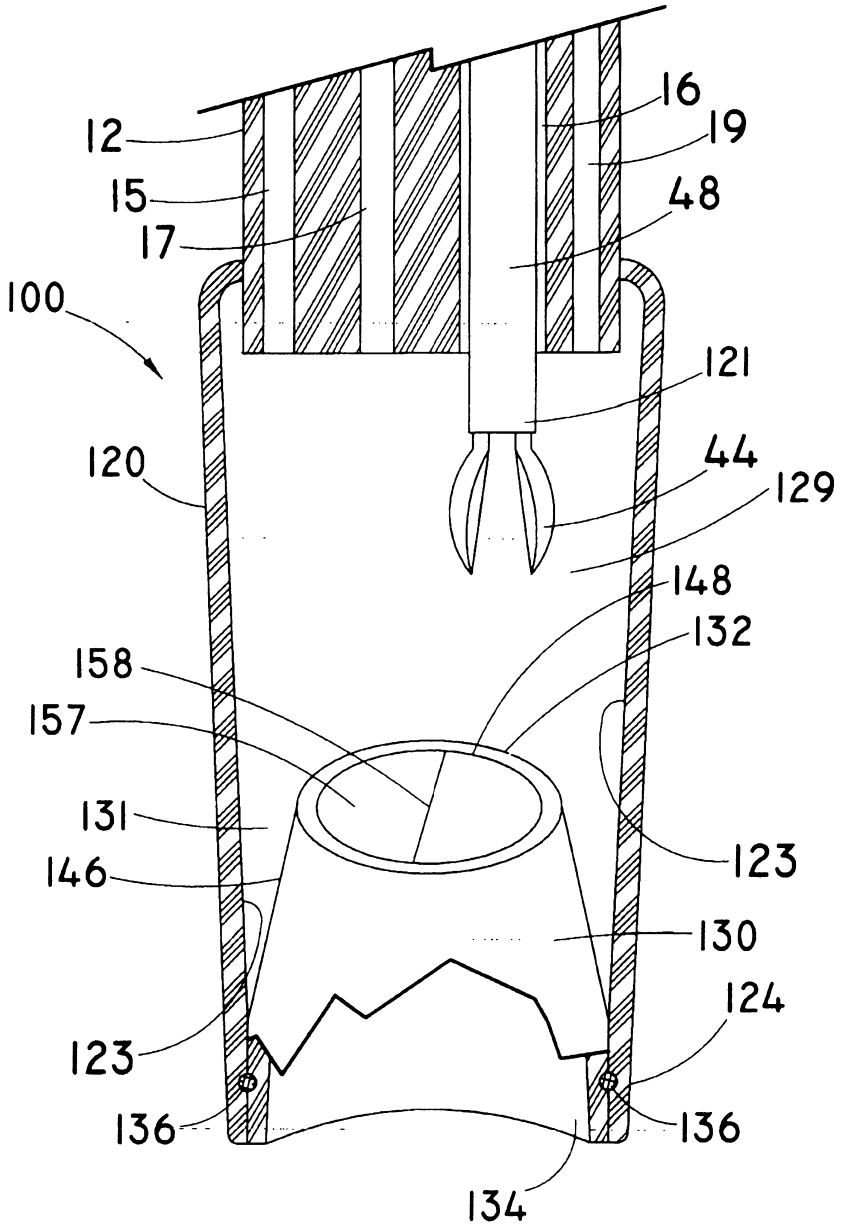
12
15
17
100
16
19
48
121
120
44
129
148
132
158
157
131
146
123
130
124
123
136
136
134

FIG. 11

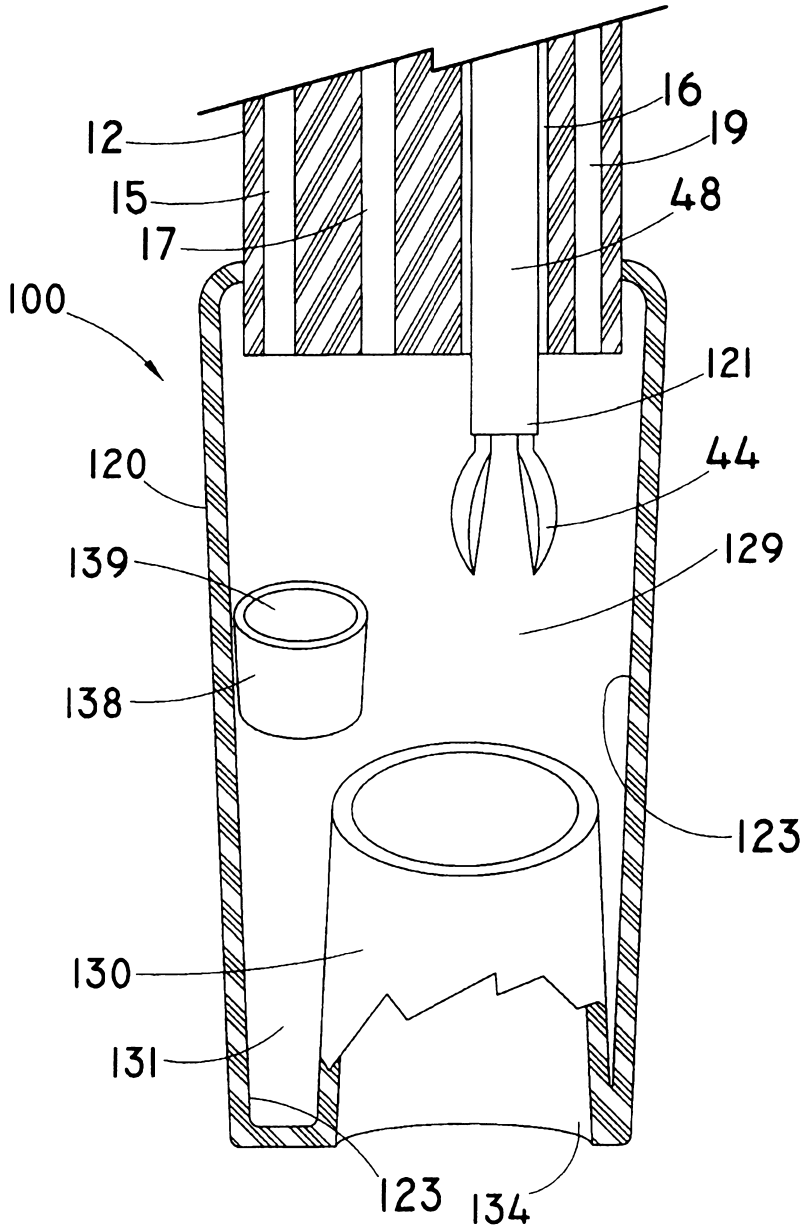

FIG. 12

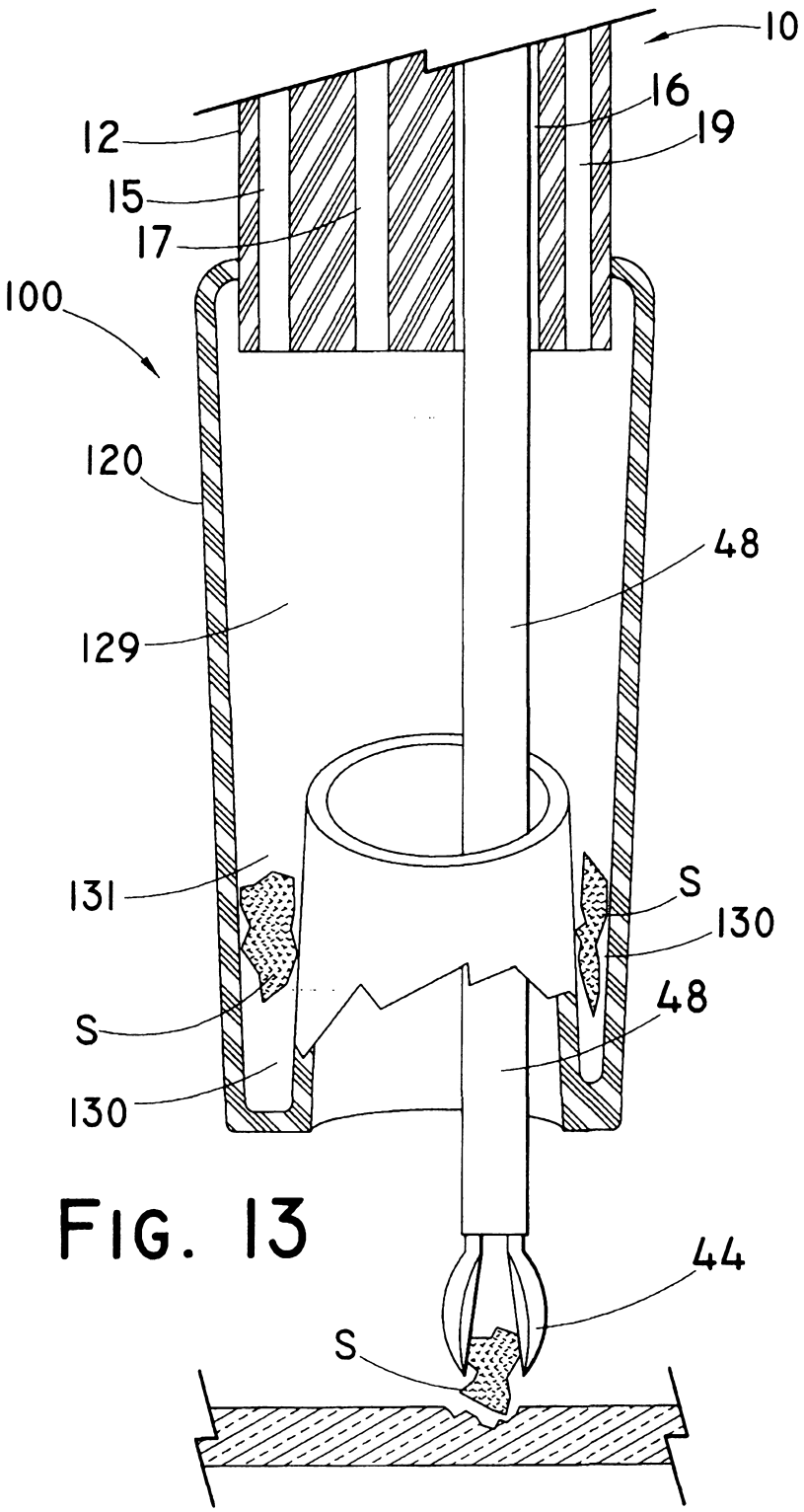

FIG. 13

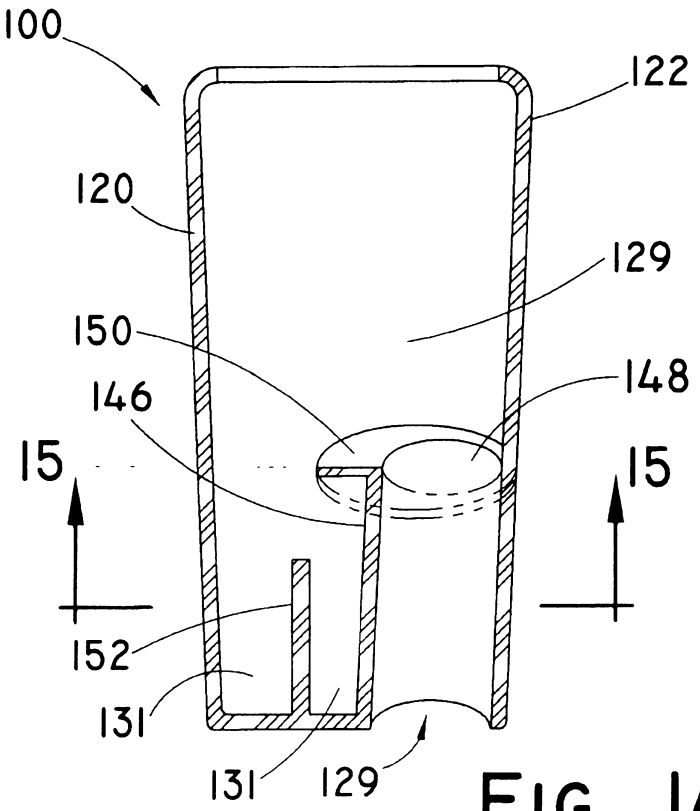
100
122
120
129
150
148
146
15
15
152
131
131
129

FIG. 14

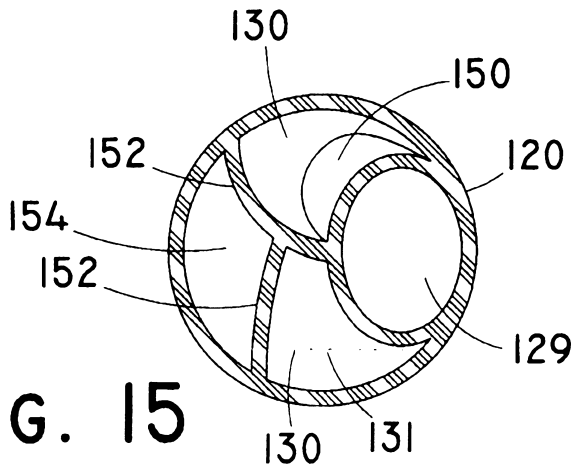
130
150
152
120
154
152
129
130
131

FIG. 15

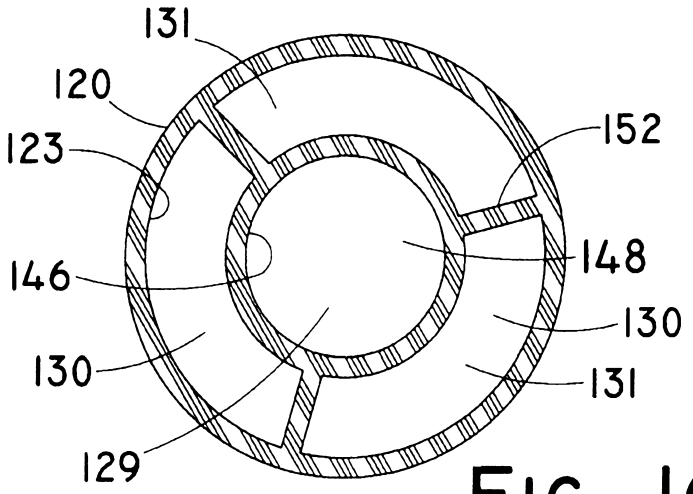
131
120
123
152
148
146
130
130
131
129

FIG. 16

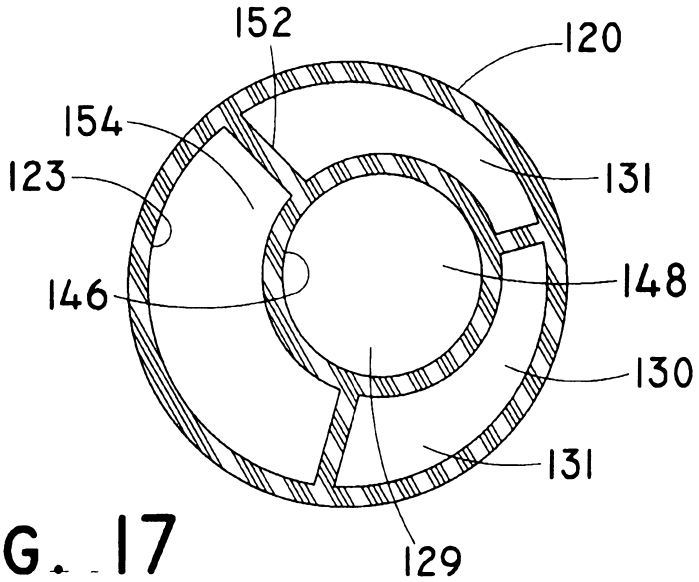
152
120
154
131
123
148
146
130
131
129

FIG. 17

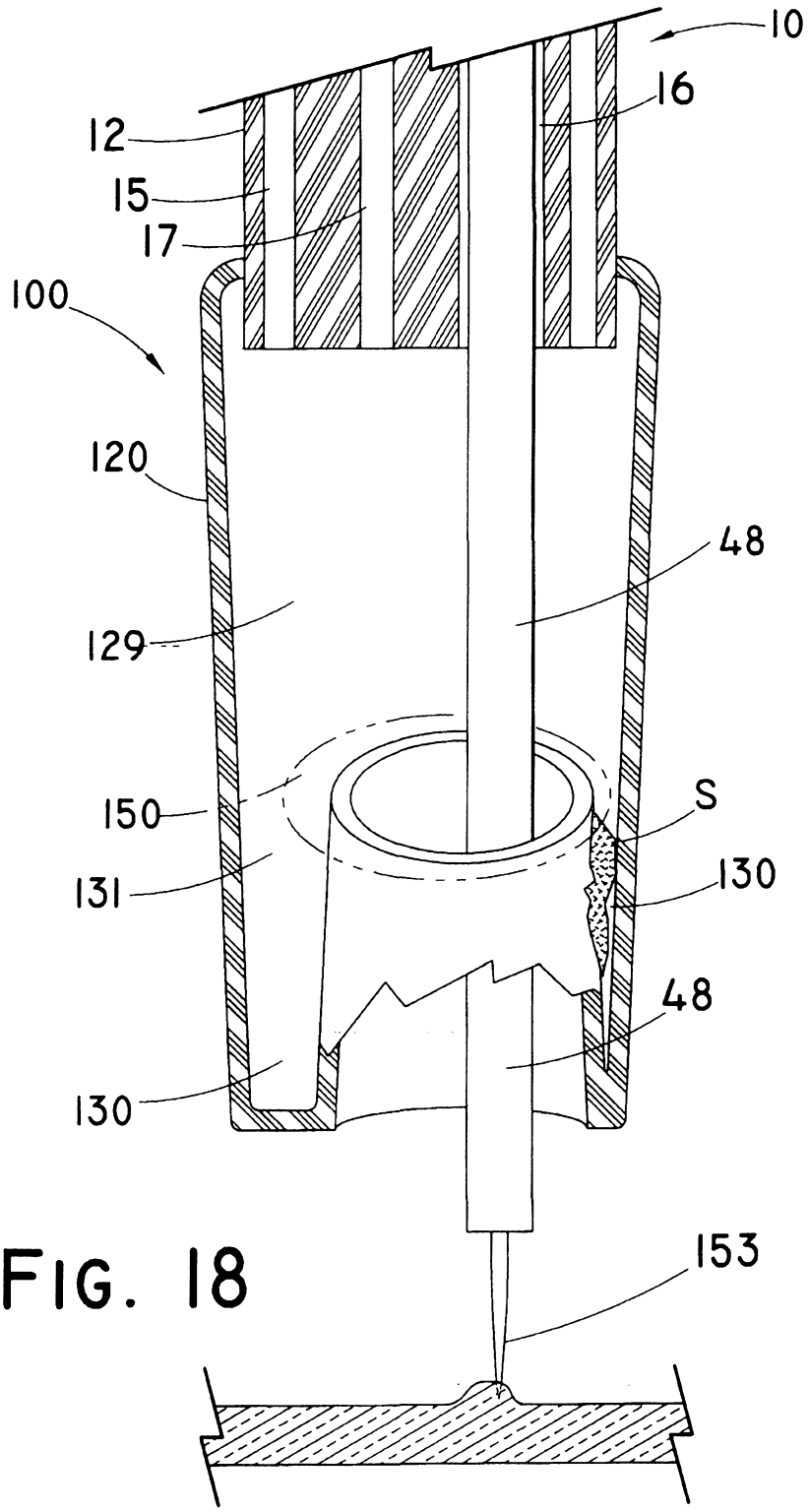

FIG. 18