(12) PATENT
(19) AUSTRALIAN PATENT OFFICE

(11) Application No. AU 200053628 B2
(10) Patent No. 756709

(54) Title
Friction stir joining method

(51)[6] International Patent Classification(s)
B23K 033/00 B23P 011/00
B23K 020/12

(21) Application No: 200053628 (22) Application Date: 2000.08.24

(30) Priority Data

(31) Number	(32) Date	(33) Country
11-332855	1999.11.24	JP

(43) Publication Date : 2001.05.31
(43) Publication Journal Date : 2001.05.31
(44) Accepted Journal Date : 2003.01.23

(71) Applicant(s)
Hitachi, Ltd.

(72) Inventor(s)
Masakuni Ezumi; Kazusige Fukuyori; Yoshihiko Ina; Tetsuya Matsunaga

(74) Agent/Attorney
DAVIES COLLISON CAVE,1 Little Collins Street,MELBOURNE VIC 3000

(56) Related Art
EP 893190
JP 11-028583
JP 11-267859

AUSTRALIA

PATENTS ACT 1990

COMPLETE SPECIFICATION

NAME OF APPLICANT(S):

Hitachi, Ltd.

ADDRESS FOR SERVICE:

DAVIES COLLISON CAVE
Patent Attorneys
1 Little Collins Street, Melbourne, 3000.

INVENTION TITLE:

Friction stir joining method

The following statement is a full description of this invention, including the best method of performing it known to me/us:-

Abstract of the Disclosure:

An abutted portion of face plates 12b and 22b of frame members 10 and 20 is carried out a friction stir joining. With the abutting, a raised portion 20c of an end portion of the face plate 20b of the frame member 20 is inserted into a recessed portion 12c of an end portion of the face plate 12b of the frame member 10. By this inserting-into, to an outer face of one face side of the face plates 12b and 20b there is no difference step. Next, to the inserting-into portion a rotary tool 250 is inserted from the raised portion 16 and 26 side of one face side of the face plates 12b and 20b, a side of another face 12bc and 20bc of the face plates 12b and 20b is carried out flatly by the friction stir joining. Accordingly, the abut joining can be carried out without the step-wise difference.

[Selection Figure]

Fig. 1

Background of the Invention :

[Technical Field]

The present invention relates to a friction stir joining method. For example, the present invention is suitable for a friction stir joining method of an aluminum alloy made extruded frame member which is used in a railway vehicle or a building structure etc..

[Prior Art]

A friction stir joining method is a method in which by rotating a round rod (it is called as "a rotary tool") which is inserted into a joining portion and moving the rotary tool along to a joining line of extruded frame members, and the friction stir joining portion is heated, softened and plastically fluidized and a solid-stately joined. The rotary tool is comprised of a small diameter portion which is inserted into the friction stir joining portion and a large diameter portion which is positioned at an outside of the small diameter portion of the rotary tool. The small diameter portion and the large diameter portion of the rotary tool have the same axis. A boundary between the small diameter portion and the large diameter portion of the rotary tool is inserted a little into the joining portion. The above stated technique is disclosed, for example in Japanese application patent laid-open publication No. Hei 9-309164 (EP 0797043 A2).

In Fig. 9 of Japanese application patent laid-open publication No. Hei 9-309164 (EP 0797043 A2) a joining of two faces of hollow extruded frame members is carried out from one of the two faces of the hollow extruded frame member. Namely, a plate of one side face is abutted and from another face side of the another member a friction stir joining is carried out. An outer face side of said plate is joined flatly. An end portion of the plate of the another face side is orthogonal to a thickness direction.

Further, in Fig. 7 of Japanese application patent laid-open publication No. Hei 9-309164 (EP 0797043 A2) by joining the member having a raised portion is joined and as a result a good friction stir joining is shown.

As shown in Fig. 9 of the above stated Japanese application patent laid-open publication No. Hei 9-309164 (EP 0797043 A2), a case where two plates (the extruded frame members) having the long size, for example about 25 m, are abutted and are joined is taken into the consideration. During the joining the joining at a condition where the plate of the joining portion is pressed under from an upper portion, the friction stir joining is carried out. The means for pressing under is a pressing-under metal fitting means or a roller which moves together with the rotary tool. Further, after the two plates have been welded temporarily with a predetermined pitch, by pressing under the two frame members, the friction stir joining is carried out. When the plate is the long size material, there is a case in which the end portion of the plate is deformed with

a waveform shape in a longitudinal direction. In this case, as shown in Fig. 7, in the abutted portion, in the end portion of the two plates B1 and B2, there causes a step-wise difference in an upper and lower direction. This step-wise difference can be removed by pressing under from the upper portion.

However, to remove the above stated step-wise difference, it is necessary to make small the pitch of the pressing-under metal fixing means, then the apparatus becomes a high cost. Further, after the temporary fixing welding, when the friction stir joining is carried out, it is necessary to remove be the step-wise difference and similarly there is a problem. When the condition where there is the step-wise difference, after that it is impossible to remove the step-wise difference.

Summary of the Invention

The present invention provides a friction stir welding method comprising the steps of:

abutting an end portion of a first plate and an end portion of a second plate;

providing a protrusion on said end portion of said first plate;

providing a recess on said end portion of said second plate for receiving said protrusion;

arranging said first plate and said second plate so that joint faces thereof are closely opposed and side faces thereof are, as seen in cross-section across a joint line, co-linear with each other across a joint;

when the abutting is carried out, inserting said protrusion into said recess;

to said end portion of said first plate, providing a first raised portion which projects on one side of said end portion of said first plate;

to said end portion of said second plate, providing a second raised portion which projects on one side of said end portion of said second plate;

arranging said protrusion so as to extend across at least a part of said first raised portion of said first plate; and

friction stir welding said abutted end portions using a rotary tool.

The present invention further provides a friction stir welding method comprising the steps of:

AUSTRALIAN PATENT OFFICE

abutting an end portion of a first plate and an end portion of a second plate;

providing a protrusion on said end portion of said first plate;

providing a recess on said end portion of said second plate for receiving said protrusion;

arranging said first plate and said second plate so that joint faces thereof are closely opposed and side faces thereof are, as seen in cross-section across a joint line, co-linear with each other across a joint;

when the abutting is carried out, inserting said protrusion into said recess;

to said end portion of said first plate, providing a first raised portion which projects on one side of said end portion of said first plate;

to said end portion of said second plate, providing a second raised portion which projects on one side of said end portion of said second plate;

forming said recess so as to extend into at least a part of said second raised portion of said second plate; and

friction stir welding said abutted end portions using a rotary tool.

The present invention further provides a manufacturing method of a structural body comprising the steps of:

abutting an end portion of a first plate and an end portion of a second plate;

providing a protrusion on said end portion of said first plate;

providing a recess on said end portion of said second plate for receiving said protrusion;

arranging said first plate and said second plate so that joint faces thereof are closely opposed and side faces thereof are, as seen in cross-section across a joint line, co-linear with each other across a joint;

when the abutting is carried out, inserting said protrusion into said recess;

to said end portion of said first plate, providing a first raised portion which projects on one face side of said end portion of said first plate;

to said end portion of said second plate, providing a second raised portion which projects on one face side of said end portion of said second plate;

PATENT OFFICE AUSTRALIAN

arranging said protrusion so as to extend across at least a part of said first raised portion of said first plate;

inserting a rotary tool into said abutted end portions from said one face side of said first plate and said one face side of said second plate;

friction stir welding said abutted end portions so as to provide a substantially flat surface to another face side of said first plate and another face side of said second plate; and

positioning one side face of a body obtained by the friction stir welding so as to present said substantially flat surface as an outer face of said structural body.

The present invention further provides a manufacturing method of a structural body comprising the steps of:

abutting an end portion of a first plate and an end portion of a second plate;

providing a protrusion on said end portion of said first plate;

providing a recess on said end portion of said second plate for receiving said protrusion;

arranging said first plate and said second plate so that joint faces thereof are closely opposed and side faces thereof are, as seen in cross-section across a joint line, co-linear with each other across a joint;

when the abutting is carried out, inserting said protrusion of said first plate into said recess;

to said end portion of said first plate, providing a first raised portion which projects on one face side of said end portion of said first plate;

to said end portion of said second plate, providing a second raised portion which projects on one face side of said end portion of said second plate;

arranging said recess so as to extend into at least a part of said second raised portion of said second plate;

inserting a rotary tool into said abutted end portions from said one face side of said first plate and said one face side of said second plate;

friction stir welding said abutted end portions so as to provide a substantially flat surface to another face side of said first plate and another face side of said second plate; and

PATENT OFFICE AUSTRALIA

positioning one side face of a body obtained by the friction stir welding so as to present said substantially flat surface as an outer face of said structural body.

The present invention further provides a friction stir welding method comprising the steps of:

abutting an end portion of a first plate and an end portion of a second plate;

providing a protrusion on said end portion of said first plate;

providing a recess on said end portion of said second plate for receiving said protrusion;

providing first and second raised portions on a same face side of respective said end portions of said first and second plates such that when said end portions are abutted, said first and second raised portions are aligned, wherein said recess is formed so as to extend into at least a part of said second raised portion and wherein said protrusion is formed so as to extend across at least a part of said first raised portion;

when the abutting is carried out, inserting said protrusion into said recess; and

friction stir welding said abutted end portions using a rotary tool by positioning substantially an axial center of said rotary tool in a position of a half depth of the depth of said recessed portion of said second plate.

The present invention further provides a frame member for use in friction stir welding, wherein the frame member comprises:

an end portion of one plate, constituting a part of said frame member upon which a friction stir welding may be carried out, having a raised portion which projects in a thickness direction of said one plate; and

in said end portion of said one plate, a recess is provided in an end face in a perpendicular direction to said thickness direction of said one plate; wherein

said recess is formed so as to extend into at least a part of said raised portion of said one plate.

The present invention further provides a frame member for use in friction stir welding, wherein the frame member comprises:

an end portion of one plate, constituting a part of a frame member upon which a friction stir welding may be carried out, having a raised portion which projects in a thickness direction of said one plate; and

AUSTRALIAN PATENT OFFICE

in said end portion of said one plate and in an end face of a perpendicular direction to said thickness direction of said one plate, a protrusion is provided which projects in said perpendicular direction; wherein

said protrusion is formed so as to extend across at least a part of said raised portion of said one plate.

The present invention further provides a frame member for use in friction stir welding, wherein the frame member comprises:

a first face plate;

a second face plate which is arranged substantially parallel to said first face plate and has a projected end portion which projects beyond an end portion of said first plate; and

a rib for connecting said first face plate and said second face plate; wherein

said projected end portion of said second face plate is a portion upon which a friction stir welding may be carried out and said end portion of said second plate has a raised portion which projects from one face side in a thickness direction of said second face plate;

in said end portion of said second face plate, a recess is provided in an end face in a perpendicular direction to said thickness direction of said second face plate; and

said recess is formed so as to extend into at least a part of said raised portion of said second face plate.

The present invention also provides a frame member for use in friction stir welding, wherein the frame member comprises:

a first face plate;

a second face plate arranged substantially parallel to said first face plate and having a projected end portion which projects beyond an end portion of said first face plate; and

a rib for connecting said first face plate and said second face plate; wherein

said projected portion of said second face plate is a portion upon which a friction stir welding may be carried out and said end portion of said second face plate has a raised portion which projects from one face side in a thickness direction of said second face plate;

in said end portion of said second face plate, a protrusion is provided in an end face in a perpendicular direction to said thickness direction of said second face plate; and

AUSTRALIAN PATENT OFFICE

said protrusion is formed so as to extend across at least a part of said raised portion.

AUSTRALIAN PATENT OFFICE

Brief Description of the Drawings:

Fig. 1 is a longitudinal cross-sectional view showing an abut joining portion according to one embodiment of the present invention;

Fig. 2 is a longitudinal cross-sectional view showing joining portions before joining as in the embodiment of Fig. 1;

Fig. 3 is a longitudinal cross-sectional view showing after a joining portions after joining as in the embodiment of Fig. 1;

Fig. 4 is a longitudinal cross-sectional view showing a hollow frame member of one embodiment of the present invention;

Fig. 5 is a longitudinal cross-sectional view showing a pair of hollow frame members according to one embodiment of the present invention;

Fig. 6 is a perspective view showing a car body of a railway vehicle; and

Fig. 7 is a longitudinal cross-sectional view showing an abut portion according to the prior art.

Description of the Invention:

One embodiment of a structure body and a manufacturing method of a structure body according to the present invention will be explained from Fig. 1 to Fig. 6. Fig. 1 is an enlarged view showing an abutted portion of Fig. 4. Fig. 2 is an enlarged view of the abutted portion shown in Fig. 1 and shows a view

AUSTRALIAN PATENT OFFICE

of a condition of the abutted portion before the abutting of the extruded frame members, and Fig. 3 shows a condition of after the abutting. Fig. 4 is an enlarged view of an essential portion of Fig. 5. Fig. 5 is a longitudinal cross-sectional view of a side structure body of Fig. 6.

A car body 200 is comprised of a side structure body 201 for constituting a side face of the car body 200, a roof structure body 202 for constituting a roof of the car body 200, a stand frame 203 for constituting a floor of the car body 200, and a side structure body 204 for constituting an longitudinal direction end portion of the car body 200. Each of the side structure body 201, the roof structure body 202, and the stand frame 203 is constituted respectively by joining plural extruded frame members. A longitudinal direction of the extruded frame member is formed toward a longitudinal direction of the car body 200. The extruded frame member is a hollow frame member made of an aluminum alloy.

A constitution and a joining method of a hollow extruded frame member 10 and a hollow extruded frame member 20 for constituting the side structure body 201 will be explained. Other portions and other structure bodies are similar to the above.

The hollow frame member 10 and the hollow extruded frame member 20 are comprised of two sheet face plates 11, 12 and 21, 22 and truss shape arranged plural ribs 13 and 23. The two sheet face plates 11 and 12 (the two sheet face plates 21 and 22) are substantially in parallel. A pitch of the truss

structure according to ribs 13 and 23 is the same. The truss structure is constituted by the ribs 13 and 23 and a center line of a plate thickness of the face plates 11 and 12 and the face plates 21 and 22. An apex exists at a side of the face plates 11 and 12 and the face plates 21 and 22.

At a vicinity of the apex of the truss structure in an inner side of the railway car, rails 19 and 29 for installing machines and apparatuses are provided integrally. The rails 19 and 29 are each comprised of two L shaped members. The rails 19 and 20 are seats for installing the machines and apparatuses such as interior mounting plates and chairs, etc..

End portions of the face plates 12 and 22 which are positioned an outer face side of the car body project to a side of the adjacent hollow frame members 20 and 10 from the end portions of the face plates 11 and 21 in the car body side. These projected face plates are indicated by 12b and 22b. By abutting end portions of the face plates 12b and 22b to each other, the friction stir joining is carried out. The plate thickness of each of the face plates 12b and 22b is greater than that of other portions of the face plates 12 and 22.

The hollow frame members 10 and 20 are mounted on a bed 40 by laying them with the face plates 12 and 22 lower most. The sides of the face plates 11 and 21 form an upper portion. A rotary tool 250 is inserted at the abutted portion from the upper portion and friction stir joining is carried out. The friction stir joining is carried out from the inner side of the car.

At the end portions of the face plates 12b and 22b, there are provided raised portions 16 and 26 which project in the car inner side (namely, the side at which the face plates 11 and 21 are located). The width and height of the raised portions 16 and 26 are substantially the same.

Between the end portion of the face plate 11 in the car inner side and the face plate 21 there extends a connection member 30. One end portion of the connection member 30 is mounted (overlapped) to a seat 27 which is provided on the apex of the truss structure. The other end portion of the connection member 30 is mounted (overlapped) to a seat 17 which is provided on the apex of the truss structure. The seat 27 is arranged at an intersecting point between the rib 23A and the rib 23B. The seat 17 is arranged at an intersecting point between the rib 13A and the rib 13B. At a center of the width of the seat 27 the first above stated intersecting point is arranged. At a center of the width of the seat

AUSTRALIAN PATENT OFFICE

17 the second above stated intersecting point is arranged. Namely, the apex of the truss structures are arranged at the central portion of the width of the respective seats 27 and 17. The width of the seat 27 is similar to the width of the raised portion 35 of the connection member 30 and the width of the seat 17 is similar to the width of the raised portion 35 of the connection member 30. The seat 27 is recessed from the outer face of the face plate 21 and the seat 17 is recessed from the outer face of the face plate 11.

The end portion 27b of the face plate 21 is inclined as a groove for the arc welding to the connection member 30 and the end portion 17b of the face plate 11 is inclined as a groove for the arc welding to the connection member 30.

The connection member 30 is arranged to form a continuous outer surface with surfaces of the plate plates 11 and 21. For this reason, the seat 27 (17) is recessed to thickness corresponding to the thickness of the face plate 21 (11). The central portion of the connection member 30, between raised end portions 35 thereof as viewed in Figure 4, is formed as a plate 31 of thickness substantially the same as the plate thickness of the face plate 21 (11).

The raised portions 35 which project to an upper portion is provided at both ends of the connection member 30. An upper face of each raised portion 35 has V-shape groove 36. The groove 36 is arranged at a center of the width of the raised portion 35. A width of the raised portion 35 is larger than a diameter of a large diameter portion 252 of the rotary tool 250. The grooves 36 are used for position detecting to lead the movement of the rotary tool 250. The groove 36 is detected by a laser sensor and the axial center of the rotary tool 250 is coincided with the groove 36. On an imaginary extension line of the groove 36, which coincides with the axial center of the rotary tool 250, there is an intersection point of rib 13A (23A) and rib 13B (23B).

The width of the connection member 30 is smaller than an interval of the face plates 11 and 21 of the two hollow frame members 10 and 20. The connection member 30 is made of the extruded frame member having the same material as the hollow frame members 10 and 20. A length of the connection member 30 is the same of the length of the hollow frame members 10 and 20.

A distance P from the end portion of the face plate 11 to the end portion of the face plate 21 (a distance from the apex of the truss structure of the end portion of the hollow

AUSTRALIAN PATENT OFFICE

frame member 10 to the apex of the truss structure of the end portion of the hollow frame member 20) is the same distance separating the apexes of the truss structures of the other positions.

The truss structures formed by ones of the ribs 13 and 23 and adjacent portions of face plates 11, 12, and 21, 22 are generally in the form of isosceles triangles, except at ends of the face plates, as viewed in transverse section Figure 5.

For the above stated reason, the rib 13A (23A) is connected to a midway of the face plate 12 (22) and the rib 23B is connected to a midway of the face plate 22. Between a connection portion between the rib 13A and the face plate 12 and a connection portion between the rib 23A and the face plate 22, a space for inserting the friction stir joining apparatus is formed.

Since the ribs 13A and 23A are at a steeper vertical angle (such that θ 1 is smaller) in comparison with the ribs 13B and 23B, the plate thickness of the ribs 13A and 23A is made thicker than the plate thickness of the ribs 13B and 23B. The plate thickness of the ribs 13B

[The following page is page 11]

AUSTRALIAN PATENT OFFICE

and 23B are thicker than the plate thickness of other ribs 13. The connection portions between the ribs 13A, 13B and 13 and the face plates 11 and 12, 21 and 22 have an arc shape. Further, the thickness of the connection member 30 is determined according to the strength aspect.

The end portion of the face plates 12b and 22b, namely a construction of the abutted portion will be explained. To the end portion of the face plate 22b a trapezoid shape raised portion 22c which projects in the face plate 22b side is provided. To the end face 12d of the hollow frame member which is adjacent to the end portion of the face plate 12b, a trapezoid shape recessed portion 12c is provided, this recessed portion 12c receives the raised portion 22c of the face plate 22b. When the raised portion 22c enters into the recessed portion 12c, the lower faces 12bc and 22bc (the outer face of the car body) of the face plates 12b and 22b formed the substantial same face.

Further, the end faces 12d and 22d of the face plates 12b and 22b can be contacted. The end faces 12d and 22d of the face plates 12b and 22b, except for the recessed portion 12c and the raised portion 22c, are substantially orthogonal in the thickens directions of the face plates 12b and 22b. A height and a width of the recessed portion 12c are larger a height and a depth of the raised portion 22c. The upper end portions of the recessed portion 12c and the raised portion 22c are formed at an upper portion of an extension line of the upper faces (the inner face of the car body) 12bb and 22bb of the face plates 12b and 22b. Namely, the upper end portions of the recessed

portion 12c and the raised portion 22c form part of the raised portions 16 and 26.

The recessed portion 12c and the raised portion 22c are arranged to the end portion of a rectangular direction against the thickness direction of the face plates 12b and 22b.

The manufacturing method of this structure body will be explained. The hollow frame members 10 and 20 are mounted on and fixed to the bed 40. Next, the face plates 12b and 22b are abutted, and the raised portion 22c of the end portion of the face plate 22b is inserted into the recessed portion 12c of the face plate 12b. With this construction, the lower faces (the outer face of the car body) of the face plates 12b and 22b becomes substantially the same face. When one hollow frame member has a wave form in an upper and lower direction, in accordance with by pressing this hollow frame member from upper portion, the raised portion 22c is inserted into the recessed portion 12c. When the hollow frame member has a wave form in an upper and lower direction, after the abutting the frame member will maintain the wave form or the substantially linear form. The outer faces of the face plates 12b and 22b become substantially the same face. The end faces 12d and 22d contact with, or approach contact with, each other upon insertion of raised portion 22c into recessed portion 12c.

Next, these frame members 10 and 20 are fixed on the bed 40. Next, the portions of the end faces 12d and 22d are fixed temporarily according to the arc welding. This temporary welding is carried out intermittently.

An upper face of the bed 40 on which the abutted portion

AUSTRALIAN PATENT OFFICE

of the face plates 12b and 22b are mounted is flat. Three portions which are the vicinity of the abutted portion of the face plates 12b and 22b, a cross-point vicinity of the ribs 13A and 23A, the face plates 12b and 22b, and a cross-point vicinity of the ribs 13B and 23B and the face plates 12 and 22 are mounted on the bed 40 having the same height.

With this condition, the rotary tool 250 of the friction stir joining apparatus is inserted from the upper portion to the abutted portion of the raised portions 16 and 26 and is moved along to a joining line and then the friction stir joining is carried out. The axial center of the rotary tool 250 is a perpendicular direction (the direction along to the normal line of the joining portion). However, against an advancing direction of the rotary tool 250 the axial center is inclined as already known.

The rotary tool 250 comprises the large diameter portion 252 and the small diameter portion 251 at a tip end of the large diameter portion 252. The tip end of the lower end of the small diameter portion 251 of the rotary tool 250 is positioned at a lower face from an upper face of the face plates 12b and 22b. Namely, a lower end of the large diameter portion 252 of the rotary tool 250 is positioned from the lower end of the recessed portion 12c. The lower end of the large diameter portion 252 of the rotary tool 250 is positioned between the apex of the raised portions 16 and 26 and between the face plates 12b and 22b of the car inner side (the face side of the plates 11 and 21). A diameter of the large diameter portion 252 of the rotary

tool 250 is smaller than a width which is comprised of the two raised portions 16 and 26. The small diameter portion 251 of the rotary tool 250 forms a screw member. The diameter of the small portion 251 is larger than a depth S of the recessed portion 12c. With this construction, the recessed portion 12c and the raised portion 22c of the abutted portion is stirred according to the small diameter portion 251. As shown in Fig. 3, at a portion of ½ from the end face 12d of the depth S of the recessed portion 12c the axial center of the rotary tool 250 is positioned.

During the friction stir joining, the apex face of the raised portions 16 and 26 is pressed from underneath by rollers which move together with the rotary tool 250.

The raised portions 16 and 26 are detected by a laser sensor. According to this, a height position of the raised portions 16 and 26 is detected and an insertion amount of the rotary tool is determined. Further, a gap (between the end faces 12d and 22d) of the abutted portion of the two raised portions 16 and 26 is detected and to this position the axial center of the rotary tool 250 is coincided.

According to this friction stir joining a gap formed between the abutted portion of the face plates 12b and 22b (a gap formed between the end faces 12d and 22d, a gap formed the recessed portion and the raised portion 22c) is buried and joined. The original material of the metal for burying the gap is the raised portions 16 and 26. The outer face side (the outer car side) of the abutted portion is joined flatly. To the outer face side of the face plates 12b and 22b, there is no recessed portion and no step-wise difference of the joining line.

The upper face of the raised portions 16 and 26 becomes a convex form according to the large diameter portion 252 of the rotary tool 250. However, the raised portions 16 and 26 remain at locations to each side of the path of the rotary tool (ie. at the ends thereof away from the location where raised portions 16 and 26 abut, as viewed in Figure 3).

Next, the connection member 30 is mounted on the seats 17 of the face plate 11 and on the seat 27 of the face plate 21. Next, the end portion of the connection member 30 is fixed temporarily to the face plates 11 and 21 by the arc welding. This arc welding is carried out intermittently.

Next, using the friction stir joining apparatus which is used for friction stir joining of the abutted portion of the face plates 12b and 22b, the joining of the connection member

AUSTRALIAN PATENT OFFICE

30 and seats 17 and 27 is carried out. With a condition where the rotary tool 250 is inserted in to a portion to which the connection member 30 and seat 27 are overlapped, the rotary tool 250 is moved along the joining line and the friction stir joining is carried out.

A width of the raised portion 35 is larger than the diameter of the large diameter portion 252 of the rotary tool 250. At a center of the raised portion 35 a groove 36 is provided. The rotation axial center of the rotary tool 250 is coincided with the groove 36. A tip end of the small diameter portion 251 of the rotary tool 250 is inserted deeply to the seats 17 and 27. With this construction, the overlapping joining is carried out. The lower end of the large diameter portion 252 of the rotary tool 250 is positioned between the upper face of the connection member 30 being the non-raised portion and the apex of the raised portion 35.

The upper face of the raised portion 35 become a convex from according to the large diameter portion 252 of the rotary tool 250. The upper face of the raised portion 35 becomes a convex form according to the large diameter portion 252 of the rotary tool 250. At the both ends of the recessed portion, the raised portion 35 is left.

The above stated sensor of the friction stir joining apparatus detects the groove 36 and along to the groove 36 the rotary tool 250 is moved.

The axial center of the rotary tool 250 is positioned at the apex point of the truss structure of the two ribs 13A and 13B (23A and 23B), or in the vicinity of the apex. Because of this, it is necessary to increase the plate thickness of the ribs 13A and 13B (23A and 23B), the angle of the arc which connects the ribs 13A, 23A and the face plates 12, 22, the thickness of the connection member 30 and the thickness of the seats 17 and 27.

Friction stir joining of the connection member 30 may be carried out first with the joining of the seat 17, after which the joining of the seat 27 is carried out. Alternatively, when two rotary tools are used, the joining of the both ends of the connection member 30 can be carried out at the same time.

According to the above stated construction, the joining of the both faces of the hollow frame member is carried out from one side face. For this reason, it is unnecessary to reverse the structure body to which one face is joined. Accordingly, the structure can be manufactured at a low cost and with a high accuracy.

Further, the outer face of the joining portion of the face plates 12b and 22b can be

AUSTRALIAN PATENT OFFICE

joined flatly. The raised portions 16, 26 and 35 are arranged in the structure body and the inner side of the car body and the raised portions 16, 26 and 35 are not existed at a portion (the outer face side, the car outer side) in which a flat face is required. Further, at the car outer side there is no raised portion created by the action of the rotary tool. For this reason, the cut-off etc. of the raised portion is unnecessary and the car body can be manufactured at a low cost.

Further, since the abutted portion of the face plates 12b and 26b is inserted into according to the recessed portion 12c and the raised portion 22c, the two face plates 12b and 22b become as one body, the outer face of the one body become substantially the same face. For this reason, there is no step-wise difference as in the prior technique and, after the friction stir joining, the cut-off of raised portions on the outer face side is unnecessary. Further, since the plate thickness of the face plates 11b and 22b is not lowered, the frame member can be made with the light weight structure. Of course, some cut-off can be carried out according to the demands.

The raised portion 22c is the trapezoid shape, this raised portion 22c can enters easily to the recessed portion 12c. A

[The following page is page 18]

AUSTRALIAN PATENT OFFICE

size of the tip end of the raised portion 22c can be formed a smaller shape than the side of the end face 22d, for example a triangle shape. On the other hand, with the similar aim, a bottom of the recessed portion 12c can be formed a smaller shape than the side of the end face 12d, for example a triangle shape.

To the abutted portion of the face plates 12b and 22b since there are the raised portions 16 and 26, a gap between the raised portion 22c and the recessed portion 12c can be compensated by the metal.

The axial center of the rotary tool 250 can be positioned at a position of the end face 12d (22d) of the face plate. However, when a position of a half of the depth of the recessed portion 12c is a target position of the axial center of the rotary tool 250, the diameter of the small diameter portion 251 of the rotary tool 250 can be made small.

Since the end portion of the face plate is formed thick by the raised portions 16 and 26, to the end portion of the face plate the recessed portion 12c and the raised portion 22c can be installed easily. Accordingly, the raised portions 16 and 26 can be utilized effectively.

The portion for mounting the connection member 30 can be set at the structure and the portion in which it can bear to the load during the friction stir joining. For example, the structure and the portion can be set as shown in Fig. 9 of the above stated Japanese application patent laid-open publication No. Hei 9-309164 (EP 0797043A2).

The frame member of the above stated embodiment is the

hollow frame member, however the hollow portion is not unnecessary. Further, to the face plates 16, 16b and 22, 22b only the rib can be provided.

Further, the bed 40 can be replaced by a backing member such as a roller etc..

Further, the member which is joined by the above stated manner can be used as an outer face (a face to be viewed by eye) of the structure member such as a building structure.

A technical range according to the present invention is not limited by the wordings defined in each claim of what is claimed is or the wordings stated on the means for solving the problems and further it refers also to the range in which the man belonged in this technical field can be placed easily.

According to the present invention, after the insertion-into of the abutted portion of the plates of the frame members, since the friction stir joining is carried out, the plate ca be joined with no step-wise difference.

Throughout this specification and the claims which follow, unless the context requires otherwise, the word "comprise", and variations such as "comprises" and "comprising", will be understood to imply the inclusion of a stated integer or step or group of integers or steps but not the exclusion of any other integer or step or group of integers or steps.

The reference to any prior art in this specification is not, and should not be taken as, an acknowledgment or any form of suggestion that that prior art forms part of the common general knowledge in Australia.

THE CLAIMS DEFINING THE INVENTION ARE AS FOLLOWS:

1. A friction stir welding method comprising the steps of:

abutting an end portion of a first plate and an end portion of a second plate;

providing a protrusion on said end portion of said first plate;

providing a recess on said end portion of said second plate for receiving said protrusion;

arranging said first plate and said second plate so that joint faces thereof are closely opposed and side faces thereof are, as seen in cross-section across a joint line, co-linear with each other across a joint;

when the abutting is carried out, inserting said protrusion into said recess;

to said end portion of said first plate, providing a first raised portion which projects on one side of said end portion of said first plate;

to said end portion of said second plate, providing a second raised portion which projects on one side of said end portion of said second plate;

arranging said protrusion so as to extend across at least a part of said first raised portion of said first plate; and

friction stir welding said abutted end portions using a rotary tool.

2. A friction stir welding method according to claim 1, wherein said recess is arranged so as to extend into at least a part of said second raised portion of said second plate.

3. A friction stir welding method according to claim 1 or claim 2, wherein the friction stir welding includes inserting said rotary tool into said abutted end portions from said one side of said first plate and said one side of said second plate.

4. A friction stir welding method according to claim 1 or claim 2, wherein:

the abutting includes abutting a face of another side of said first plate and a face of another side of said second plate on a substantial same face; and wherein

the friction stir welding includes inserting said rotary tool into said abutted end portions from said first raised portion of said first plate and said second raised portion of

AUSTRALIAN PATENT OFFICE 30

said second plate and carrying out the friction stir welding so as to provide a substantially flat surface on said another face side of said first plate and said another face side of said second plate.

5. A friction stir welding method according to claim 1, wherein the friction stir welding is performed by positioning deeper a position of a small diameter portion of said rotary tool inserted into said abutted end portions than a bottom portion of said recessed portion of said second plate.

6. A friction stir welding method according to claim 1, wherein the friction stir welding is performed by positioning an axial center of said rotary tool in a position of a half depth of the depth of said recessed portion of said second plate.

7. A friction stir welding method comprising the steps of:

abutting an end portion of a first plate and an end portion of a second plate;

providing a protrusion on said end portion of said first plate;

providing a recess on said end portion of said second plate for receiving said protrusion;

arranging said first plate and said second plate so that joint faces thereof are closely opposed and side faces thereof are, as seen in cross-section across a joint line, co-linear with each other across a joint;

when the abutting is carried out, inserting said protrusion into said recess;

to said end portion of said first plate, providing a first raised portion which projects on one side of said end portion of said first plate;

to said end portion of said second plate, providing a second raised portion which projects on one side of said end portion of said second plate;

forming said recess so as to extend into at least a part of said second raised portion of said second plate; and

friction stir welding said abutted end portions using a rotary tool.

8. A friction stir welding method according to claim 7, wherein the friction stir

AUSTRALIAN PATENT OFFICE

welding includes inserting said rotary tool into said abutted end portions from said one side of said first plate and said one side of said second plate.

9. A friction stir welding method according to claim 7, wherein:

the abutting includes abutting a face of another side of said first plate and a face of another side of said second plate on a substantial same face; and wherein

the friction stir welding includes inserting said rotary tool into said abutted end portions from said first raised portion of said first plate and said second raised portion of said second plate and carrying out the friction stir welding so as to provide a substantially flat surface on said another face side of said first plate and said another face side of said second plate.

10. A friction stir welding method according to claim 7, wherein the friction stir welding is performed by positioning deeper a position of a small diameter portion of said rotary tool inserted into said abutted end portions than a bottom portion of said recessed portion of said second plate.

11. A friction stir welding method according to claim 7, wherein the friction stir welding is performed by positioning an axial center of said rotary tool in a position of a half depth of the depth of said recessed portion of said second plate.

12. A manufacturing method of a structural body comprising the steps of:

abutting an end portion of a first plate and an end portion of a second plate;

providing a protrusion on said end portion of said first plate;

providing a recess on said end portion of said second plate for receiving said protrusion;

arranging said first plate and said second plate so that joint faces thereof are closely opposed and side faces thereof are, as seen in cross-section across a joint line, co-linear with each other across a joint;

when the abutting is carried out, inserting said protrusion into said recess;

to said end portion of said first plate, providing a first raised portion which projects

AUSTRALIAN PATENT OFFICE

on one face side of said end portion of said first plate;

to said end portion of said second plate, providing a second raised portion which projects on one face side of said end portion of said second plate;

arranging said protrusion so as to extend across at least a part of said first raised portion of said first plate;

inserting a rotary tool into said abutted end portions from said one face side of said first plate and said one face side of said second plate;

friction stir welding said abutted end portions so as to provide a substantially flat surface to another face side of said first plate and another face side of said second plate; and

positioning one side face of a body obtained by the friction stir welding so as to present said substantially flat surface as an outer face of said structural body.

13. A manufacturing method according to claim 12, wherein said structural body is part of a rail car.

14. A manufacturing method of a structural body comprising the steps of:

abutting an end portion of a first plate and an end portion of a second plate;

providing a protrusion on said end portion of said first plate;

providing a recess on said end portion of said second plate for receiving said protrusion;

arranging said first plate and said second plate so that joint faces thereof are closely opposed and side faces thereof are, as seen in cross-section across a joint line, co-linear with each other across a joint;

when the abutting is carried out, inserting said protrusion of said first plate into said recess;

to said end portion of said first plate, providing a first raised portion which projects on one face side of said end portion of said first plate;

to said end portion of said second plate, providing a second raised portion which projects on one face side of said end portion of said second plate;

arranging said recess so as to extend into at least a part of said second raised

AUSTRALIAN PATENT OFFICE

portion of said second plate;

inserting a rotary tool into said abutted end portions from said one face side of said first plate and said one face side of said second plate;

friction stir welding said abutted end portions so as to provide a substantially flat surface to another face side of said first plate and another face side of said second plate; and

positioning one side face of a body obtained by the friction stir welding so as to present said substantially flat surface as an outer face of said structural body.

15. A manufacturing method according to claim 14, wherein said structural body is part of a rail car.

16. A friction stir welding method comprising the steps of:

abutting an end portion of a first plate and an end portion of a second plate;

providing a protrusion on said end portion of said first plate;

providing a recess on said end portion of said second plate for receiving said protrusion;

providing first and second raised portions on a same face side of respective said end portions of said first and second plates such that when said end portions are abutted, said first and second raised portions are aligned, wherein said recess is formed so as to extend into at least a part of said second raised portion and wherein said protrusion is formed so as to extend across at least a part of said first raised portion;

when the abutting is carried out, inserting said protrusion into said recess; and

friction stir welding said abutted end portions using a rotary tool by positioning substantially an axial center of said rotary tool in a position of a half depth of the depth of said recessed portion of said second plate.

17. A frame member for use in friction stir welding, wherein the frame member comprises:

an end portion of one plate, constituting a part of said frame member upon which a friction stir welding may be carried out, having a raised portion which projects in a

AUS PATENT OFFICE

thickness direction of said one plate; and

in said end portion of said one plate, a recess is provided in an end face in a perpendicular direction to said thickness direction of said one plate; wherein

said recess is formed so as to extend into at least a part of said raised portion of said one plate.

18. A frame member for use in friction stir welding, wherein the frame member comprises:

an end portion of one plate, constituting a part of a frame member upon which a friction stir welding may be carried out, having a raised portion which projects in a thickness direction of said one plate; and

in said end portion of said one plate and in an end face of a perpendicular direction to said thickness direction of said one plate, a protrusion is provided which projects in said perpendicular direction; wherein

said protrusion is formed so as to extend across at least a part of said raised portion of said one plate.

19. A frame member for use in friction stir welding, wherein the frame member comprises:

a first face plate;

a second face plate which is arranged substantially parallel to said first face plate and has a projected end portion which projects beyond an end portion of said first plate; and

a rib for connecting said first face plate and said second face plate; wherein

said projected end portion of said second face plate is a portion upon which a friction stir welding may be carried out and said end portion of said second plate has a raised portion which projects from one face side in a thickness direction of said second face plate;

in said end portion of said second face plate, a recess is provided in an end face in a perpendicular direction to said thickness direction of said second face plate; and

said recess is formed so as to extend into at least a part of said raised portion of said

AUSTRALIAN PATENT OFFICE

second face plate.

20. A frame member for use in friction stir welding, wherein the frame member comprises:

a first face plate;

a second face plate arranged substantially parallel to said first face plate and having a projected end portion which projects beyond an end portion of said first face plate; and

a rib for connecting said first face plate and said second face plate; wherein

said projected portion of said second face plate is a portion upon which a friction stir welding may be carried out and said end portion of said second face plate has a raised portion which projects from one face side in a thickness direction of said second face plate;

in said end portion of said second face plate, a protrusion is provided in an end face in a perpendicular direction to said thickness direction of said second face plate; and

said protrusion is formed so as to extend across at least a part of said raised portion.

21. A friction stir welding method substantially as hereinbefore described with reference to Figures 1 to 6.

22. A frame member for use in friction stir welding substantially as hereinbefore described with reference to Figures 1 to 6.

23. A method of manufacturing a structural body substantially as hereinbefore described with reference to Figures 1 to 6.

DATED this 19th day of November, 2002

HITACHI, LTD.

by DAVIES COLLISON CAVE
Patent Attorneys for the Applicant

AUSTRALIAN PATENT OFFICE

FIG. 1

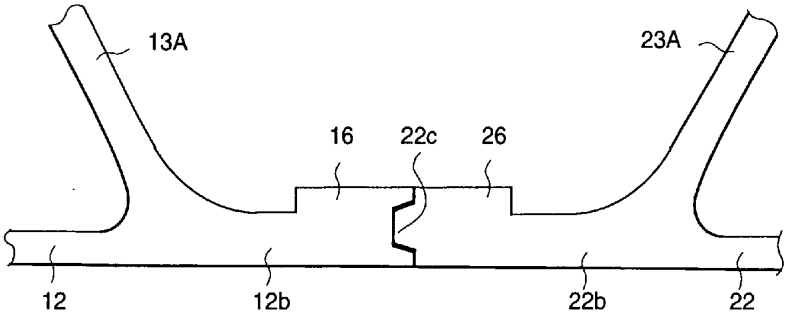
13A
23A
16
22c
26
12
12b
22b
22

FIG. 2

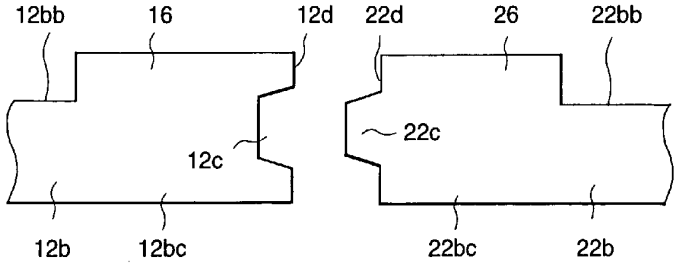
12bb
16
12d
22d
26
22bb
22c
12c
12b
12bc
22bc
22b

FIG. 3

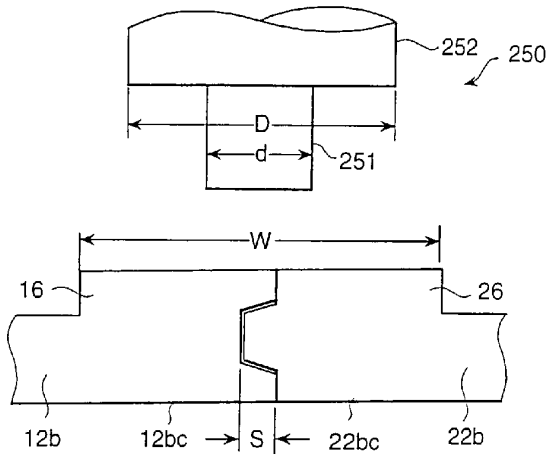
252
250
D
d
251
W
16
26
12b
12bc
S
22bc
22b

FIG. 4

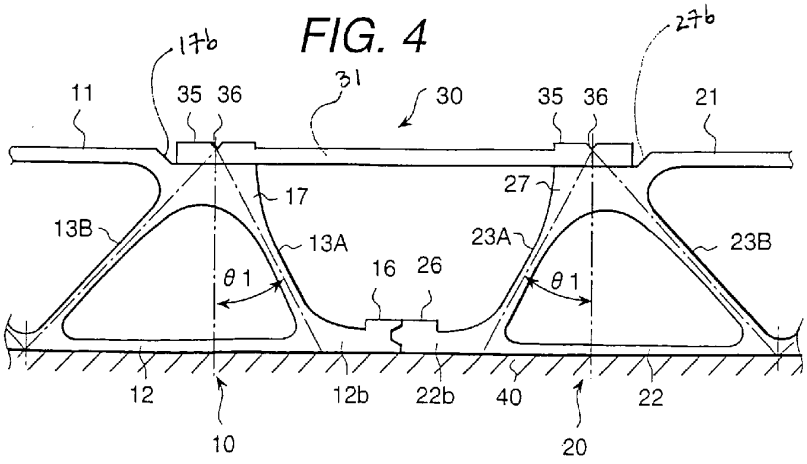
176
276
11
35
36
31
30
35
36
21
17
27
13B
13A
23A
23B
θ1
θ1
16
26
12
12b
22b
40
22
10
20

FIG. 5

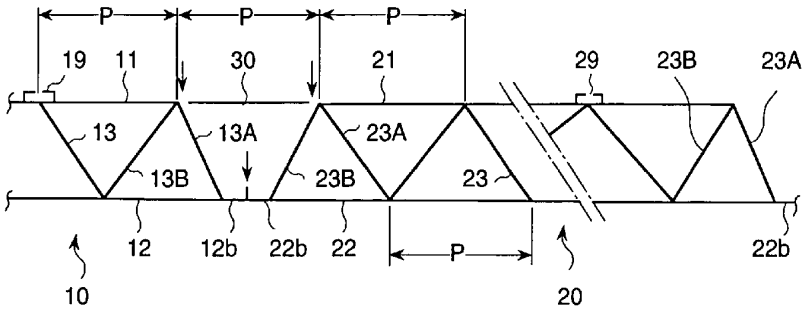

FIG. 6

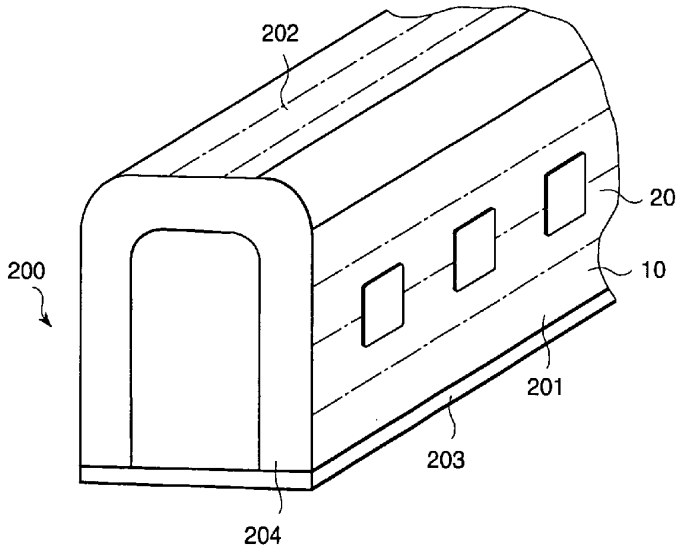

FIG. 7

