March 31, 1931. G. A. BUSH 1,798,521

MUSICAL APPARATUS

Filed Jan. 21, 1928 2 Sheets-Sheet 1

Fig.1.

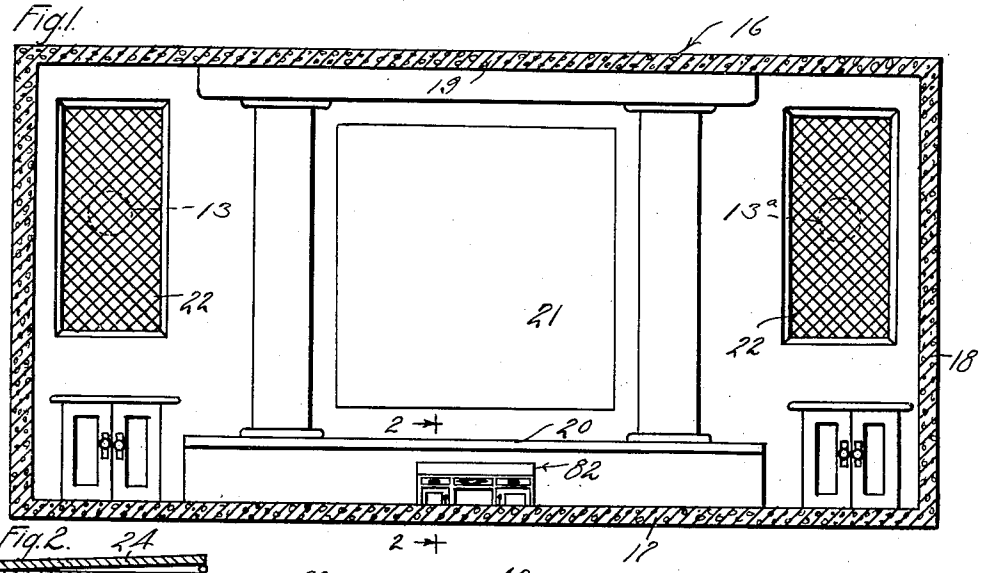

Fig.2.

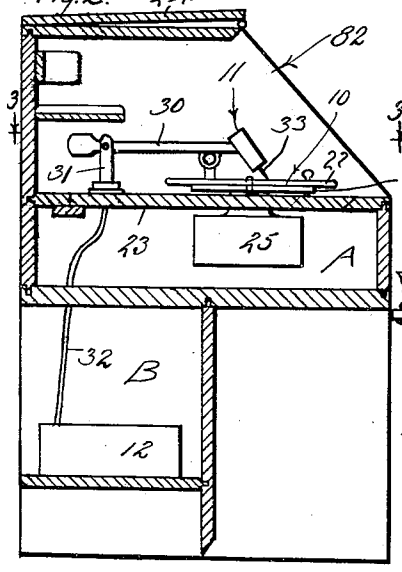

Fig.4.

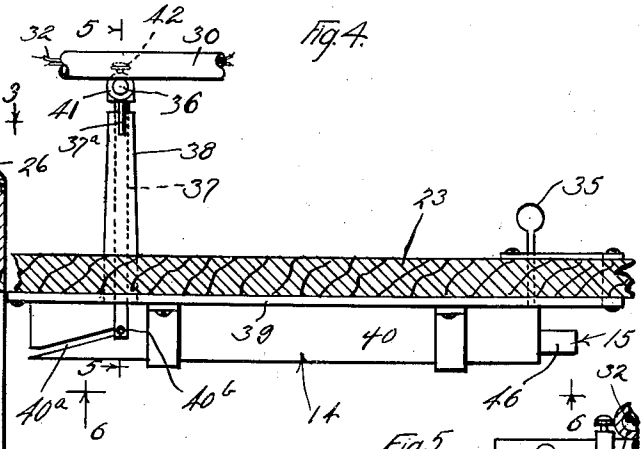

Fig.5.

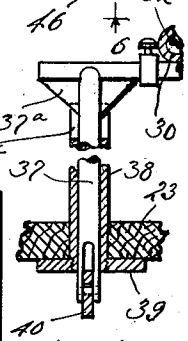

Fig.3.

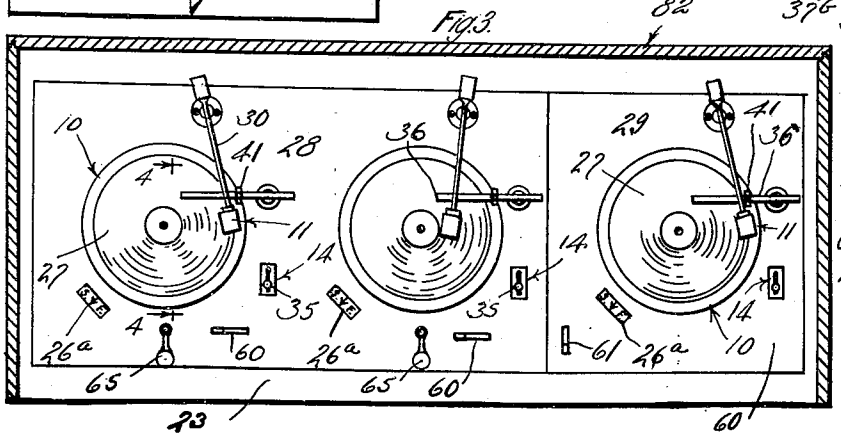

Inventor
Grant A. Bush
by
his Attorney

March 31, 1931. G. A. BUSH 1,798,521

MUSICAL APPARATUS

Filed Jan. 21, 1928 2 Sheets-Sheet 2

Fig. 6.

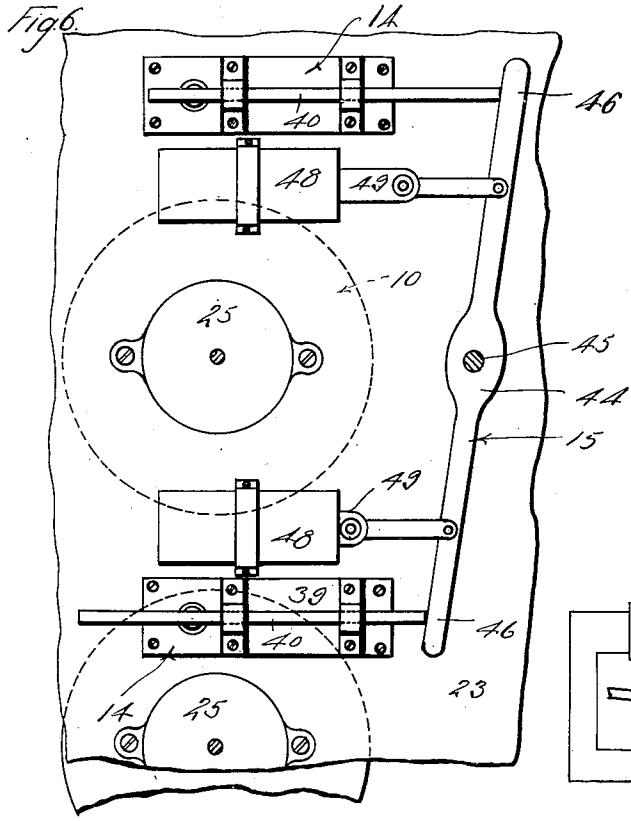

Fig. 7.

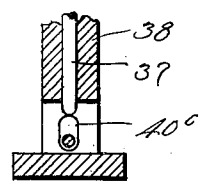

Fig. 8.

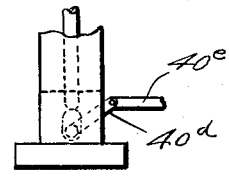

Fig. 10.

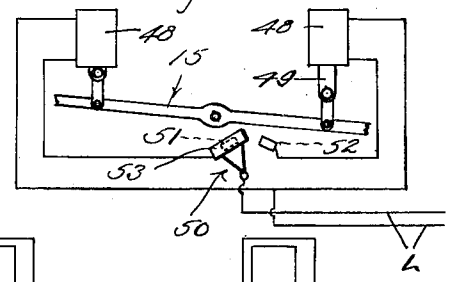

Fig. 9.

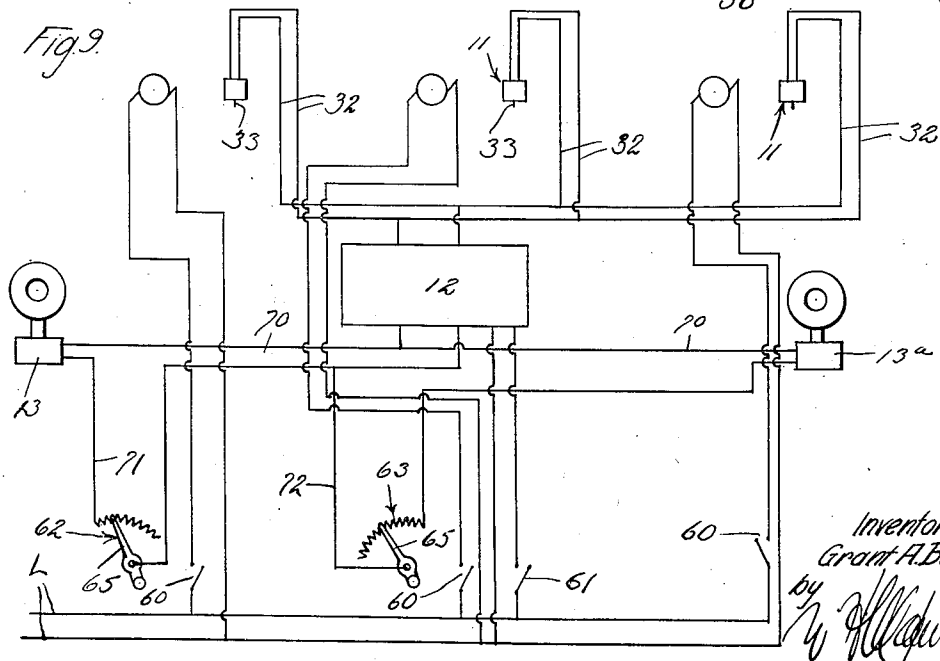

Inventor
Grant A. Bush
by
his Attorney

Patented Mar. 31, 1931

1,798,521

UNITED STATES PATENT OFFICE

GRANT A. BUSH, OF SAN DIEGO, CALIFORNIA

MUSICAL APPARATUS

Application filed January 21, 1928. Serial No. 248,344.

This invention has to do with a musical apparatus and has particular reference to apparatus for use in theaters, and the like.

Theater operators almost invariably provide for musical entertainment together with the main feature of the performance, for instance, together with a motion picture play, or the like. At present, the musical entertainment is usually provided by an orchestra or organ and is an expensive item in the operation of a theater. Attempts have been made to substitute phonograph music for the usual orchestra or organ; however, these attempts have failed to meet the approval of the public, mainly because the music thus provided has been interrupted and it has not been possible to properly adapt the music to the performance. Further, in the attempts that have been made using phonographs, the installations have been such that the audience was fully aware of the fact that the music was phonograph music and such knowledge naturally detracted from the effectiveness of the production.

It is a primary object of this invention to provide means for providing phonograph music for a theater so that the music properly and effectively accompanies the main entertainment.

It is another object of this invention to provide means whereby a continuous uninterrupted program of music may be given by means of phonograph reproduction.

It is another object of this invention to provide apparatus of the character mentioned whereby several different types or strains of music may be cut in and out of operation at will and without breaks or interruptions such as would operate to detract from the harmony or smoothness of the performance.

It is a further object of this invention to provide musical apparatus of the character described in a theater so that the phonograph music is rendered in the same effective manner that organ music is ordinarily rendered.

The various objects and features of the invention will be best and more fully understood from the following description of typical forms and applications of the invention, throughout which description reference is had to the accompanying drawings, in which:

Fig. 1 is a sectional view of a typical theater construction embodying the present invention;

Fig. 2 is a sectional view of a part of the apparatus provided by my invention, being an enlarged view taken as indicated by line 2—2 on Fig. 1;

Fig. 3 is a plan section of the parts shown in Fig. 2, being a view taken as indicated by line 3—3 on Fig. 2;

Fig. 4 is an enlarged, sectional view taken substantially as indicated by line 4—4 on Fig. 3;

Fig. 5 is a detailed, sectional view, being a view taken as indicated by line 5—5 on Fig. 4;

Fig. 6 is a bottom plan view of the parts shown in Fig. 4, being a view taken as indicated by line 6—6 on Fig. 4;

Figs. 7 and 8 are detailed views showing a modified form of construction;

Fig. 9 is a diagram illustrating the electrical system provided by my invention; and

Fig. 10 is a diagram illustrating an electrical system that may be used in carrying out the invention.

My invention is intended primarily for application to or use in a theater, or the like, and provides, generally, a plurality of record operating mechanisms 10, electrical pick-up mechanisms 11 for co-operation with the records operated by the mechanisms 10, an electrical converting and amplifying apparatus 12 for receiving currents from the pick-up mechanisms and converting them to currents suitable for operating a loud speaker unit, one or more loud speaker units 13 and 13*a* connected with the apparatus 12 and located to direct sound into the theater, individual control mechanisms 14 for operating the pick-up units 11 into and out of co-operative engagement with the records, means 15 interconnecting the mechanisms 14 whereby they are co-operatively related, and various other features and elements such as controls and interconnections, the details of which will be hereinafter described.

For the purpose of setting forth my inven-

tion, I have illustrated a typical theater construction 16 including a floor 17, side walls 18, ceiling 19, a stage 20, a projection screen 21 at the stage, and various other features of construction common to theaters. Practically all theaters are provided at opposite sides of the stage with sound chambers 22 for carrying organ pipes or are constructed so that such sound chambers can be readily provided.

In accordance with my invention, the various parts of the musical apparatus, except the loud speaker units 13 and 13*a*, are located in a cabinet 82 that may be placed in the orchestra pit of the theater or at any other desired point. In accordance with my invention, the loud speaker units 13 and 13*a* are located in the sound chambers 22 at opposite sides of the stage and with the ordinary theater construction, the sound chambers are such as to conceal the speaker units and at the same time direct the sound therefrom into the theater.

The cabinet 82 may be of any desired construction; for instance, it may include an instrument board 23 at which are located the various parts of the apparatus requiring attention or manual manipulation. In the cabinet construction shown in the drawings, the instrument board 23 is embodied in the cabinet so that it is accessible only when the front cover 24 of the cabinet is open, as shown in Fig. 3. A compartment A is formed immediately below the instrument board 23 to carry parts of the apparatus, and a compartment B is provided below and at the rear of the compartment A to carry other parts of the apparatus. It is to be understood, of course, that any suitable features of construction may be embodied in the cabinet 82 without departing from the spirit of this invention.

In the preferred embodiment of the invention, there are three record operating mechanisms 10. These mechanisms are located at the instrument board and each includes a motor 25, a turn table 26, and a speed control means 26*a*. In the preferred embodiment of the invention, the motors 25 are electric motors and are located at the under side of the instrument board 23. The turn tables 26 are located at the upper side of the instrument board and are suitably spaced along the board to receive phonograph records 27.

The control means 26*a* of each record operating mechanism has an operating part located at the instrument board whereby the operation of the motor can be conveniently regulated. In the preferred application of my invention, I provide three record operating mechanisms. Two of these mechanisms are mounted on a single movable panel 28 of the instrument board while the third is mounted on a separate movable panel 29 of the instrument board. The panels 28 and 29 are arranged so that they can be lifted or swung upwardly to provide access to the motors 25 or other parts that may be located at the under side of the instrument board or in the compartment A.

The electric pick-up unit 11 in connection with each record operating mechanism 10 may be of any suitable construction and may be carried on an arm 30 pivotally connected to a vertical rotatable post 31. The horizontal pivotal connection between the arm 30 and post 31 allows the arm to lift vertically to move the unit 11 into and out of engagement with the record 27, while the post 31 operates to allow the arm to travel horizontally across the record. The arm 30 and post 31 are preferably tubular so that the wires from the unit 11 can be arranged through them.

The wires 32 from the units 11 extend to the amplifying apparatus 12, which operates to receive the current mechanically varied or modulated by co-operation of the needle 33 with the record 27 and to adapt and amplify such current for operating a loud speaker. The apparatus 12 may embody any suitable electric amplifying circuit such as an amplifying circuit employed in radio receiving apparatus, or the like. My invention is not concerned with the details of construction of the apparatus 12, and therefore, such apparatus is merely diagrammatically illustrated in the drawings.

There is a control mechanism 14 in connection with each pick-up unit 11 and its mounting arm 30 whereby the unit can be lifted and lowered with reference to the record 27 through a simple manipulation of a handle 35. My invention provides a lift bar 36 extending horizontally under the arm 30, a stem 37 whereby said lift bar is supported to be movable vertically, and means whereby the stem and lift bar are operated vertically from the handle 35. In the construction shown, the stem is carried in a vertical guide 38 supported on a base plate 39 applied to the instrument board of the cabinet. The lift bar is braced from the stem by a rib 37*a* and the rib slides in a slot 37*b* in the guide 38 to prevent rotation of the stem in the guide. In the form of the invention illustrated in Figs. 3, 4 and 5 of the drawings, the operating connection between the handle 35 and stem 37 is through a member 40 connected to the handle 35 and having a cam slot 40*a* holding a pin 40*b* carried by the lower end of the stem. The member 40 is preferably below the instrument board. By movement of the handle 35, the member 40 is operated under the stem, causing vertical movement of the stem and the bar 36 carried by the stem. A stop collar 41 may be slidably mounted on each bar. Each collar is provided with a set screw 42 whereby it can be set at any desired position on the bar. The collar may be set on the bar so that the unit carrying arm 30 can be

returned to a definite predetermined position over the record whenever desired.

In Figs. 7 and 8, I show another form of mechanism wherein the stem 37 is adapted to be operated by a cam 40*c*. In this case, the cam is adapted to be operated from a crank arm 40*d* connected with the handle 35 through a connecting rod 40*e*.

The interconnecting means 15 provided by my invention connects between the operating mechanisms 14 of the two units carried by the single movable panel 28. In accordance with my invention, the inter-connecting means is arranged so that one of the pick-up units 11 on said panel is lifted from its record immediately after the other unit is lowered onto its record. In the preferred arrangement, the means 15 is such as to allow both units controlled by it to be moved out of record engagement. The means 15 illustrated in the drawings includes a lever 44 having a central pivotal mounting 45. The lever is mounted on the lower side of the panel. The ends 46 of the lever are positioned to engage the ends of the members 40 so that the members can be simultaneously positioned so that the pick-up units are out of operation but can only be successively positioned so that the units are in operation. The arrangement of the lever 44 and its mode of operation will be apparent from Fig. 6 of the drawings.

If desired, I may provide electromagnetic means for actuating the means 15 and/or the mechanism 14 on the panel 28; for instance, I may provide an operating coil 48 for each of said units. In the drawings, I have shown the operating coils 48 on the underside of the panel 28 and have shown each coil arranged to operate a core 49 connected with one end of the lever 44. In Fig. 10, I show a control circuit which may be provided with this electric operating means. In this circuit, the coils 48 may be connected with a power line L through a switch 50 having stationary contacts 51 and 52, each connected with a coil 48, and a movable contact 53 operable into engagement with either of the contacts 51 or 52 or with both of the contacts 51 and 52. Through this switch 50, either coil 48 can be energized or both coils 48 can be energized. When both coils are energized, the means 15 assumes a neutral position and thus operates the two mechanisms 14 to a neutral position where both of the pick-up units are out of record engagement.

My invention provides control means and interconnections between the various parts above described whereby either or both of the loud speakers can be operated when one of the pick-up units on the panel 28 is in operation. The single unit on the panel 29 can be controlled to operate either loud speaker unit and each speaker is provided with a volume control. In the preferred installation, the entire apparatus is operated from a power line L and each motor 25 is independently connected with the power line L through a switch 60. The switches 60 are preferably located at the instrument board so that an operator has convenient control of the individual motors. The amplifying apparatus 12 is preferably partially, if not wholly, energized from the line L through a switch 61 likewise located at the instrument board. The wires 32 from the pick-up units 11 extend to the amplifying apparatus 12, as clearly shown in the diagram, Fig. 9. The circuit from the apparatus 12 to the speakers is through controls such as rheostats 62, 63. The control levers 65 of the rheostats are located at the instrument board. A line 70 connects one side of the circuit from the apparatus 12 directly with each speaker unit. A line 71 connects the other side of the circuit from the apparatus 12 with the speaker unit 13 through the rheostat 62, while a line 72 connects the said other side of the circuit from the apparatus 12 with the speaker unit 13*a* through the rheostat 63. With this arrangement, the output of the apparatus 12, can by opening the rheostat 63 and operating the rheostat 62, be put entirely through the speaker unit 13, can, by opening the rheostat 62 and operating the rheostat 63, be put entirely through the speaker unit 13*a*, or can, by operating both rheostats 62 and 63, be put through both speaker units 13 and 13*a* in any desired proportion. This arrangement of rheostat controls provides for full selectivity and volume control allowing an operator to operate either speaker unit or both speaker units and to obtain any desired volume from either speaker unit.

In operating the apparatus, records of appropriate music can be placed on the several record tables 26 and the motors 25 and the unit 12 put in operation by closing the switches 60 and 61. When thus starting operation, all of the pick-up units 11 may be out of record engagement. In practice, a record carrying a particular theme is preferably placed on the table at panel 29, while records carrying special selections are placed on the tables at panel 28. The theme record is ordinarily repeated many times during the performance and, therefore, the stop collar 41 is set to control the pick-up for this record so that the operator can start operation of the record at a predetermined point. For instance, each time that the theme is desired, the pick-up operating on the theme record may be started from the same point on the record. During operation, the theme record can be played together with or at the same time as either of the other two records, or, through operation of the controls, it can be played separately. The two records on the units at the panel 28 may be selectively operated through the control mechanisms 14, it being apparent that one record and its co-

operating pick-up can be cut out of operation and the other record and its co-operating pick-up put into operation at any desired time or at any desired part of the records. It is to be understood that the records are preferably operated continuously so that the movement of the pick-up units into and out of engagement with them starts and stops the music without interruption. Further, the mechanisms 14 are such as to move the pick-up units in a truly vertical direction, thus assuring smooth operation of the needles with reference to the records so that the records are not scratched and so that the reproduction from the records through the apparatus 12 is smooth and without undesirable or disagreeable noises. The individual speed controls for the turn tables allow the operator to operate the various records at different speeds as the circumstances require.

From the foregoing description of the volume controls, it will be apparent that individual or joint operation of the loud speaker units can be obtained at any time and that the speakers can be operated under any desired volume. The fact that the speaker units are located at spaced points in the theater in the two sound chambers 22 allows the operator to control the apparatus in a manner to obtain results analogous to those obtained through a theater organ.

Having described only a typical preferred form of my invention I do not wish to limit myself to the specific details set forth, but wish to reserve to myself any changes or variations that may appear to those skilled in the art or fall within the scope of the following claims:

Having described my invention, I claim:

1. Sound reproducing apparatus of the character described including a plurality of record operating mechanisms, a pick-up device for cooperation with each record, a control mechanism in connection with each pick-up device for operating it vertically into and out of engagement with the record including a member slidably carrying each pick-up device for horizontal movement and operable vertically, and an interconnection between the control mechanisms whereby one pick-up device is lowered as the other is raised, the interconnection having a neutral position in which the pick-up devices are both free of the records.

2. Sound reproducing apparatus of the character described including a plurality of record operating mechanisms, a pick-up device for each record, an arm carrying each pick-up device, and a control mechanism in connection with each pick-up, each control mechanism including a bar extending horizontally under the arm slidably carrying the arm for horizontal movement and means for operating the bar vertically.

3. Sound reproducing apparatus of the character described including a plurality of record operating mechanisms, a pick-up device for each record, an arm carrying each pick-up device, and a control mechanism in connection with each pick-up, each control mechanism including a bar extending horizontally under the arm slidably carrying the arm for horizontal movement and means for operating the bar vertically, the said means including a handle for manual operation.

4. Sound reproducing apparatus of the character described including a plurality of record operating mechanisms, a pick-up device for each record, an arm carrying each pick-up device, and a control mechanism in connection with each pick-up, each control mechanism including a bar extending horizontally under the arm carrying the pick-up and means for operating the bar vertically, the said means including a handle for manual operation and electro-magnetic means for electric operation.

5. Sound reproducing apparatus of the character described including a plurality of record operating mechanisms, a pick-up device for cooperation with each record, a control mechanism in connection with each pick-up device for operating it vertically into and out of engagement with the record including a bar extending horizontally under the arm slidably carrying the arm for horizontal movement, and an interconnection between the control mechanisms whereby one pick-up device is lowered as the other is raised, said interconnection including a pivoted lever.

6. Sound reproducing apparatus of the character described including three record operating mechanisms, a pick-up device for cooperation with each record, a single control for each pick-up device for operating it both into and out of engagement with its record, and an interconnection between two of the pick-up devices whereby they operate oppositely.

7. Sound reproducing apparatus of the character described including three record operating mechanisms, a pick-up device for co-operation with each record, a single control member for each pick-up device for operating it both into and out of engagement with its record, and an interconnection between two of the control members whereby they operate oppositely, said interconnection having a neutral position in which it holds two pick-up devices both out of operation.

8. Sound reproduction apparatus of the character described including, a plurality of record operating mechanisms, a pick-up device for each record, means for operating the pick-up devices into and out of engagement with the records, said means including a pivoted lever, electro-magnetic means for operating the lever, and manual means for operating the lever.

9. Sound reproduction apparatus of the

character described including, a plurality of record operating mechanisms, a pick-up device for each record, and means for operating the pick-up devices vertically into and out of engagement with the records, said means including a lever, a bar for engaging the pick-up device, cam means between the lever and bar, electro-magnetic means for operating the lever, and manual means for actuating the lever.

10. Sound reproduction apparatus of the character described including, a plurality of record operating mechanisms, a pick-up device for each record, means for operating the pick-up devices vertically into and out of engagement with the records, said means including a lever, a bar operable by the lever, a vertically movable member, a part on said member cooperating with a cam part of the bar, and means for actuating the lever.

11. Sound reproducing apparatus of the character described including, a plurality of record operating mechanisms, a pick-up device for each record, an arm carrying each pick-up device, a control mechanism in connection with each pick-up device for operating it vertically into and out of engagement with the record including a bar extending horizontally under each arm carrying the arm for vertical movement, and slidably carrying the arm for horizontal movement, and means interconnecting two of the bars whereby one bar is raised as the other bar is lowered.

12. Sound reproducing apparatus of the character described including a plurality of record operating mechanisms, a pick-up device for cooperation with each record, a control mechanism in connection with each pick-up device for operating it vertically into and out of engagement with the record including a bar extending horizontally under the arm slidably carrying the arm for horizontal movement, and an interconnection between the control mechanisms whereby one pick-up device is lowered as the other is raised, said interconnection including a pivoted lever and electro-magnetic means for operating the lever.

In witness that I claim the foregoing I have hereunto subscribed my name this 31st day of December, 1927.

GRANT A. BUSH.