A. O. BOYLAND.

CLASP.

APPLICATION FILED JUNE 11, 1910.

1,069,225. Patented Aug. 5, 1913.

Fig. 1.

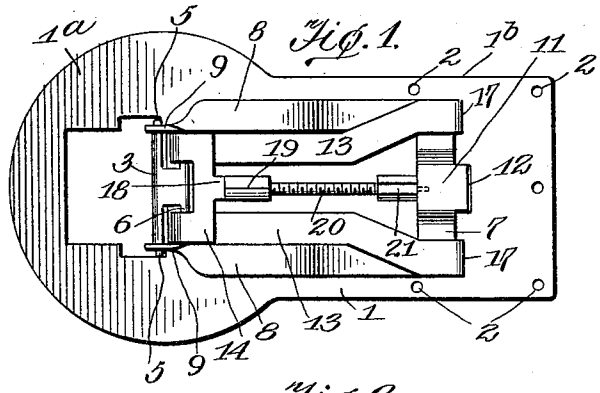

Fig. 2.

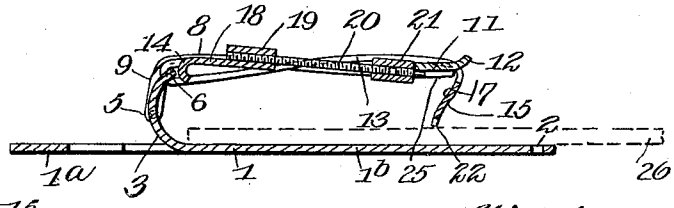

Fig. 3.

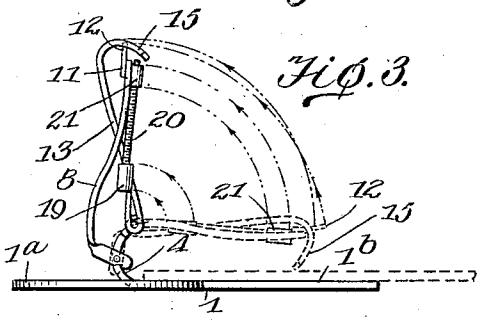

Fig. 4.

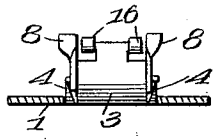

Fig. 6.

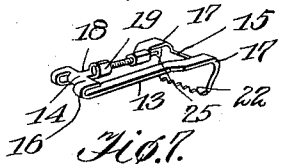

Fig. 5.

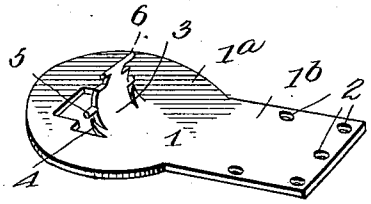

Fig. 7.

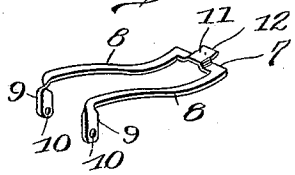

WITNESSES:

Samuel E. Wade

C. E. Tranier

INVENTOR

ALVAH O. BOYLAND

BY Munn & Co.

ATTORNEYS

UNITED STATES PATENT OFFICE.

ALVAH O. BOYLAND, OF ANACONDA, MONTANA.

CLASP.

1,069,225. Specification of Letters Patent. Patented Aug. 5, 1913.

Application filed June 11, 1910. Serial No. 566,290.

To all whom it may concern:

Be it known that I, ALVAH O. BOYLAND, a citizen of the United States, and a resident of Anaconda, in the county of Deerlodge and State of Montana, have invented certain new and useful Improvements in Clasps, of which the following is a specification.

My invention is an improvement in clasps, and consists in certain novel constructions, and combinations of parts, hereinafter described and claimed.

The object of the invention is to provide a simple and inexpensive clasp suitable for use, whenever it is desired to firmly hold two flat elements together, and which may be adjusted in accordance with the thickness of the substances to be grasped.

Referring to the drawings forming a part hereof, Figure 1 is a plan view of the improvement, Fig. 2 is a longitudinal section, with the clasp closed, Fig. 3 is a similar view with the clasp open, Fig. 4 is a transverse section, Fig. 5 is a perspective view of the base, Fig. 6 is a similar view of the catch, and Fig. 7 is a similar view of the adjusting means.

The embodiment of the invention as shown in the drawings, consists of a base plate 1, which may be of any desired shape or size, in accordance with the use to be made of the clasp, the plate shown comprising a substantially circular portion 1^a, having at one side a substantially rectangular lug or extension 1^b, which is provided with a plurality of openings 2, through which stitches may be passed to secure the plate in place.

At approximately the center of the circular portion 1^a, the plate is provided with a struck up lug 3, and at each side of the lug with a struck up tooth 4. The lug is provided on each side edge with a laterally extending journal pin 5, the pins being in alinement, and at its upper end is cut away to form other laterally extending journal pins 6, one at each side of the lug and in alinement, and extending approximately flush with the adjacent side edge.

A yoke comprising a body portion 7 and arms 8 is pivoted to the lugs 5, each of the arms 8 being given a quarter turn near its end and bent laterally at right angles, as at 9 and provided with a transverse opening 10, in which is received one of the journal pins 5. The body portion of the yoke is provided at its center with an upwardly offset portion 11, and with a longitudinally extending finger piece 12.

A frame comprising a pair of substantially parallel bars 13 connected at their ends by cross bars 14 and 15 is journaled on the lug 6. The bars 13 adjacent to the cross bar 14, are bent over upon themselves in one direction to form bearings 16, and at the other end are bent over upon themselves in the opposite direction as at 17, in such manner that the cross bar 14 overlies the bars 13, but is spaced apart thereupon, and the bar 15 extends toward the base 1.

A sleeve 21 polygonal in cross section bears at one end against the cross bar 15, and a threaded rod 20 has one of its ends threaded into the other end of the sleeve. The opposite end of the rod is rotatable in the bearing sleeve 19 on the end of the cross bar 14, before mentioned. The free edge of the cross bar 15 is serrated as shown at 22. The frame is connected with the lug 3 by means of laterally extending journal pins 6 on the lug, the said pins being journaled in bearings 16 formed on the frame by bending over the arms. The nut 21 forms a locking device for locking the clasp in closed position. When the rod 20 is depressed to disengage the nut from the cross bar 11, the frame, that is, the movable portion of the clasp, may be moved away from the plate 1 or the fixed portion of the clasp.

The nut 21 is provided with a pin 25 threaded into the opposite end from the rod 20, and the said pin engages beneath the portion 11 of the frame formed by the arms 8 and cross piece, and the nut 21 bears against the inner edge of the said cross bar. By turning the nut 21 to move it toward or from the sleeve 19, the distance between the serrated edge of the cross bar 15 and the face of the base 1 may be regulated in accordance with the thickness of the material 26 grasped.

In operation, the plate is secured to one of the parts to be held, by means of stitches or the like passing through the openings 2, when it is desired to attach the clasp to a garment or fabric. The two portions or ends of the article to be held, as for instance a belt, may if desired be merely clasped and held together by the clasp. By turning the sleeve 21 in the proper direction, the serrated edge 22 of the cross bar 15 may be brought nearer to or farther away from the

plate 1, in order to provide for varying thicknesses to be grasped by the clasp. When the parts are in the position shown in Fig. 3, that is with the clasp open, the sleeve 21 is below the cross bar 11, and the movable portion of the clasp, that is the yoke 7—8 and the frame shown in Fig. 6, is swung toward the plate 1, into the dotted line position of Fig. 3. When the movable parts reach this position and grasp the material to be held, the sleeve 21 slips upwardly and bears against the inner edge of the cross bar 11, thus locking the movable parts in closed position. To release the clasp, the sleeve 21 is depressed, until it is below and out of contact with the cross bar 11. The parts are now free to swing upwardly into the full line position of Fig. 3.

It will be evident that the invention comprises in its simplest form a pair of gripping jaws hinged together at one end, and a longitudinally curved resilient tension frame arranged between the free end of one jaw and the hinged connection, means for adjusting or varying the tension of the frame, and locking means to hold the jaws open or closed.

It will be evident that when the sleeve 21 is turned, the angle of the cross bar 15 with respect to the plate 1 is varied. The said plate is inclined with respect to the bar, and it is obvious that the more near perpendicular the said bar is to the plate, the nearer the edge 22 of the bar will be to the plate. The lugs 4 on the plate prevent lateral movement of the yoke arms away from the lug 3.

I claim.

1. A clasp comprising a base having at one end thereof means whereby it may be attached to a support, and having at the other end a struck up lug, said lug being provided at each side with a trunnion, the trunnions being in alinement, and the base having a struck up tooth adjacent to each of the trunnions, a substantially U-shaped frame having the ends of its arms bent at an angle toward the base and pivoted on the trunnions, the teeth engaging the outer faces of the arms to prevent their disengagement from the trunnions, the cross bar of the said frame having a finger piece and a longitudinal groove, the said lug being cut away near the free end thereof to form a pair of oppositely extending trunnions whose outer ends are flush with the sides of the lug, a substantially rectangular frame pivoted at one end on the last-named trunnions, the opposite end of the frame being serrated and bent at an angle to the frame over the cross bar of the first frame toward the base for coöperating therewith to grip an article therebetween, the pivoted end of the last named frame having a sleeve at the center thereof, a threaded rod journaled in the sleeve and projecting toward the serrated end, and a nut threaded on to the rod having a pin projecting in the opposite direction from the rod and engaging the transverse groove in the body portion of the said frame said nut engaging the cross bar of the frame to prevent opening movement of the said frame away from the base.

2. A clasp comprising a base having at one end a struck up lug provided at each end with a laterally extending trunnion, and with a tooth adjacent to each trunnion, a substantially U-shaped frame having the ends of its arms bent laterally toward the base and journaled on the trunnions, the teeth engaging the outer faces of the arms to prevent disengagement thereof, the body portion of the frame having a transverse groove and a finger piece adjacent to the groove, the lug on the base being cut away near its free end to form oppositely extending trunnions, a substantially rectangular frame pivoted at one end on the last named trunnions, the opposite end of the frame being bent laterally over the cross bar of the first-named frame toward the base and serrated to coöperate with the base for grasping an article therebetween, a sleeve on the pivoted end of the frame, a threaded rod journaled in the sleeve and extending toward the body portion of the first-named frame, and a nut on the rod engaging the edge of the cross bar for the purpose specified.

3. A clasp comprising a base having at one end a lug provided at each side with a laterally extending trunnion, a substantially U-shaped frame having the ends of its arms bent laterally toward the base and pivoted to the trunnions, means on the base for preventing lateral movements of the arms away from the lug, the cross-bar of the frame having a finger piece, said lug having its upper end cut away to form a pair of trunnions offset inwardly from the first-named trunnions, a substantially rectangular frame pivoted at one end on the last-named trunnions, a sleeve at approximately the center of the said end, the opposite end of the frame being bent laterally over the cross bar of the first frame toward the base and serrated for coöperating therewith to form a pair of gripping jaws, a threaded rod journaled in the sleeve and extending toward the serrated end, and a nut on the rod for engaging the cross bar of the first-named frame to prevent opening movement of the frame away from the base.

4. A clasp comprising a base having at one end a lug provided at each side with a laterally extending trunnion, a substantially U-shaped frame having the ends of its arms bent laterally toward the base and pivoted to the trunnions, means on the base for preventing lateral movement of the arms away from the lug, the cross bar of the frame hav-

ing a finger piece, said lug having a second pair of trunnions above the first pair, a substantially rectangular frame pivoted at one end on the last-named trunnions, the opposite end being serrated and bent toward the base to coöperate therewith to form a pair of gripping jaws, a threaded rod journaled on the said rectangular frame at the pivoted end and extending toward the serrated end, and a nut on the rod engaging the cross bar of the first-named frame to lock the jaws in closed position, said rod being movable laterally to permit the nut to be disengaged from the frame, to permit the base and the last-named frame to move away from each other.

5. A clasp comprising a base having at one end a lug, a substantially U-shaped frame having the ends of its arms bent laterally toward the base and pivoted to the lug on each end thereof, means for preventing disengagement of the arms, a substantially rectangular frame pivoted at one end to the lug above the connection of the first frame, the opposite end being serrated and bent laterally toward the base and over the cross bar of the first frame and coöperating with the base to form a pair of gripping jaws, a threaded rod journaled on the last-named frame at approximately the longitudinal center thereof and extending toward the cross bar of the first-named frame, and a nut on the rod engaging the edge of the said cross bar to lock the jaws in closed position, said nut being depressible out of engagement with the said edge to permit the jaws to open.

6. A clasp having at one end a lug, a substantially U-shaped frame having the ends of its arms bent laterally toward the base and pivoted to the lug, a second substantially rectangular frame pivoted at one end to the lug above the connection of the first-named frame, the opposite end of the second frame being bent over the cross bar of the first frame toward the base, and serrated to coöperate with the base to form gripping jaws, a threaded rod journaled on the last-named frame at the connected end, and a nut on the rod engaging the cross body of the first-named frame to lock the jaws in closed position, said nut being depressible out of engagement with the said frame to permit the jaws to open.

7. A clasp comprising a base, a frame having one end bent laterally and hinged to the base, a second frame hinged at one end to the base above the connection of the first frame, the opposite end being serrated and bent over the free end of the first frame toward the base, and means between the hinged end of the last frame and the free end of the first frame and engaging the said ends to prevent the swinging of the free ends of the frames away from the base, the said means being adjustable.

ALVAH O. BOYLAND.

Witnesses:
T. P. STEWART,
ALBERTINE BOWERS.