(12) INTERNATIONAL APPLICATION PUBLISHED UNDER THE PATENT COOPERATION TREATY (PCT)

(19) World Intellectual Property Organization
International Bureau

(43) International Publication Date
27 December 2018 (27.12.2018)

WIPO | PCT

(10) International Publication Number
WO 2018/234435 A1

(51) International Patent Classification:
G01R 33/09 (2006.01) *G01R 33/07* (2006.01)

(21) International Application Number:
PCT/EP2018/066559

(22) International Filing Date:
21 June 2018 (21.06.2018)

(25) Filing Language: English

(26) Publication Language: English

(30) Priority Data:
17305787.8 23 June 2017 (23.06.2017) EP

(71) Applicants: **UNIVERSITE DE MONTPELLIER** [FR/FR]; 163, Rue Auguste Broussonnet, 34090 MONTPELLIER (FR). **CENTRE NATIONAL DE LA RECHERCHE SCIENTIFIQUE** [FR/FR]; 3, rue Michel Ange, 75016 PARIS (FR). **DAEGU GYEONGBUK INSTITUTE OF SCIENCE AND TECHNOLOGY** [KR/KR]; Techno 333 Jungang, Daero, Hyeonpung-myeon, Dlseong-gun, DAEGU 711-873 (KR). **ECOLE NATIONALE SUPERIEURE DE CHIMIE DE MONTPELLIER** [FR/FR]; 240, Avenue du professeur Emile Jeanbrau, 34296 MONTPELLIER CEDEX 5 (FR).

(72) Inventors: **TRAN, Quang-Hung**; 395, Rue Adrien Proby, BAT N6 - APP. 606, 34090 MONTPELLIER (FR). **TERKI, Férial**; 1, Chemin de la Bergerie, 34270 LE TRIADOU (FR). **KAMARA, Souleymane**; 27, Allée de bon accueil, Res le Sorbonne app4, 34090 MONTPELLIER (FR). **FELIX, Gautier**; 29, Place de l'Estérel, 34090 MONTPELLIER (FR). **BOUSSEKSOU, Azzedine**; 8, Rue du Médecin Colonel Calbairac, 31100 TOULOUSE (FR). **KIM, CheolGi**; Kolon Hanuelchae - APT 203 - Wolseong-dong, Dalseo-gu - Daegu - South Korea - COREE DU SUD, DAEGU, 711-873 (KR).

(74) Agent: **TANGUY, Yannick** et al.; Marks & Clerk France, Immeuble VISIUM, 22 avenue Aristide Briand, 94117 ARCUEIL Cedex (FR).

(81) Designated States *(unless otherwise indicated, for every kind of national protection available)*: AE, AG, AL, AM,

(54) Title: MAGNETIC HYBRID AMR/PHR BASED SENSING DEVICE AND METHOD FOR MEASURING A LOCAL MAGNETIC FIELD

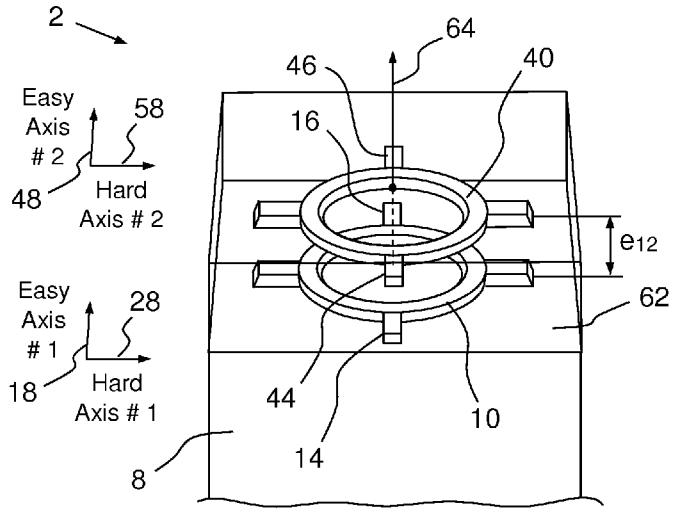

FIG.1C

(57) Abstract: A magnetic hybrid AMR/PHR based sensing device comprises a magnetic field receiver (4) having a magnetic hybrid AMR/PHR sensor and a first magnetic field transmitter (6) having a magneto-resistive or low resistive second track with a closed loop shape or a cross junction shape. The magnetic field receiver (4) and the magnetic field transmitter (6) are superimposed, secured to and separated by a first insulating spacer (62) configured to align respectively the first easy axis (18) and the first hard axis t(28) to the second easy axis (48) and the second hard axis (58), then rotate the said second axis (48, 58) from the said first axis (18, 18) at a predetermined fixed offset angle α, and to maintain this axis arrangement as well as a fixed separation distance e_{-12} between the first track (10) and the second track (40) in a range from few micrometers to few nanometers.

[Continued on next page]

WO 2018/234435 A1

AO, AT, AU, AZ, BA, BB, BG, BH, BN, BR, BW, BY, BZ, CA, CH, CL, CN, CO, CR, CU, CZ, DE, DJ, DK, DM, DO, DZ, EC, EE, EG, ES, FI, GB, GD, GE, GH, GM, GT, HN, HR, HU, ID, IL, IN, IR, IS, JO, JP, KE, KG, KH, KN, KP, KR, KW, KZ, LA, LC, LK, LR, LS, LU, LY, MA, MD, ME, MG, MK, MN, MW, MX, MY, MZ, NA, NG, NI, NO, NZ, OM, PA, PE, PG, PH, PL, PT, QA, RO, RS, RU, RW, SA, SC, SD, SE, SG, SK, SL, SM, ST, SV, SY, TH, TJ, TM, TN, TR, TT, TZ, UA, UG, US, UZ, VC, VN, ZA, ZM, ZW.

(84) Designated States *(unless otherwise indicated, for every kind of regional protection available)*: ARIPO (BW, GH, GM, KE, LR, LS, MW, MZ, NA, RW, SD, SL, ST, SZ, TZ, UG, ZM, ZW), Eurasian (AM, AZ, BY, KG, KZ, RU, TJ, TM), European (AL, AT, BE, BG, CH, CY, CZ, DE, DK, EE, ES, FI, FR, GB, GR, HR, HU, IE, IS, IT, LT, LU, LV, MC, MK, MT, NL, NO, PL, PT, RO, RS, SE, SI, SK, SM, TR), OAPI (BF, BJ, CF, CG, CI, CM, GA, GN, GQ, GW, KM, ML, MR, NE, SN, TD, TG).

Published:

— *with international search report (Art. 21(3))*

MAGNETIC HYBRID AMR/PHR BASED SENSING DEVICE AND METHOD FOR MEASURING A LOCAL MAGNETIC FIELD

TECHNICAL FIELD OF THE INVENTION

The present invention concerns a magnetic measurement device and a system based on an ultrasensitive Planar Hall magneto-resistive sensor for measuring locally a time varying magnetic free field generated remotely by one or several magnetic source(s) or for measuring tiny quantities of magnetic particles deposited closely to the sensor.

The invention also relates to a method using the magnetic measurement device and system according to the invention for measuring locally an alternative magnetic free field or for measuring locally a time varying magnetic free field generated remotely by one or several magnetic source(s) or for measuring tiny quantities of magnetic particles deposited closely to the sensor.

BACKGROUND OF THE INVENTION

Various detection methods with magneto-resistive (MR) sensors have been proposed to detect local magnitude and/or variation of a magnetic field generated remotely or closely by one or several magnetic source(s) as for example magnetic micro- nanobeads.

These methods use different types of MR sensors, such as semiconductor Hall sensor, anisotropic magnetoresistive (AMR), giant magnetoresistive (GMR), tunneling magnetoresistive (TMR) and giant magneto-impedance (GMI) sensors.

These sensors are able to detect small quantities of magnetic particles and/or concentrations of these magnetic particles and described in several papers.

As an alternative to the MR sensors described here above, the use of Planar Hall Magnetoresistive (PHR) sensors has been also proposed in order to detect lower quantities of magnetic particles and such sensors are described in the patent WO 2014/009516 A1.

The Planar Hall Magnetoresistive (PHR) sensors are Anisotropic Magneto Resistance (AMR) coupled with planar Hall effect (PHE) sensors that present a linear dependence as a function of small external field, a very high sensitivity and a high signal-to-noise ratio. These sensors are a growing center of interest in the domain of local magnetic field detection of micro- nano-beads and particularly in the field of magnetic phase transition of bi-stable nano-particles.

However the Hall Magnetoresistive sensors as described in the cited patents still need a relatively high power external biasing field, thus precluding most low power portable battery powered applications.

A first technical problem is to propose a portable magnetic hybrid AMR/PHR sensing device for detecting local magnitude and/or variation of a magnetic field generated remotely or closely by one or several magnetic source(s) wherein the power consumption is decreased while keeping a high sensitivity.

A second technical problem is to propose a portable magnetic hybrid AMR/PHR sensing device for detecting local magnitude and/or variation of a magnetic field generated remotely or closely by one or several magnetic source(s) wherein the power consumption is decreased while keeping a high sensitivity and operating at low temperature ranging from 4°K to 400°K.

A third technical problem is to propose a method for detecting local magnitude and/or variation of a magnetic field generated remotely or closely by one or several magnetic source(s) that uses a portable magnetic hybrid AMR/PHR sensing device with low power consumption while keeping a high measurement sensitivity.

SUMMARY OF THE INVENTION

The invention aims at solving the first, second and third technical problems.

To this end, the invention relates to a magnetic hybrid AMR/PHR based sensing device for detecting local magnitude and/or variation of a magnetic field generated remotely or closely by one or several magnetic source(s), and comprising a magnetic field receiver, as a first component, having a structure of a magnetic hybrid AMR/PHR sensor and that includes a magnetoresistive first track with a closed loop shape or a cross junction shape; a first pair of current terminals formed with a first current terminal and a second current terminal, facing each other, contacting with the magnetoresistive first track and forming a first easy axis; a first pair of voltage terminals formed with a first voltage terminal and a second voltage terminal, facing each other, contacting with the magnetoresistive first track and forming a first hard axis, orthogonal to the first easy axis.

The magnetic hybrid AMR/PHR based sensing device is characterized in that it comprises a first magnetic field transmitter as a second component, configured for being excited by a DC and/or AC supplied bias current or by an external magnetic field to be measured and that includes:

.- a magnetoresistive or low resistive second track with a closed loop shape or a cross junction shape,

.- a second pair of current terminals formed with a third current terminal and a fourth current terminal, facing each other, contacting with the second track and forming a second easy axis,

.- a second pair of voltage terminals formed with a third voltage terminal and a fourth voltage terminal, facing each other, contacting with the second track and forming a second hard axis, orthogonal to the second easy axis.

The magnetic hybrid AMR/PHR based sensing device is also characterized in that the magnetic field receiver and the magnetic field transmitter are superimposed, secured to and separated by a first insulating spacer configured to align respectively the first easy axis and the first hard axis to the second easy axis and the second hard axis, then rotate the said second axis from said first axis at a predetermines fixed offset angle α , and to maintain this axis arrangement as well as a fixed separation distance e_{12} between the first track and the second track in a range from few micrometers to few nanometers.

According to further aspects of the invention which are advantageous but not compulsory, the magnetic measurement system might incorporate one or several of the following features, taken in any technically admissible combination:

.- the first spacer is a rigid structure made of a rigid insulating material having pillars and beams and/ or ribs, having voids filled by an insulating gas or vacuum; or a bulky homogeneous layer made of a rigid insulating material; or a bully layer made of a rigid insulating material and pierced with at least one longitudinal hole(s), directed along a direction included in the extension plane of the layer, to drive magnetic particle(s) and without lateral opening; or a bulky layer made of a rigid insulating material and pierced with at least one longitudinal hole(s), directed along a direction included in the extension plane of the layer, to drive magnetic particle(s), the longitudinal hole(s) having lateral(s) opening connected to secondary longitudinal hole(s) to provide a control access for controlling a magnetic state of the particle(s); or a bulky layer made of a rigid insulating material and pieced perpendicularly to the layer plane with at least one longitudinal hole(s), when the second track of the first transmitter has a central opening;

.- the rigid insulating material of the first spacer is comprised among the dioxide of silicon SiO_2, and/or the thickness e_{12} of the insulating layer of the first spacer is ranging from 1 µm to 5 µm, or from 600 nm to 1 µm, or from 200 nm to 600 nm, or from 50 nm to 200 nm, or from 10 nm to 50 nm, or from 1 nm to 10 nm;

.- the shape of the track of the magnetic field receiver and the shape of the track of the first magnetic field transmitter are shapes comprised in the set of the

closed loop shapes among the shapes of a ring junction, a multi-ring junction, an oval junction, a multi-oval junction, a diamond junction, a multi-diamond junction, a square junction, a multi-square junction, a rectangular junction, a multi-rectangular junction, and the shape of a cross junction;

.- the material of the first track is a magneto-resistive material among the bi-layer structure material, in particular Ta/NiFe/IrMn/Ta, a tri-layer structure material including a ferromagnetic film, a metal and an anti-ferromagnetic film, in particular Ta/NiFe/Cu/IrMn/Ta, and a spin-valve structure material, in particular Ta/NiFe/Cu/NiFe/IrMn/Ta; and the material of the second track is a magneto-resistive material among a bi-layer structure material, in particular Ta/NiFe/IrMn/Ta, a tri-layer structure material including a ferromagnetic film, a metal and an anti-ferromagnetic film, in particular Ta/NiFe/Cu/IrMn/Ta, and a spin-valve structure material, in particular Ta/NiFe/Cu/NiFe/IrMn/Ta, or is a low resistive material among gold, copper and silver metals;

.- the offset angle α formed between the first easy axis of the magnetic field receiver and the second easy axis of the first field transmitter is selected in the range [0 degree, 90 degrees] so that the sensitivity of the sensing device is maximal, and preferably is comprised within the range [15 degrees, 25 degrees];

.- the accuracy of the alignment of the axis before their rotation is below 10 nm, and the accuracy of the set α angle is below 1.0 degree, preferably below 0.02 degree;

.- the magnetic field receiver and the first magnetic field transmitter are identical, or the magnetic field receiver and the first magnetic field transmitter mutually differ by the shape of their electromagnetic track, and/or the material of their electromagnetic track;

.- the magnet hybrid AMR/PHR based sensing device comprises further a second magnetic field transmitter as a third component, configured for being excited by a DC and/or AC supplied bias current or by an external magnetic field to be measured and that includes: a magnetoresistive or low resistive third track with a closed loop shape or a cross junction shape, a third pair of current terminals formed with a fifth current terminal and a sixth current terminal, facing each other, contacting with the third track and forming a third easy axis, a third pair of voltage terminals formed with a fifth voltage terminal and a sixth voltage terminal, facing each other, contacting with the third track and forming a third hard axis, orthogonal to the third easy axis; and the first magnetic field transmitter and the second magnetic field transmitter are identical; and the first magnetic field transmitter, the magnetic field receiver and the second magnetic field transmitter are superimposed and mutually secured through the first spacer and a second spacer

so that the field magnetic receiver is sandwiched between the first field magnetic transmitter and the second field magnetic transmitter;

.- the second insulating spacer is configured to secure the second magnetic field transmitter to the magnetic field receiver on the opposite side of the first insulating spacer, once an alignment of the respective first easy axis and the first hard axis to the respective third easy axis and the third hard axis, followed by a rotation of the said third axis from the said first axis at the predetermined fixed offset angle α, and to maintain this axis arrangement as well as a fixed separation distance e_{13} between the first track and the third track equal to the fixed separation distance e_{12} between the first track and the second track; and the second spacer is a bulky homogeneous layer made of the rigid insulating material as the insulating material of the first spacer;

.- the magnetic hybrid MR/PHR based sensing device comprises further: either a single second track current source for supplying a DC and/or AC current to the second track of the first magnetic field transmitter when the magnetic sensing device comprises the magnetic field receiver and the first magnetic field transmitter as a single magnetic field transmitter; or a second track current source and a third track current source for supplying a DC and/or AC current respectively to the second track of the first magnetic field transmitter and to the third track of the second magnetic field transmitter when the magnetic sensing device comprises the magnetic field receiver and two first and second magnetic field transmitter to operate in a differential mode, the second track current source and the third track current source being configured and connected to the second track of the first magnetic field transmitter and to the third track of the second magnetic field transmitter in order to generate two magnetic fields, symmetric to the plane of the magnetic field receiver and polarized with opposite direction;

.- the magnetic hybrid AMR/PHR based sensing device comprises further an amplifier circuit connected to the first and second voltage terminals for amplifying a measurement signal and/or cancel a offset voltage from the said measurement signal.

The invention also relates to a magnetic measurement method for measuring local magnitude and/or variation of a magnetic field generated remotely or closely by one or several magnetic source(s) according to a first embodiment. The magnetic measuring method comprises the steps of :

- providing a magnetic hybrid AMR/PHR based sensing device comprising a magnetic field receiver and a first magnetic field transmitter as defined here above;
- measuring a differential voltage V_{MR} between the voltage terminals of the first pair by using a voltage measurement device connected between the first and

second voltage terminals, while keeping disconnected the first pair of current terminals of the magnetic field receiver, the first pair of voltage terminals of the magnetic field receiver, and the second pair of current terminals of the first magnetic field transmitter so that the impedance between the first pair of current terminals, the impedance between the first pair of voltage terminals, the impedance between the second pair of current terminals are representative of an open circuit;

- determining a local magnitude and/or variation of a time varying magnetic field generated remotely or closely by one or several magnetic source(s) on the basis of the measured differential voltage.

According to a second embodiment, the invention also relates to a magnetic measurement method for measuring local amplitude and/or variation of a magnetic field generated by one or several magnetic source(s). The magnetic measuring method comprises the steps of :

- providing a magnetic hybrid AMR/PHR based sensing device comprising a magnetic field receiver and a first magnetic field transmitter as defined here above,
- injecting a bias DC and/or AC current in the second magnetic track of the first magnetic field transmitter by using an electrical bias current source connected between the third and fourth current terminals of the first magnetic field transmitter, and
- driving a set of one or several magnetic particles sensitive to a magnetic field in the vicinity or in contact of an active area of the magnetic receiver located under the magnetic track of the first magnetic field transmitter; then
- measuring a differential voltage V_{MR} between the first and second voltage terminals of the magnetic field receiver by using a voltage measurement device connected between the first and second voltage terminals, while keeping disconnected the first pair of current terminals of the magnetic field receiver and the second pair of voltage terminals of the first magnetic field transmitter so that the impedance between the first pair of current terminals, and the impedance between the second pair of voltage terminals are representative of an open circuit;
- determining a local magnitude and/or variation of a time varying magnetic field generated closely by the magnetic particles on the basis of the measured differential voltage.

According to a third embodiment, the invention also relates to a magnetic measurement method for measuring local amplitude and/or variation of a magnetic field generated by one or several magnetic source(s). The magnetic measuring method comprising the steps of:

- providing a magnetic hybrid AMR/PHR based sensing device comprising a magnetic field receiver, a first magnetic field transmitter and a second magnetic field transmitter as defined here above,
- injecting a bias DC and/or AC current in the second magnetic track of the first magnetic field transmitter and the third magnetic track of the second magnetic field transmitter by using an electrical bias current source connected between the third and fourth current terminals of the first magnetic field transmitter and between the fifth and the sixth current terminals of the second magnetic field transmitter so that the excitation magnetic fields generated by the first magnetic field transmitter and the second magnetic field transmitter are polarized on opposite direction, and
- driving a set of one or several magnetic particles sensitive to a magnetic field in the vicinity or in contact of an active area of the magnetic receiver located under the magnetic track of the first magnetic field transmitter; then
- measuring a differential voltage V_{MR} between the first and second voltage terminals of the magnetic field receiver by using a voltage measurement device connected between the first and second voltage terminals, while keeping disconnected the first pair of current terminals of the magnetic field receiver and the second pair of voltage terminals of the first magnetic field transmitter so that the impedance between the first pair of current terminals, and the impedance between the second pair of voltage terminals are representative of an open circuit;
- determining a local magnitude and/or variation of a time varying magnetic field generated closely by the magnetic particles on the basis of the measured differential voltage.

BRIEF DESCRIPTION OF THE DRAWINGS

The invention will be better understood on the basis of the following description which is given in correspondence with the annexed figures and as an illustrative example, without restricting the object of the invention. In the annexed figures:

- Figures 1A, 1B, 1C and 1D are respectively an exploded view and an integrated view of a magnetic hybrid AMR/PHR based sensing device according to a first embodiment of the invention wherein a magnetic field receiver and a magnetic field transmitter are used, a simplified view of the same sensing device highlighting the main components of the sensing, and an exemplary illustration of an offset angle α between the magnetic field receiver and the magnetic field transmitter;

- Figures 2A, 2B, and 2C are respectively a first view illustrating an experimental set up testing the behavior of the magnetic hybrid AMR/PHR based sensing device according to the first embodiment of Figures 1A-1B, a second view of the evolution of the detected local magnetic field by the magnetic field receiver versus a known driven AC field while applying different bias currents onto the first and second current terminals of the magnetic field receiver, and a third view of the co-evolution versus time of the measured voltage V_{MR} by the sensing device and a driven voltage applied to the Helmholtz coils following a time varying triangular waveform ;

- Figures 3A to 3F are views illustrating variant shapes of the electromagnetic track of the magnetic field receiver as shown in Figures 1A-1B, respectively a multi-ring shape, an oval shape, a square shape, a diamond shape, a multi-diamond shape, and a cross junction shape;

- Figures 4A to 4C are views illustrating exemplary variants of the first spacer as shown, respectively a layer with pierced longitudinal holes to drive magnetic particles, a layer with a single pierced longitudinal hole to drive magnetic particles and a lateral hole pierced to access the single hole and permit a control of the magnetic state of the particle(s), and a layer with a perpendicular access hole extending perpendicularly from a central void area of a first magnetic field transmitter;

- Figured 5A and 5B are respectively a view of a magnetic measurement system according to a first system embodiment using a sensing device according to the first sensing device embodiment of Figure 1B and configured to implement a magnetic measurement method according to a first method embodiment, and a flow chart magnetic measurement method according to the first method embodiment ;

- Figured 6A and 6B are respectively a view of a magnetic measurement system according to a second system embodiment using a sensing device according to the first sensing device embodiment of the invention with a first spacer as shown in Figures 4A-4C and configured to implement a magnetic measurement method according to a second method embodiment, and a flow chart magnetic measurement method according to the second method embodiment;

- Figures 7A and 7B are respectively an exploded view and an integrated view of a magnetic hybrid AMR/PHR based sensing device according to a second sensing device embodiment of the invention where a magnetic field receiver and two magnetic field transmitters are used;

- Figure 8 is schematic view illustration the differential mode operation of the sensing device of Figures 7A and 7B;
- Figures 9A and 9B are respectively a view of a magnetic measurement system according to a third system embodiment using a sensing device according to the second sensing device embodiment of Figure 7B and configured to implement a magnetic measurement method according to a third method embodiment, and a flow chart magnetic measurement method according to the third method embodiment.

DETAILED DESCRIPTION OF SOME EMBODIMENTS

According to Figures 1A, 1B and 1C and a first device embodiment of the invention, a magnetic hybrid AMR/PHR based sensing device 2 is configured for detecting local magnitude and/or variation of a magnetic field generated remotely or closely by one or several magnetic source(s).

The magnetic sensing device 2 comprises a magnetic field receiver 4 as a first component and a first magnetic field transmitter 6 as a second component, and a substrate 8 serving as support of the set formed by the magnetic field receiver 4 and the first magnetic field transmitter 6.

The magnetic field receiver 4 has a structure of a magnetic hybrid AMR/PHR sensor and includes:

- a magneto-resistive first track 10 with a closed loop shape or a cross junction shape, here a magneto-resistive single ring,
- a first pair 12 of current terminals 14, 16, formed with a first current terminal 14 and a second current terminal 16, facing each other, contacting with the magneto-resistive first track 8 and forming a first easy axis 18,
- a first pair 22 of voltage terminals 24, 26, formed with a first voltage terminal 24 and a second voltage terminal 26, facing each other, contacting with the magneto-resistive first track 10 and forming a first hard axis 28, orthogonal to the first easy axis 18.

The first magnetic field transmitter 6 is configured for being excited by a DC and/or AC current supplied by a bias current generator or by a time varying external magnetic field to be measured, and includes:

- a magneto-resistive or low resistive second track 40 with a closed loop shape or a cross junction shape,
- a second pair 42 of current terminals 44, 46, formed with a third current terminal 44 and a fourth current terminal 46, facing each other, contacting with the second track 40 and forming a second easy axis 48,

- a second pair 52 of voltage terminals 54, 56, formed with a third voltage terminal 54 and a fourth voltage terminal 56, facing each other, contacting with the second track 40 and forming a second hard axis 58, orthogonal to the second easy axis 48.

The second track 40 of the first magnetic field transmitter is covered by a passivation layer 60.

The magnetic field receiver 4 and the first magnetic field transmitter 6 are superimposed, secured to and separated by a first insulating spacer 62 configured to align respectively the first easy axis 18 and the first hard axis 28 to the second easy axis 48 and the second hard axis 58, then rotate the said second axis 48, 58, from the said first axis 18, 28 about a common perpendicular axis 64 at a predetermined fixed offset angle α, and to maintain this axis arrangement as well as a fixed separation distance e_{12} between the first track 6 and the second track 8 in a range from few micrometers to few nanometers.

Here, in the Figures 1A and 1B the value of the predetermined offset angle α is assumed equal to zero.

More generally, the offset angle α formed between the firs easy axis 18 and the second easy axis, or equivalently between the first hard axis 28 and the second hard axis 58 is selected in the range [0 degree, 90 degree] so that the sensitivity of the magnetic sensor is maximal, and preferably is comprised within the range [15 degree, 25 degree] as shown in the Figure 1D.

According to the Figure 1D, the offset angle α that optimizes the magnetic sensing device 2 is assumed to be equal 20 degrees.

According to Figure 2A an experimental system 102 for testing the behavior of the magnetic hybrid AMR/PHR based sensing device 2 according to the first embodiment of Figures 1A to 1D comprises a sample unit to be tested 2 as defined in Figures 1A to 1D, a pair of Helmholtz coils 106, 108 configured to generate a magnetic driven field H_{AC} oscillating at a predetermined frequency ω applied in the vicinity of the sensing device 2 along the second hard axis of the first magnetic field transmitter, a bias current generator 112 to polarize the magnetic field receiver, and a measurement unit 114 connected to the voltage terminals 24, 26 of the AMR/PHR magnetic field receiver 4 and locked to a current signal taken at the current terminals 44, 46 of the track 40 of the first magnetic field transmitter 6.

The two Helmholtz coils 16, 108 share and are connected to a driven current or voltage generator 118 configured to inject a DC+AC or AC driven current in the Helmholtz coils 16, 108, that can be translated into a driven voltage

expressed in volts and ranging from -1.0 V (Volt) to +1.0 V (Volt) on a first abscissa axis in the Figure 2B.

Here, the magnetic field receiver and the first magnetic field transmitter are separated by a passivation layer forming the first spacer, the thickness thereof is comprised within 100nm to 1µm and the diameter of the first magneto-resistive ring track is here equal to 600 µm.

According to the Figure 2B, the evolution of the magneto-resistive voltage V_{MR}, measured by the sensing device 2 between the voltage terminals 24, 26 of the track 10 of the magnetic field receiver 4 and expressed in mV (milliVolt) on a second ordinate axis 134, versus the driven voltage, is plot in a set 138 of curves 142, 144, 146, 148, 150, 152 corresponding to a DC bias current injected through the current terminals 14, 16 of the AMR/PHR track 10 of the magnetic receiver 4 respectively equal to 0 mA, 0.1 mA, 0.5 mA, 1 mA, 2 mA and 5 mA.

As shown in the Figure 2B, the measurements of the sensing voltage V_{MR} achieved by using the test configuration of the Figure 2A, indicate that the curves 142, 144, 146, 148, 150, 152 are almost the same and are therefore independent from the intensity of the bias current injected in the AMR/PHR track 1 of magnetic field receiver 4, the magnetic field receiver forming an actual sensor of a local magnetic field along the first hard axis and the first magnetic field transmitter forming a kind of local magnetic field lens.

Regardless of the intensity of an injected bias current, an alternative AC magnetic field H_{AC} at a given frequency ω induces an alternative current with the same frequency ω for the receiver 4 of the sensing device 2. The amplitude of the induced current is proportional to the magnitude of the alternative magnetic field H_{AC}. When injecting a bias current into the track 10 of the receiver 4, no increment is observed in the detected voltage signal V_{MR} with the magnitude of the injected bias current but only an increment of the noise through the thermal noise signal component as shown in the Figure 2C.

According to Figure 2C, a direct DC bias current is injected into the magneto-resistive first track 10 of the receiver 4 through the first and second current terminals and a driven voltage is applied to the Helmholtz coils following a time varying triangular waveform 162. The corresponding evolution of the measured voltage V_{MR} versus time t is illustrated by a curve 164.

Accordingly, the sensing device 2 according the invention is configured to a avoid any injection of a direct DC bias current through the first and second current terminals by implementing an open circuit between the said first and second current terminals through an insulating material.

In such a test configuration it is thus shown that the no bias current need to be injected, which means that the AMR/PHR sensor forming the magnetic field receiver 4 does not need a power voltage supply to detect a local magnetic field. Accordingly, the magnetic field receiver can detect the induced collimated field generated by the track second track of the first magnetic field transmitter also without any supply power.

Generally, the shape of the magnetic field receiver and the shape of the first magnetic field transmitter are shapes comprised in the set of the closed loop shapes among the shapes of a ring junction, a multi-ring junction, an oval junction, a multi-oval junction, a diamond junction, a multi-diamond junction, a square junction, a multi-square junction, a rectangular junction, a multi-rectangular junction, and the shape of a cross junction.

As example, a multi-ring junction 170 is illustrated in Figure 3A with a pair of current terminals 172, 174 and a pair of voltage terminals 176, 178.

As example, an oval junction 180 is illustrated in Figure 3B with a pair of current terminals 182, 184 and a pair of voltage terminals 186, 188.

As example, a square junction 190 is illustrated in Figure 3C with a pair of current terminals 192, 194 and a pair of voltage terminals 196, 198.

As example, a diamond junction 200 is illustrated in Figure 3D with a pair of current terminals 202, 204 and a pair of voltage terminals 206, 208.

As example, a multi-diamond junction 210 is illustrated in Figure 3E with a pair of current terminals 212, 214 and a pair of voltage terminals 216, 218.

As example, a cross junction 220 is illustrated in Figure 3F with a pair of current terminals 222, 224 and a pair of voltage terminals 226, 228.

According to the Figures 1A and 1B the first spacer is a bulky homogeneous layer made of a rigid insulating material.

As a first variant, the spacer is a rigid structure made of a rigid insulating material having pillars and beams and/ or ribs, having voids filled by an insulating gas or vacuum.

According to the Figure 4A and as a second variant, the first spacer is a bulky layer 232 made of a rigid insulating material and pierced with at least one longitudinal hole(s), here three longitudinal holes 234, 236, 238, directed along a direction 240 included in the extension plane of the layer 232, to drive magnetic particle(s) and without lateral opening. For example, the direction of the longitudinal holes is chosen so that when the first spacer and the magnetic field receiver are integrated the first hard axis of the magneto-resistive first track and the extension direction of the longitudinal holes are parallel.

According to the Figure 4B and as a third variant, the first spacer is a bulky layer 242 made of a rigid insulating material and pierced with at least one longitudinal hole(s), here a single longitudinal hole 244, directed along a direction 246 included in the extension plane of the layer, to drive magnetic particle(s). The longitudinal hole(s), here the single hole 244, have/has lateral(s) opening, here one lateral opening 248, connected to secondary longitudinal hole(s), here one se secondary longitudinal hole 250 in the Figure 4B, to provide a control access for controlling a magnetic state of the particle(s).

According to the Figure 4C and a fourth variant, the first spacer is a bulky layer 252 made of a rigid insulating material and pierced perpendicularly to the layer plane with at least one longitudinal hole(s), here a single longitudinal hole 254, at a predetermined location 256. The predetermined location 256 is determined so that the longitudinal hole 254 opens at one end to a central opening 258 of the second track 40 of the first magnetic field transmitter 6, when the second track 40 of the first transmitter 6 has such a central opening 258 and when the first spacer and the first magnetic field transmitter are integrated.

According to the Figures 1A-1C and 4A-4C, the rigid insulating material of the first spacer is comprised among the dioxide of silicon SiO_2 .

The thickness e_{12} of the insulating layer of the first spacer is ranging from 1 µm to 5 µm, or from 600 nm to 1 µm, or from 200 nm to 600 nm, or from 50 nm to 200 nm, or from 10 nm to 50 nm, or from 1 nm to 10 nm.

According to the Figures 1A-1C and 4A-4C, the material of the first track is a magneto-resistive material among the bi-layer structure material, in particular Ta/NiFe/IrMn/Ta, a tri-layer structure material including a ferromagnetic film, a metal and an anti-ferromagnetic film, in particular Ta/NiFe/Cu/IrMn/Ta, and a spin-valve structure material, in particular Ta/NiFe/Cu/NiFe/IrMn/Ta; and

the material of the second track is a magneto-resistive material among a bi-layer structure material, in particular Ta/NiFe/IrMn/Ta, a tri-layer structure material including a ferromagnetic film, a metal and an anti-ferromagnetic film, in particular Ta/NiFe/Cu/IrMn/Ta, and a spin-valve structure material, in particular Ta/NiFe/Cu/NiFe/IrMn/Ta, or is a low resistive material among gold, copper and silver metals.

The accuracy of the alignment of the axis before their rotation is below 10 nm and the accuracy of the set α angle is below 1,0 degree, preferably below 0, 02 degree.

Generally, the magnetic field receiver 4 and the first magnetic field transmitter 5 are identical, or the magnetic field receiver 4 and the first magnetic

field transmitter 6 mutually differ by the shape of their magnetic track, and/or the material of their electromagnetic track.

According to Figure 5A and a first embodiment, a magnetic measuring system 262 comprises the magnetic hybrid AMR/PHR based sensing device 2 as described in the Figures 1A-1B, and a voltage measurement device 264 connected between the first and second voltage terminals.

The magnetic measuring system 262 is configured for keeping disconnected the first pair of current terminals 14, 16 of the magnetic field receiver 4, the second pair of current terminals 44, 46 of the first magnetic field transmitter 6, and the second pair of voltage terminals 54, 56 so that the impedance between the first pair of current terminals 14, 16, the impedance between the second pair of current terminals 44, 46, the impedance between the second pair of voltage terminals are representative of open circuits.

The voltage measurement device 264 comprises an amplifier circuit, connected to the first and second voltage terminals, for amplifying a measurement signal and/or cancelling an offset voltage from the said measurement signal.

In a particular embodiment, the amplifier is integrated within the magnetic sensing device 2.

The magnetic measuring system 262 is well suited to measure local magnitude and/or variation of a time varying magnetic field, generated remotely or closely by one or several magnetic source(s) and to implement the magnetic measuring method according to the invention as described in the Figure 5B.

According to Figure 5B and a first method embodiment of the invention, a magnetic measuring method 302 comprises a first set of steps for measuring local magnitude and/or variation of a magnetic field generated remotely or closely by one or several magnetic source(s).

In a first step 304, a magnetic hybrid AMR/PHR based sensing device as described here above in the Figures 1A-1C and 4A-4C, is provided. The sensing device comprises a magnetic field receiver and a first magnetic field transmitter as described here above.

Then in a second step 306, a differential voltage V_{MR} between the voltage terminals of the first pair is measured by a voltage measurement device connected between the first and second voltage terminals, while keeping disconnected the first pair of current terminals of the magnetic field receiver, the first pair of voltage terminals of the magnetic field receiver, and the second pair of current terminals of the first magnetic field transmitter, so that the impedance between the first pair of current terminals, the impedance between the first pair of voltage terminals, the

impedance between the second pair of current terminals are representative of open circuits.

Then in a third step 308, a local magnitude and/or variation of a time varying magnetic field, generated remotely or closely by one or several magnetic source(s), is determined on the basis of the measured differential voltage.

According to Figure 6A and a second system embodiment, a magnetic measuring system 322 according to the invention comprises the magnetic hybrid MR/PHR based sensing device 2 as described in the Figures 1A-1B, one second track current source 324 for supplying a DC and/or AC current to the second track 40 of the first magnetic field transmitter 6 and a voltage measurement device 334, similar to the voltage measurement device 264 of the Figure 5A and connected between the first pair of voltage terminals 24, 26.

The magnetic measuring system 322 is configured for keeping disconnected the first pair of current terminals 14, 16 of the magnetic field receiver 4, the second pair of voltage terminals 54, 56 so that the impedance between the first pair of current terminals 14, 16, the impedance between the second pair of voltage terminals 54, 56 are representative of open circuits.

The voltage measurement device 334 comprises an amplifier circuit, connected to the first and second voltage terminals 24, 26, for amplifying a measurement signal and/or cancelling an offset voltage from the said measurement signal.

In a particular embodiment, the amplifier is integrated within the magnetic sensing device 2.

Moreover, here the first spacer 342 is similar to a spacer among the described spacers of Figure 4A, 4B and 4C. Such a spacer 342 is configured to drive magnetic particles 348 in the vicinity and close to an active area of the magneto-resistive track 10 of the magnetic field receiver 4.

The magnetic measuring system 322 is well suited to measure local magnitude and/or variation of a magnetic field, generated closely by one or several magnetic particles and to implement a magnetic measuring method according to a second method embodiment described in Figure 6B.

The magnetic particles to be detected by the magnetic sensing device according to the invention are comprised in the family of:

.- any switchable molecular nanoparticles in form of $A_hB_k[M(CN)_6]_l.mH_2O$, where A can be Co, Ni, Fe, etc, B and M can be various transition metals (Fe^{II}, Fe^{III}, Mn^{II}, Mn^{III}, Co^{II}, Co^{III}, Ni^{II}, Ni^{III}...);

.- any Hoffman clathrate switchable molecular nanoparticles in form of $Fe^{II}(A)[M^{II}(CN)_4].nH_2O$, where A is the ligand field (pz, azpy,...) and M^{II} is a metallic ion (Ni, Pd, and Pt);

.- any spin crossover nanoparticles of triazole family: [Fe(hptrz)3]OTs)2.(hptrz=4-heptyl-1,2,4-triazole and OTs=toluenesulfonyl);

.- any paramagnetic or superparamagnetic particles: Fe_2O_3, Fe_3O_4, $Fe@Fe_3O_4$, $CoFe@Fe_3O_4$, Ni, ...;

.- any ferromagnetic particles: Fe, CoFe, Ni;

.- any anti-ferromagnetic particles;

.- any particles with multilayer structure Ti/Fe, Cr, NiO, Co_3O_4, a-Fe_2O_3, CuO, MnO,Cr_2O_3 nano-particles;

.- any magnetic bead made of Fe_3O_4 in the polymer or any amorphous (silica, xerogel, aerogel, ...) matrix with the sphere shape and any size ranging from 50 nm to 10 µm.

According to Figure 6B and a second method embodiment of the invention, a magnetic measuring method 352 comprises a second set of steps for measuring local magnitude and/or variation of a magnetic field generated closely by one or several magnetic source(s).

In a first step 354, a magnetic hybrid AMR/PHR based sensing device 2, as described in the Figures 1A-1C and 4A-4C, is provided. The sensing device comprises a magnetic field receiver and a first magnetic field transmitter as described here above as well as a first spacer similar to one of the spacers of Figure 4A to 4C.

Then in a second step 356, a bias DC and/or AC current is injected in the electromagnetic second track 40 of the first magnetic field transmitter 6 by using an electrical bias current source connected between the third and fourth current terminals of the first magnetic field transmitter.

Then in third step 358, a set of one or several magnetic particles sensitive to a magnetic field are driven in the vicinity or in contact of an active area of the magneto-resistive track of the magnetic field receiver, the active area being located under the electromagnetic second track of the first magnetic field transmitter.

Then in a fourth step 360, a differential voltage V_{MR} between the first and second voltage terminals 24, 26 of the magnetic field receiver 4 is measured by a voltage measurement device connected between the first and second voltage terminals, while keeping disconnected the first pair of current terminals 14, 16 of the magnetic field receiver and the second pair of voltage terminals 54, 56 of the first magnetic field transmitter so that the impedance between the first pair of

current terminals 14, 16, and the impedance between the second pair of voltage terminals 54, 56 are representative of open circuits.

Then in fifth step 362, a local magnitude and/or variation of a magnetic field generated closely by the magnetic particles is determined on the basis of the measured differential voltage V_{MR}.

According to Figures 7A and 7B and a second magnetic sensing device embodiment, a magnetic hybrid MR/PHR based sensing device 402 comprises the same following components of the magnetic sensing device 2 of Figures 1A-1B: the magnetic field receiver 4, the first magnetic field transmitter 6, the first spacer 62, the passivation layer 60, and the substrate 8. The magnetic field receiver 4, the first magnetic field transmitter 6 and the first spacer 62 of the magnetic sensing device 402 according the second device embodiment are also arranged in the same way as for the magnetic sensing device 2 of Figures 1A-1B according to the first embodiment.

The magnetic sensing device 402 according to the second embodiment differs from the magnetic sensing device 2 according to the first embodiment in that it comprises further a second magnetic field transmitter 406 as a third component.

The second magnetic field transmitter 406 is configured for being excited by a DC and/or AC supplied bias current or by an external magnetic field to be measured, and includes:

- a magneto-resistive or low resistive third track 440 with a closed loop shape or a cross junction shape,
- a third pair 442 of current terminals 444, 446 formed with a fifth current terminal 444 and a sixth current terminal 446, facing each other, contacting with the third track 440 and forming a third easy axis 448,
- a third pair 452 of voltage terminals 454, 456, formed with a fifth voltage terminal 554 and a sixth voltage terminal 556, facing each other, contacting with the third track 440 and forming a third hard axis 458, orthogonal to the third easy axis 448.

The first magnetic field transmitter 6 and the second magnetic field transmitter 406 are identical.

The first magnetic field transmitter 6, the magnetic field receiver 4 and the second magnetic field transmitter 406 are superimposed and mutually secured through the first spacer 62 and a second spacer 462 so that the field magnetic receiver 4 is sandwiched between the first field magnetic transmitter 6 and the second field magnetic transmitter 106.

The second insulating spacer 462 is configured to secure the second magnetic field transmitter 406 to the magnetic field receiver 4 on the opposite side of the first insulating spacer 62, once performed an alignment of the respective first easy axis 18 and the first hard axis 28 to the respective third easy axis 448 and the third hard axis 458, followed by a rotation of the said third axis 448, 458 from the said first axis 18, 28 about the common perpendicular axis 464 at the same predetermined fixed offset angle α of the Figures 1A-1D, and is configured to maintain this axis arrangement as well as a fixed separation distance e_{13} between the first track 10 and the third track 440 equal to the fixed separation distance e_{12} between the first track and the second track.

The second spacer 462 is a bulky homogeneous layer made of the same rigid insulating material as the insulating material of the first spacer 62.

The whole sandwich structure formed by the second magnetic field transmitter 406, the second spacer 462, the magnetic field receiver 4, the first spacer 62, the first magnetic field transmitter and the optional passivation layer, is supported by the substrate 8 through the second magnetic field transmitter 6 and the second spacer 462.

According to Figure 8, a map 472 at a given fixed time of a section of the magnetic field generated by the second magneto-resistive track 40 of the first magnetic field transmitter 6 and the third magneto-resistive track 440 of the second magnetic field transmitter 406 by a plane P, perpendicular to the extension plane Q of the first track 10 of the magnetic field receiver 4 and including the line 476 passing through the third pair of the current terminals 24, 26, exhibits a symmetry around the line 476 in a reference configuration without magnetic particle(s).

Accordingly the magnetic sensing device 402 can be used in a differential mode to detect with a high sensitivity the variation of the magnetic field close to the surface of the first track of the magnetic field receiver when magnetic particles are driven close to and above the said surface in Figure 8.

It should be noted that the tracks 40, 440 of the magnetic field transmitters can be only low resistive track made of a material such as copper, aluminum, gold or silver for example to enhance magnetic field.

According to Figure 9A and a third system embodiment, a magnetic measuring system 502 according to the invention comprises the magnetic hybrid MR/PHR based sensing device 402 as described in the Figures 7A-7B , a second track current source 524 and a third track current source 526 for supplying a DC and/or AC current respectively to the second track 40 of the first magnetic field transmitter 6 and the third track 440 of the second magnetic field transmitter 406,

and a voltage measurement device 534, similar to the voltage measurement devices 264, 334 of the Figures 5A and 6A and connected between the first pair of voltage terminals 24, 26.

The magnetic measuring system 502 is configured for keeping disconnected the first pair of current terminals 14, 16 of the magnetic field receiver 4, the second pair of voltage terminals 54, 56, and the third pair of voltage terminals 454, 456, so that the impedance between the first pair of current terminals 14, 16, the impedance between the second pair of voltage terminals 54, 56, the impedance between the third pair of voltage terminals 454, 456 are representative of open circuits.

The second track current source 524 and the third track current source 526 are configured and connected to the second track of the first magnetic field transmitter and to the third track of the second magnetic field transmitter in order to generate two magnetic fields, symmetric to the plane of the magnetic field receiver and polarized with opposite direction.

The voltage measurement device 434 comprises an amplifier circuit, connected to the first and second voltage terminals 24, 26, for amplifying a measurement signal and/or cancelling an offset voltage from the said measurement signal.

In a particular embodiment, the amplifier is integrated within the magnetic sensing device 402.

Moreover, here the first spacer 462 is similar to a spacer among the described spacers of Figure 4A, 4B and 4C. Such a spacer 462 is configured to drive magnetic particles 508 in the vicinity and close to an active area of the magneto-resistive track 10 of the magnetic field receiver 4.

The magnetic measuring system 502 is well suited to measure local magnitude and/or variation of a magnetic field, generated closely by one or several magnetic particles and to implement a magnetic measuring method according to a third method embodiment described in Figure 9B.

The magnetic particles that can be detected by the third magnetic measuring system are the same magnetic particles that can be detected by the magnetic measuring system of Figure 6A and are listed in description of the Figure 6A.

According to Figure 9B and a third method embodiment, a magnetic measuring method 582 comprises a third set of steps for measuring local magnitude and/or variation of a magnetic field generated closely by one or several magnetic source(s).

In a first step 584, a magnetic hybrid AMR/PHR based sensing device 402 according to the second device embodiment as described in the Figures 7A-7B is provided. The magnetic sensing device 402 comprises a magnetic field receiver 4, a first magnetic field transmitter 6 and a second magnetic field transmitter 406. The magnetic sensing device 402 is configured to operate in a differential mode.

Then in a second step 586, a bias DC and/or AC current is injected in the second electromagnetic track of the first magnetic field transmitter and in the third magnetic track of the second magnetic field transmitter by using an electrical bias current source, connected between the third and fourth current terminals of the first magnetic field transmitter and between the fifth and the sixth current terminals of the second magnetic field transmitter, so that the excitation magnetic fields generated by the first magnetic field transmitter and the second magnetic field transmitter are polarized on opposite direction.

Then in a third step 588, a set of one or several magnetic particles sensitive to a magnetic field are driven in the vicinity or in contact of an active area of the magnetic receiver 4 located under the electromagnetic track 40 of the first magnetic field transmitter 6.

Then in a fourth step 590 a differential voltage V_{MR} between the first and second voltage terminals 24, 26 of the magnetic field receiver 4 is measured by a voltage measurement device, connected between the first and second voltage terminals 24, 26, while keeping disconnected the first pair of current terminals of the magnetic field receiver and the second pair of voltage terminals of the first magnetic field transmitter so that the impedance between the first pair of current terminals, and the impedance between the second pair of voltage terminals are representative of an open circuit;

Then in a fifth step 592, a local magnitude and/or a variation of a time varying magnetic field generated closely by the magnetic particles are determined on the basis of the measured differential voltage V_{MR}.

The sensing device, the magnetic measuring system, the magnetic measuring method according to the various embodiments as described here above can be used to detect and quantify a known time varying (in particular AC) magnetic field source or to detect an unknown time varying (in particular AC) magnetic field from other noise sources. There is no need to drive an electric power to the magneto-resistive AMR/HR sensor for detecting the time varying magnetic field. The use of the sensing device according to the invention can be broadened up to many fields of application requiring low power consumption sensing devices such as robotic and space applications.

For the application of gas sensing, the magnetic field receiver is used to detect the presence of the gas through a magnetic field change caused the magnetic particle(s) deposited on the sensing surface of its AMR/PHR track, while the first magnetic field transmitter is configured to generate the magnetic field. The magnetic field receiver operating as a detector detects the magnetic field signal without need of a power supply and generating an undesired thermal noise caused by a resistive Joule effect.

Accordingly the sensing device of the invention permits a decrease of its power consumption while detecting a local magnetic field with high sensitivity. As a result new applications are rendered possible to AMR/PHR sensors requiring low power consumption.

As other examples, the magnetic field sensing device according to the invention can be used for following applications:

- detection of underground electrical power line,
- detection of magnetic field generated from magnetization of magnetic materials ranging from deposited nano-particle(s) to bulk magnetic materials;
- scanning geological rock in caves;
- scanning the magnetic domains of (ferro)magnetic materials mapping the self-magnetic field generated by magnetic sensors (AMR/PHR/GMR/Hall/GMI/TMR etc…) ;
- space applications that needs to detect the magnetic field, to save mass and to operate at low temperature.

Advantageously the sensing device according to the invention is a low power consumption, small and compact device by saving the weight of the power stage supply and by allowing an operation at temperatures ranging from 4°K to 400°K. The sensing device operates within large frequency range from 1 to 10 kHz without Joule effect dissipation and any heating process.

For the same sensitivity, the sensing device according to the invention is less bulky than the conventional inductance of flux gate. The size of the sensing device is the order of the micrometer for the AMR/PHR itself and the order of the cm^3 for the packaging.

In addition to its light weight the magnetic sensing device of the invention is easy to manufacture, which permits a low cost production rate for a mass production.

CLAIMS

1. A magnetic hybrid AMR/PHR based sensing device for detecting local magnitude and/or variation of a magnetic field generated remotely or closely by one or several magnetic source(s), and comprising:

- a magnetic field receiver (4), as a first component, having a structure of a magnetic hybrid AMR/PHR sensor and that includes

  - a magnetoresistive first track (10) with a closed loop shape or a cross junction shape,
  - a first pair (12) of current terminals formed with a first current terminal (14) and a second current terminal (16), facing each other, contacting with the magnetoresistive first track (10) and forming a first easy axis (18),
  - a first pair (22) of voltage terminals formed with a first voltage terminal (24) and a second voltage terminal (26), facing each other, contacting with the magnetoresistive first track (10) and forming a first hard axis (28), orthogonal to the first easy axis (18),

characterized in that

the magnetic hybrid AMR/PHR based sensing device comprises:

- a first magnetic field transmitter (6) as a second component, configured for being excited by a DC and/or AC supplied bias current or by an external magnetic field to be measured and that includes

  - a magnetoresistive or low resistive second track (40) with a closed loop shape or a cross junction shape,
  - a second pair (42) of current terminals formed with a third current terminal (44) and a fourth current terminal (46), facing each other, contacting with the second track (40) and forming a second easy axis (48),
  - a second pair (52) of voltage terminals formed with a third voltage terminal (54) and a fourth voltage terminal (56), facing each other, contacting with the second track (40) and forming a second hard axis (58), orthogonal to the second easy axis (48), and

in that the magnetic field receiver (4) and the magnetic field transmitter (6) are superimposed, secured to and separated by a first insulating spacer (62) configured to align respectively the first easy axis (18) and the first hard axis (28) to the second easy axis (48) and the second hard axis (58), then rotate the said second axis (48, 58) from said first axis (18, 28) at a predetermines fixed offset angle α , and to maintain this axis arrangement as well as a fixed separation

distance e_{12} between the first track (10) and the second track (40) in a range from few micrometers to few nanometers.

2.- The magnetic hybrid AMR/PHR based sensing device according to claim 1, wherein the first spacer (62) is a:

- a rigid structure made of a rigid insulating material having pillars and beams and/ or ribs, having voids filled by an insulating gas or vacuum; or
- a bulky homogeneous layer made of a rigid insulating material; or
- a bully layer (232) made of a rigid insulating material and pierced with at least one longitudinal hole(s) (234, 236, 238), directed along a direction (240) included in the extension plane of the layer, to drive magnetic particle(s) and without lateral opening; or
- a bulky layer (242) made of a rigid insulating material and pierced with at least one longitudinal hole(s) (244), directed along a direction (246) included in the extension plane of the layer (242), to drive magnetic particle(s), the longitudinal hole(s) (244) having lateral(s) opening (248) connected to secondary longitudinal hole(s) (250) to provide a control access for controlling a magnetic state of the particle(s); or
- a bulky layer (252) made of a rigid insulating material and pieced perpendicularly to the layer plane with at least one longitudinal hole(s) (254), when the second track (40) of the first transmitter (6) has a central opening (258).

3. The magnetic hybrid AMR/PHR based sensing device according to any of claims 1 to 2, wherein

the rigid insulating material of the first spacer (62) is comprised among the dioxide of silicon SiO_2, and/or

the thickness e_{12} of the insulating layer of the first spacer (62) is ranging from 1 µm to 5 µm, or from 600 nm to 1 µm, or from 200 nm to 600 nm, or from 50 nm to 200 nm, or from 10 nm to 50 nm, or from 1 nm to 10 nm.

4. The magnetic hybrid AMR/PHR based sensing device according to any of claims 1 to 3, wherein the shape of the track (10) of the magnetic field receiver (4) and the shape of the track (40) of the first magnetic field transmitter (6) are shapes comprised in the set of the closed loop shapes among the shapes of a ring junction, a multi-ring junction (170), an oval junction (180), a multi-oval junction, a diamond junction (200), a multi-diamond junction (210), a square junction (200), a multi-square junction, a rectangular junction, a multi-rectangular junction, and the shape of a cross junction (220).

5. The magnetic hybrid AMR/PHR based sensing device according to any of claims 1 to 4, wherein

the material of the first track (10) is a magneto-resistive material among the bi-layer structure material, in particular Ta/NiFe/IrMn/Ta, a tri-layer structure material including a ferromagnetic film, a metal and an anti-ferromagnetic film, in particular Ta/NiFe/Cu/IrMn/Ta, and a spin-valve structure material, in particular Ta/NiFe/Cu/NiFe/IrMn/Ta; and

the material of the second track (40) is a magneto-resistive material among a bi-layer structure material, in particular Ta/NiFe/IrMn/Ta, a tri-layer structure material including a ferromagnetic film, a metal and an anti-ferromagnetic film, in particular Ta/NiFe/Cu/IrMn/Ta, and a spin-valve structure material, in particular Ta/NiFe/Cu/NiFe/IrMn/Ta, or is a low resistive material among gold, copper and silver metals.

6. The magnetic hybrid AMR/PHR based sensing device according to any of claims 1 to 5, wherein the offset angle α formed between the first easy axis (18) of the magnetic field receiver and the second easy axis (48) of the first field transmitter is selected in the range [0 degree, 90 degrees] so that the sensitivity of the sensing device is maximal, and preferably is comprised within the range [15 degrees, 25 degrees].

7. The magnet hybrid AMR/PHR based sensing device according to any of claims 1 to 6, wherein the accuracy of the alignment of the axis before their rotation is below 10 nm, and the accuracy of the set α angle is below 1.0 degree, preferably below 0.02 degree.

8. The magnet hybrid AMR/PHR based sensing device according to any of claims 1 to 7, wherein

the magnetic field receiver (4) and the first magnetic field transmitter (6) are identical, or

the magnetic field receiver (4) and the first magnetic field transmitter (6) mutually differ by the shape of their electromagnetic track (10, 40) , and/or the material of their electromagnetic track (10, 40).

9. The magnet hybrid AMR/PHR based sensing device according to any of claims 1 to 8, comprising further

- a second magnetic field transmitter (406) as a third component, configured for being excited by a DC and/or AC supplied bias current or by an external magnetic field to be measured and that includes

- a magnetoresistive or low resistive third track (440) with a closed loop shape or a cross junction shape,
- a third pair (442) of current terminals formed with a fifth current terminal (444) and a sixth current terminal (446), facing each other, contacting with the third track (440) and forming a third easy axis (448),
- a third pair (452) of voltage terminals formed with a fifth voltage terminal (454) and a sixth voltage terminal (456), facing each other, contacting with the third track (440) and forming a third hard axis (458) , orthogonal to the third easy axis (448), and

wherein

the first magnetic field transmitter (6) and the second magnetic field transmitter (406) are identical, and

the first magnetic field transmitter (6), the magnetic field receiver (4) and the second magnetic field transmitter (406) are superimposed and mutually secured through the first spacer (62) and a second spacer (462) so that the field magnetic receiver (4) is sandwiched between the first field magnetic transmitter (6) and the second field magnetic transmitter (406).

10. The magnetic hybrid AMR/PHR based sensing device according to the claim 9, wherein

the second insulating spacer (462) is configured to secure the second magnetic field transmitter (406) to the magnetic field receiver (4) on the opposite side of the first insulating spacer (62) , once an alignment of the respective first easy axis (18) and the first hard axis (28) to the respective third easy axis (448) and the third hard axis (458), followed by a rotation of the said third axis from the said first axis at the predetermined fixed offset angle α, and to maintain this axis arrangement as well as a fixed separation distance e_{13} between the first track (10) and the third track (440) equal to the fixed separation distance e_{12} between the first track (10) and the second track (40); and

the second spacer (462) is a bulky homogeneous layer made of the rigid insulating material as the insulating material of the first spacer (62).

11. The magnetic hybrid MR/PHR based sensing device according any of claims 1 to 10, comprising further

either a single second track current source (324) for supplying a DC and/or AC current to the second track (40) of the first magnetic field transmitter (6) when the magnetic sensing device comprises the magnetic field receiver and the first magnetic field transmitter as a single magnetic field transmitter,

or a second track current source (524) and a third track current source (526) for supplying a DC and/or AC current respectively to the second track (40) of the first magnetic field transmitter (6) and to the third track (440) of the second magnetic field transmitter (406) when the magnetic sensing device comprises the magnetic field receiver and two first and second magnetic field transmitter to operate in a differential mode, the second track current source and the third track current source being configured and connected to the second track of the first magnetic field transmitter and to the third track of the second magnetic field transmitter in order to generate two magnetic fields, symmetric to the plane of the magnetic field receiver and polarized with opposite direction.

12. The magnetic hybrid AMR/PHR based sensing device according any of claims 1 to 11, comprising further an amplifier circuit connected to the first and second voltage terminals for amplifying a measurement signal and/or cancel a offset voltage from the said measurement signal.

13. A magnetic measuring method for measuring local magnitude and/or variation of a magnetic field generated remotely or closely by one or several magnetic source(s),

the magnetic measuring method comprising the steps of :

- providing (304) a magnetic hybrid AMR/PHR based sensing device (2) comprising a magnetic field receiver (4) and a first magnetic field transmitter (6) as defined in any of claims 1 to 8,

- measuring (306) a differential voltage V_{MR} between the voltage terminals of the first pair by using a voltage measurement device connected between the first and second voltage terminals, while keeping disconnected the first pair of current terminals of the magnetic field receiver, the first pair of voltage terminals of the magnetic field receiver, and the second pair of current terminals of the first magnetic field transmitter so that the impedance between the first pair of current terminals, the impedance between the first pair of voltage terminals, the impedance between the second pair of current terminals are representative of an open circuit;

- determining (308) a local magnitude and/or variation of a time varying magnetic field generated remotely or closely by one or several magnetic source(s) on the basis of the measured differential voltage.

14. A magnetic measuring method for measuring local magnitude and/or variation of a magnetic field generated closely by one or several magnetic source(s),

the magnetic measuring method comprising the steps of :

- providing (354) a magnetic hybrid AMR/PHR based sensing device comprising a magnetic field receiver and a first magnetic field transmitter as defined in any of claims 1 to 8,

- injecting (356) a bias DC and/or AC current in the second magnetic track of the first magnetic field transmitter by using an electrical bias current source connected between the third and fourth current terminals of the first magnetic field transmitter, and

- driving (358) a set of one or several magnetic particles sensitive to a magnetic field in the vicinity or in contact of an active area of the magnetic receiver located under the magnetic track of the first magnetic field transmitter; then

- measuring (360) a differential voltage V_{MR} between the first and second voltage terminals of the magnetic field receiver by using a voltage measurement device connected between the first and second voltage terminals, while keeping disconnected the first pair of current terminals of the magnetic field receiver and the second pair of voltage terminals of the first magnetic field transmitter so that the impedance between the first pair of current terminals, and the impedance between the second pair of voltage terminals are representative of an open circuit;

- determining (362) a local magnitude and/or variation of a time varying magnetic field generated closely by the magnetic particles on the basis of the measured differential voltage.

15. A magnetic measuring method for measuring local magnitude and/or variation of a magnetic field generated closely by one or several magnetic source(s),

the magnetic measuring method comprising the steps of :

- providing (584) a magnetic hybrid AMR/PHR based sensing device comprising a magnetic field receiver, a first magnetic field transmitter and a second magnetic field transmitter as defined in any of claims 9 to 10,

- injecting (586) a bias DC and/or AC current in the second magnetic track of the first magnetic field transmitter and the third magnetic track of the second magnetic field transmitter by using an electrical bias current source connected between the third and fourth current terminals of the first magnetic field transmitter and between the fifth and the sixth current terminals of the second magnetic field transmitter so that the excitation magnetic fields generated by the first magnetic field transmitter and the second magnetic field transmitter are polarized on opposite direction, and

- driving (588) a set of one or several magnetic particles sensitive to a magnetic field in the vicinity or in contact of an active area of the magnetic receiver located under the magnetic track of the first magnetic field transmitter; then

- measuring (590) a differential voltage V_{MR} between the first and second voltage terminals of the magnetic field receiver by using a voltage measurement device connected between the first and second voltage terminals, while keeping disconnected the first pair of current terminals of the magnetic field receiver and the second pair of voltage terminals of the first magnetic field transmitter so that the impedance between the first pair of current terminals, and the impedance between the second pair of voltage terminals are representative of an open circuit;

- determining (592) a local magnitude and/or variation of a time varying magnetic field generated closely by the magnetic particles on the basis of the measured differential voltage.

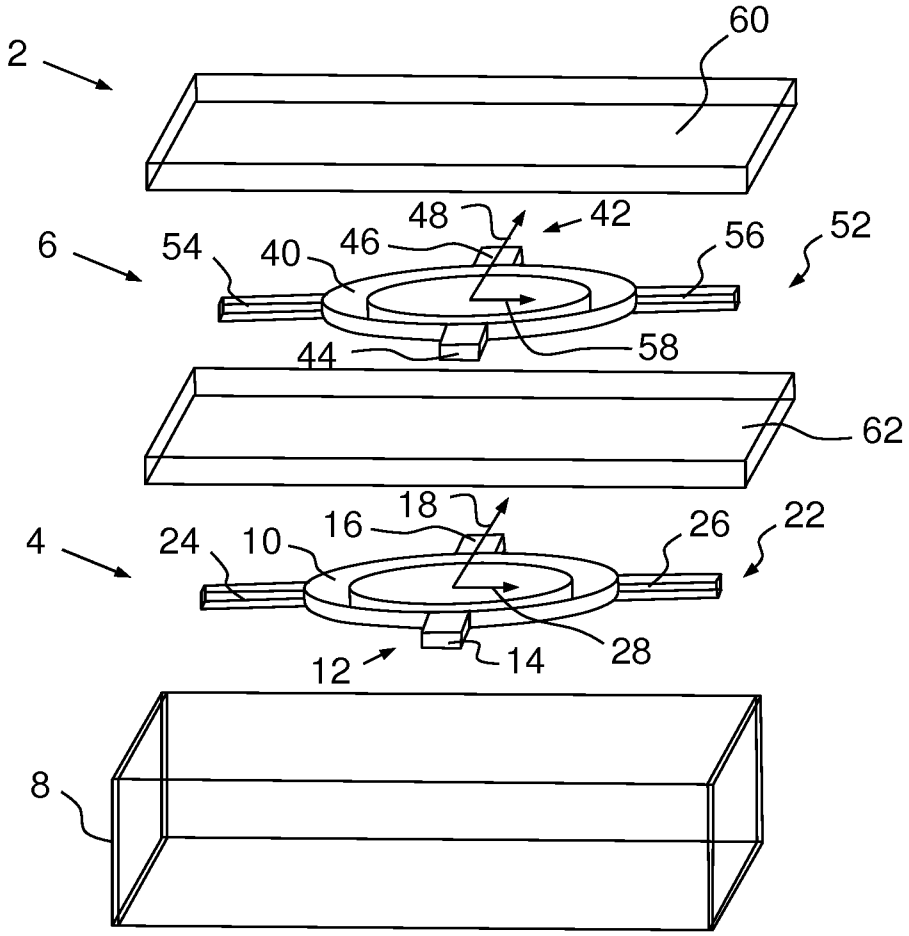
2
60
6
54
40
46
48
42
56
52
44
58
62
4
24
10
16
18
26
22
12
14
28
8

FIG.1A

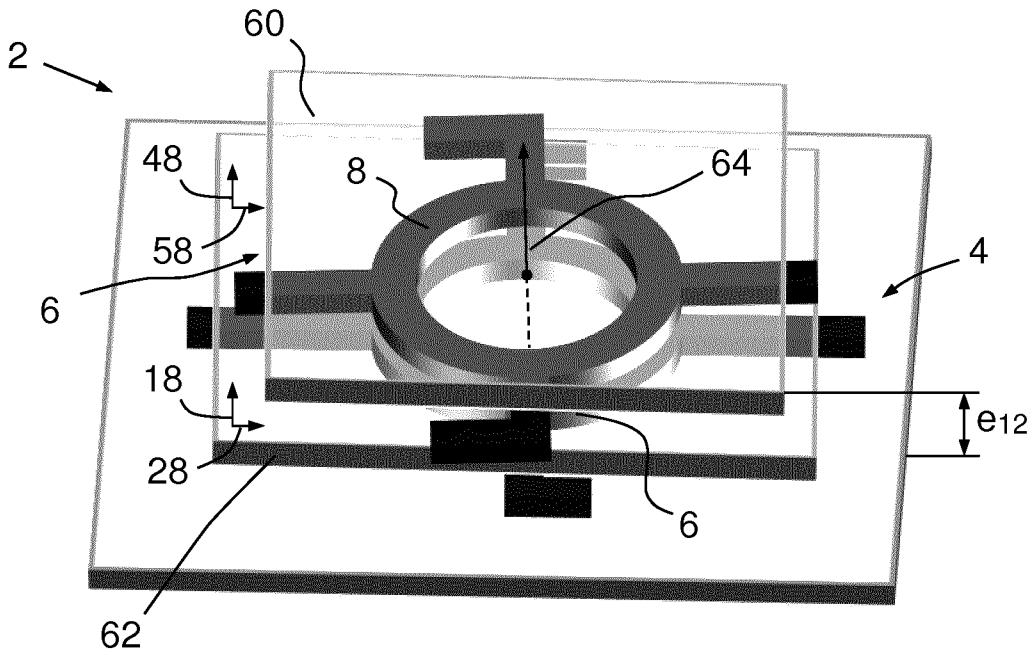
2
60
48
58
6
8
64
4
18
28
62
6
e12

FIG.1B

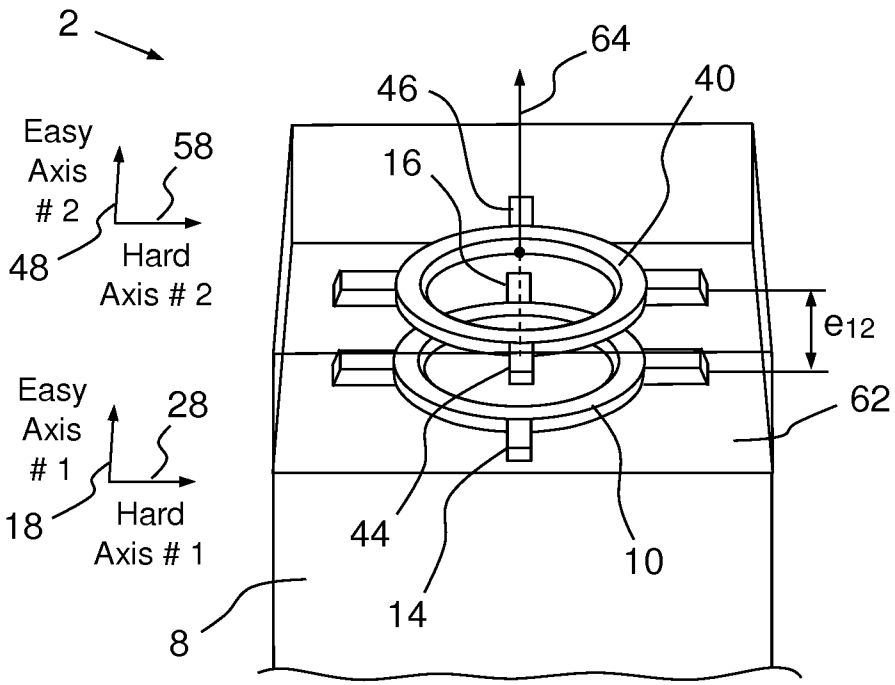
2
64
46
40
Easy
Axis
2
58
16
48
Hard
Axis # 2
e12
Easy
Axis
1
28
62
18
Hard
Axis # 1
44
10
14
8

FIG.1C

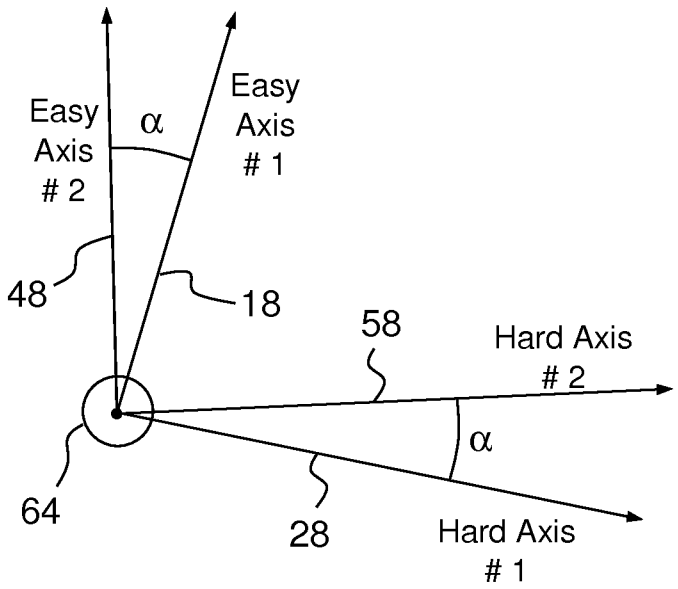
Easy
Axis
2
α
Easy
Axis
1
48
18
58
Hard Axis
2
α
64
28
Hard Axis
1

FIG.1D

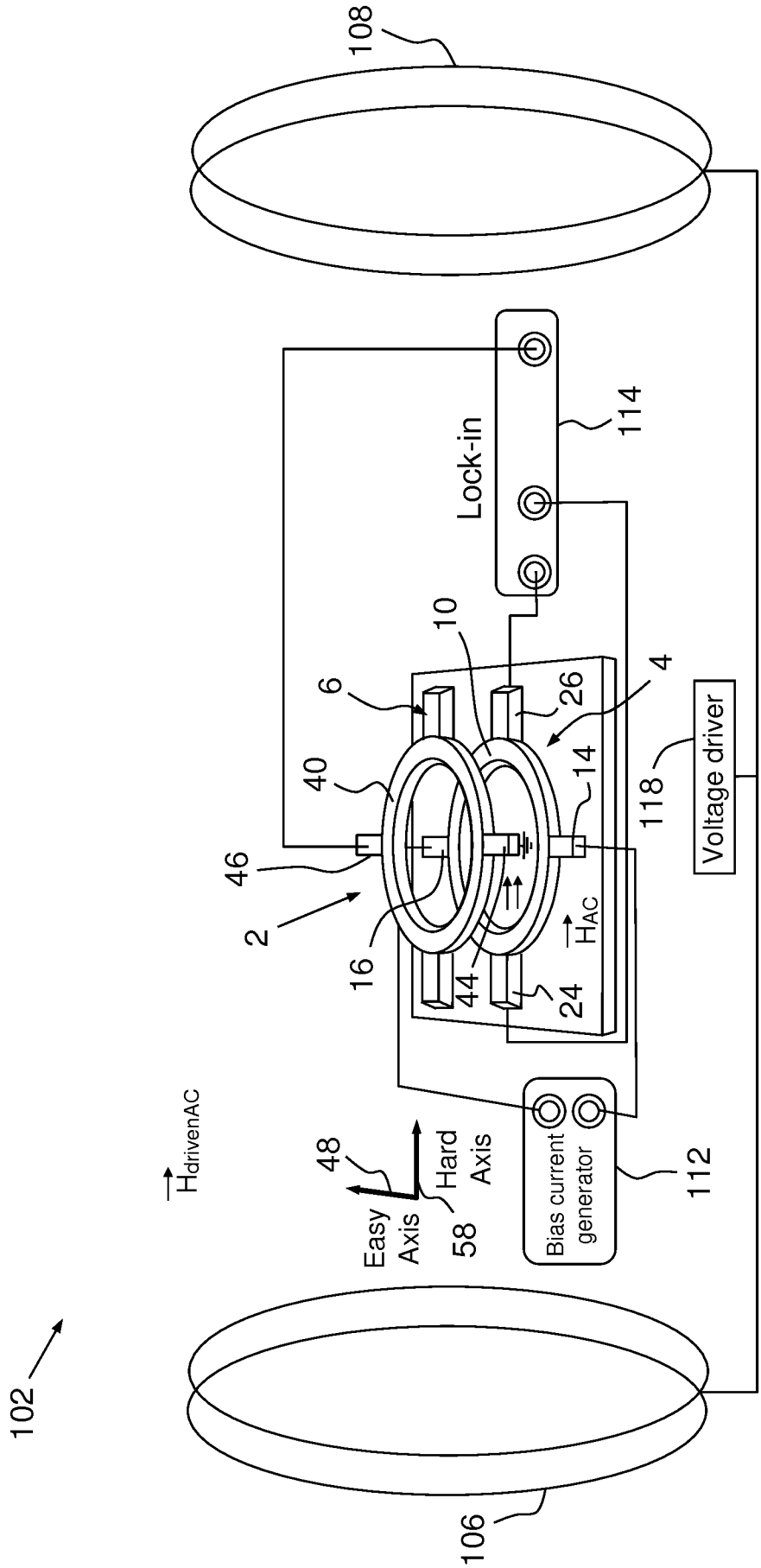
102
108
106
Lock-in
114
Voltage driver
118
Bias current generator
112
$\vec{H}_{drivenAC}$
$\vec{H}_{AC}$
Easy Axis
Hard Axis
48
58
2
4
6
10
14
16
24
26
40
44
46

FIG.2A

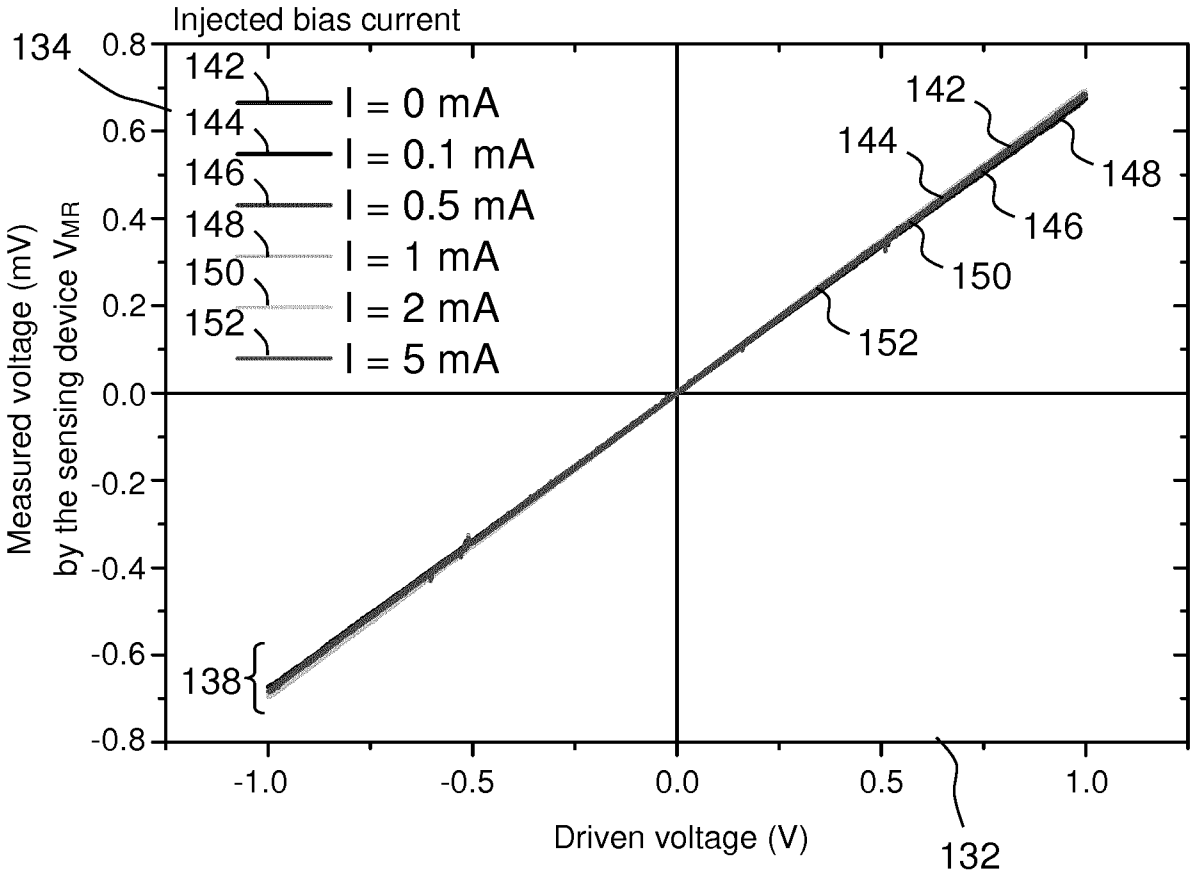
Injected bias current
134
142
144
146
148
150
152
I = 0 mA
I = 0.1 mA
I = 0.5 mA
I = 1 mA
I = 2 mA
I = 5 mA
138
Measured voltage (mV)
by the sensing device V_{MR}
Driven voltage (V)
132
0.8
0.6
0.4
0.2
0.0
-0.2
-0.4
-0.6
-0.8
-1.0
-0.5
0.0
0.5
1.0

FIG.2B

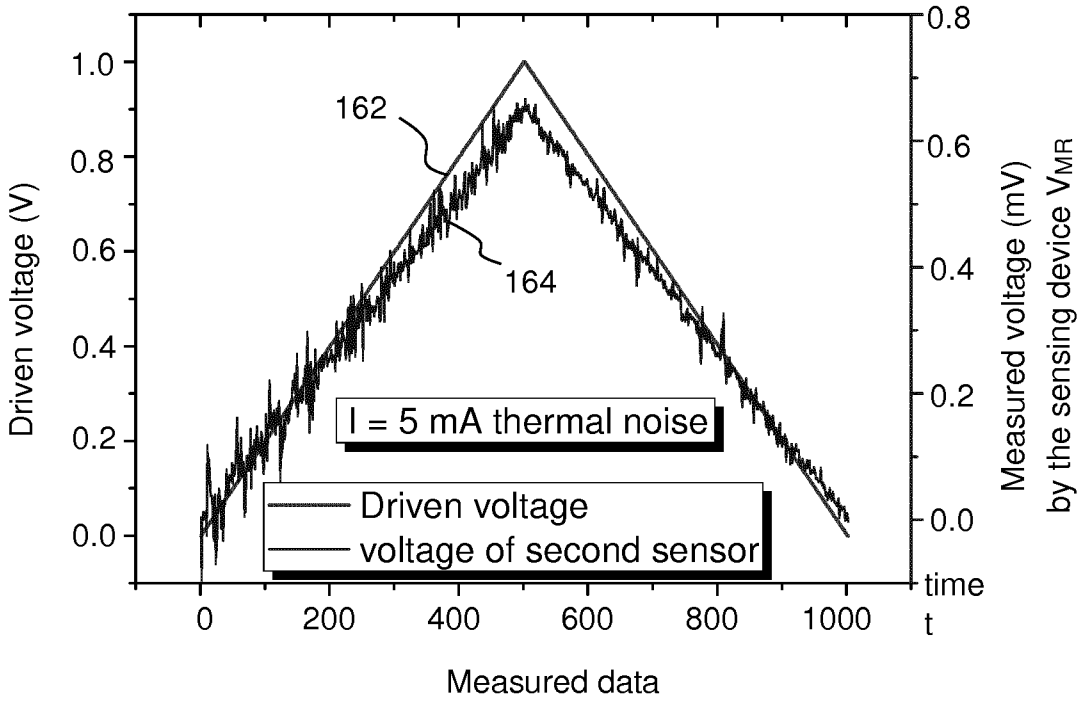
162
164
I = 5 mA thermal noise
Driven voltage
voltage of second sensor
Driven voltage (V)
Measured voltage (mV)
by the sensing device V_{MR}
time
t
Measured data
0
200
400
600
800
1000
1.0
0.8
0.6
0.4
0.2
0.0

FIG.2C

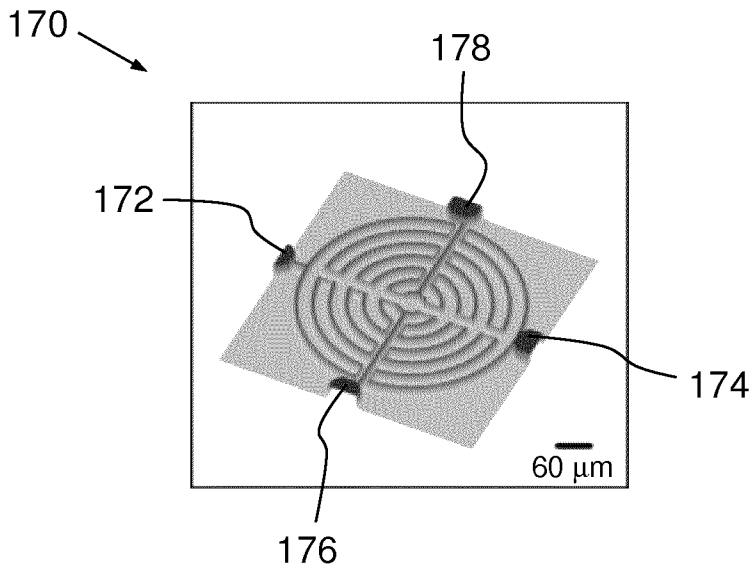

FIG.3A

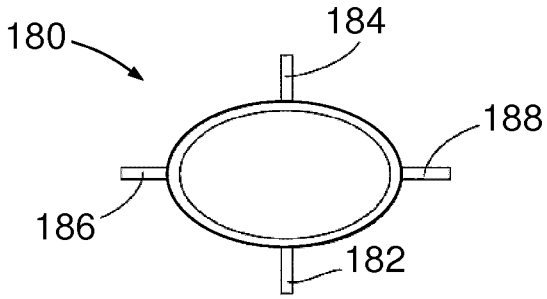

FIG.3B

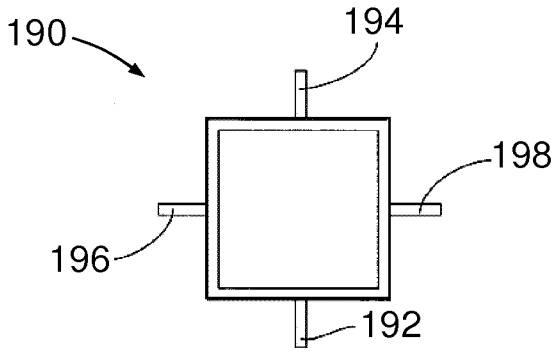

FIG.3C

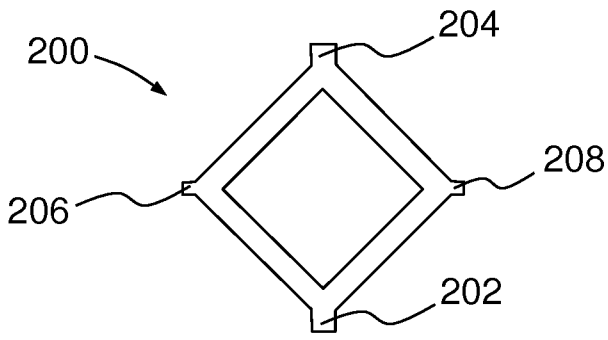

FIG.3D

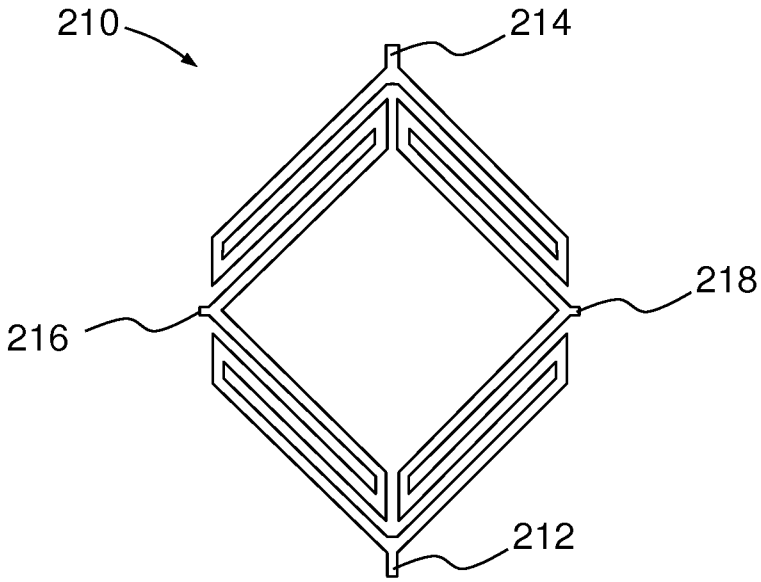

FIG.3E

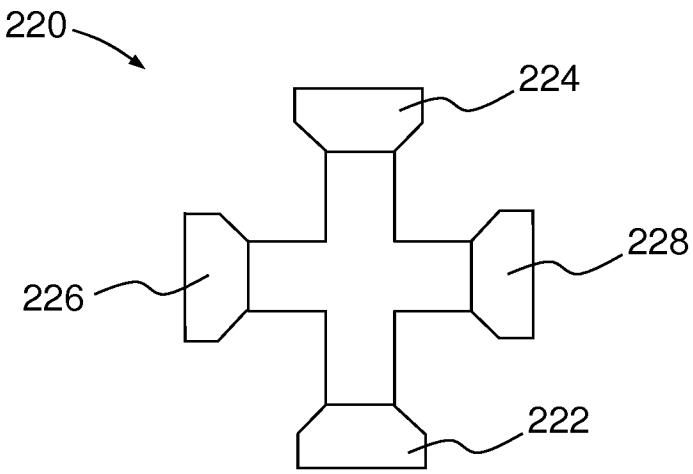

FIG.3F

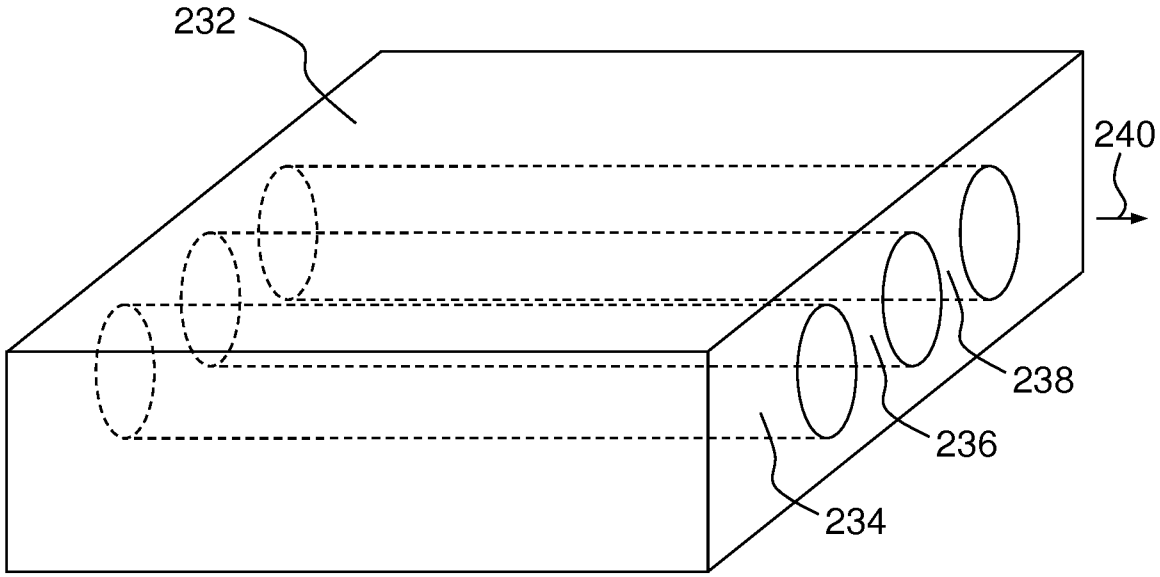

FIG.4A

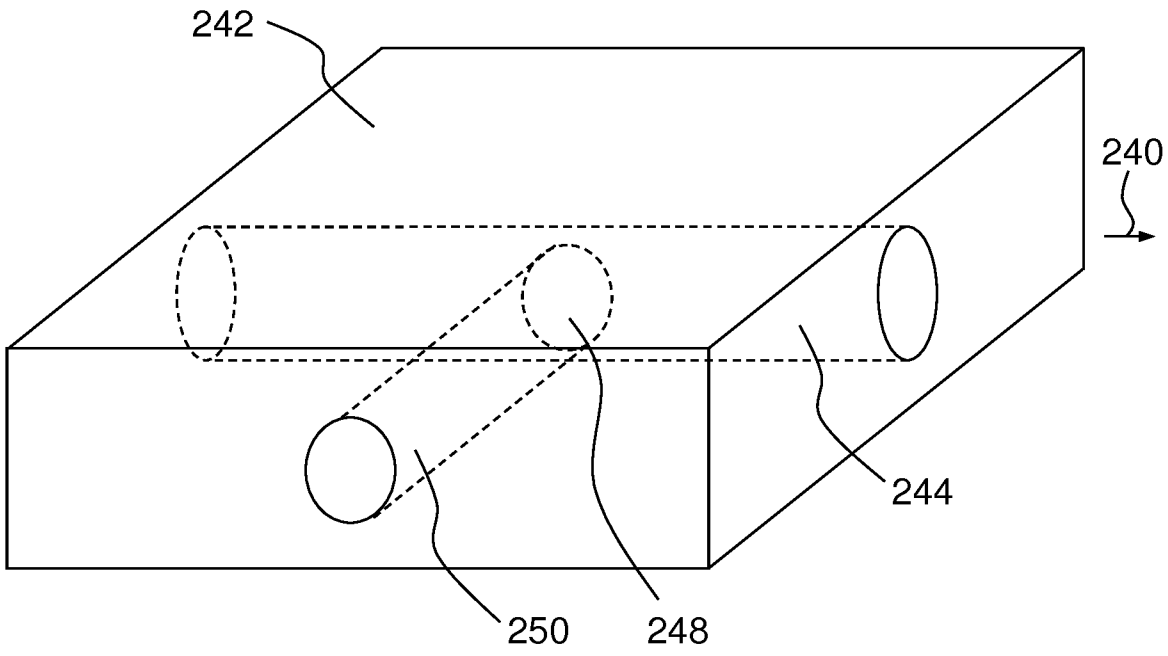

FIG.4B

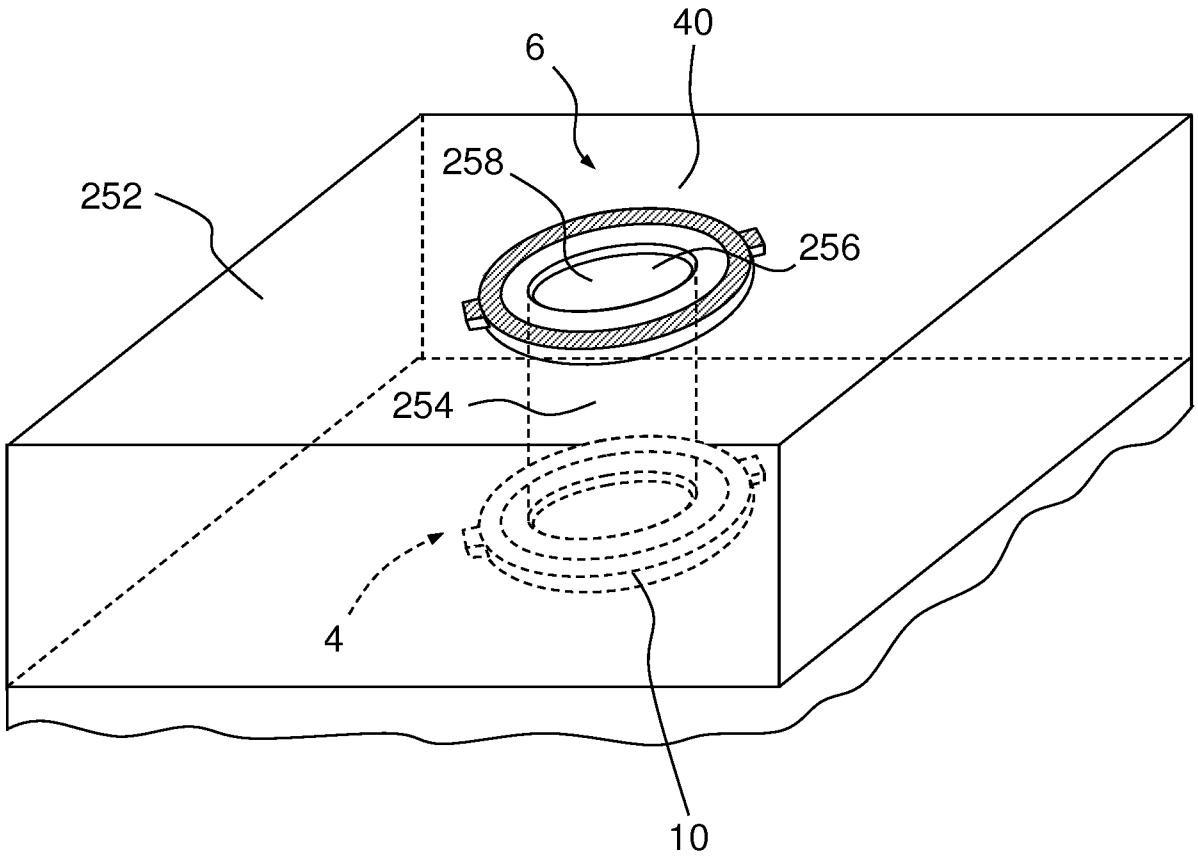

FIG.4C

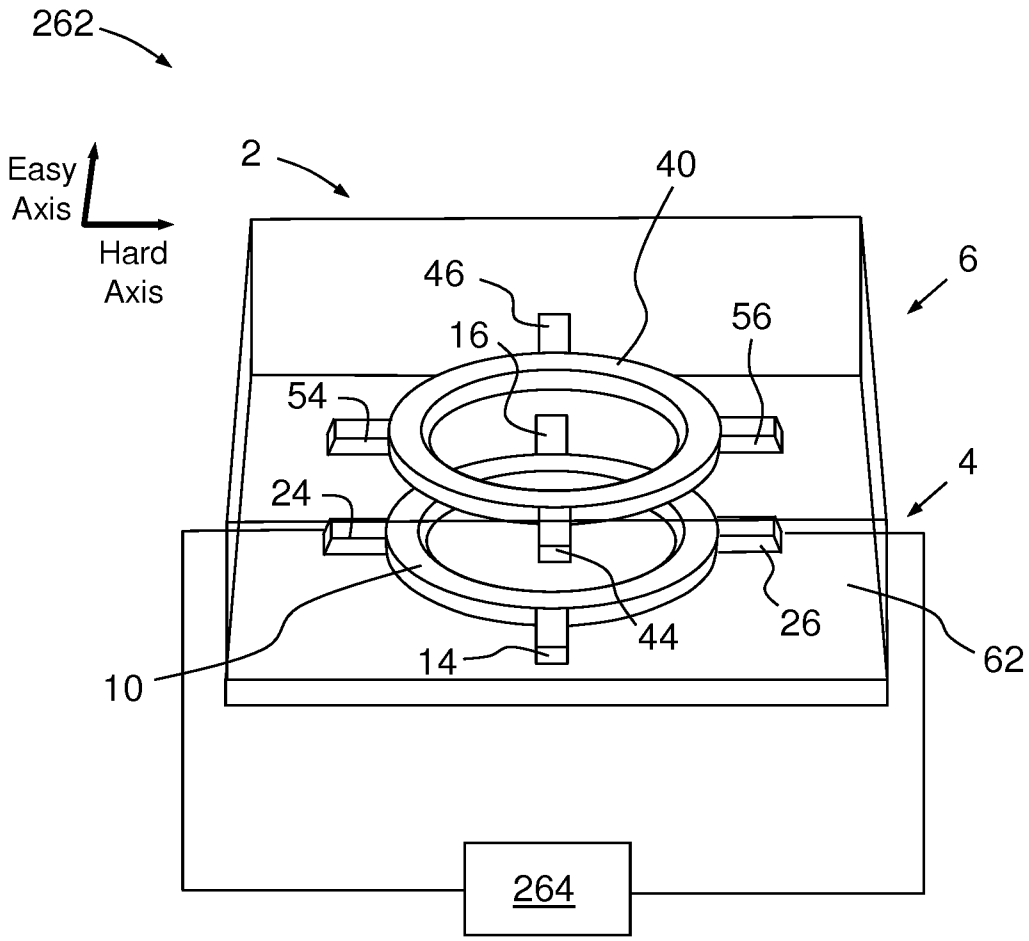
262
Easy Axis
Hard Axis
2
40
6
46
16
56
54
4
24
44
26
62
10
14
264

FIG.5A

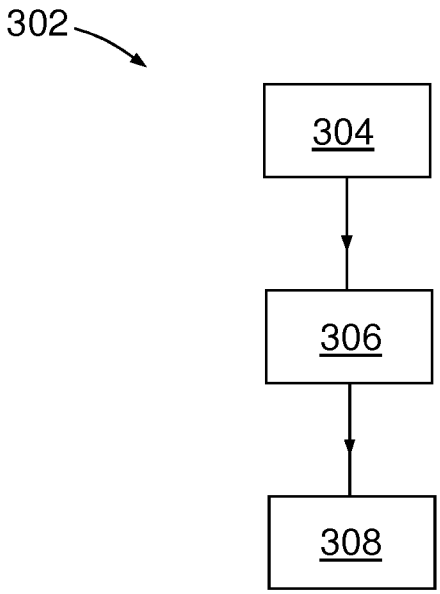
302
304
306
308

FIG.5B

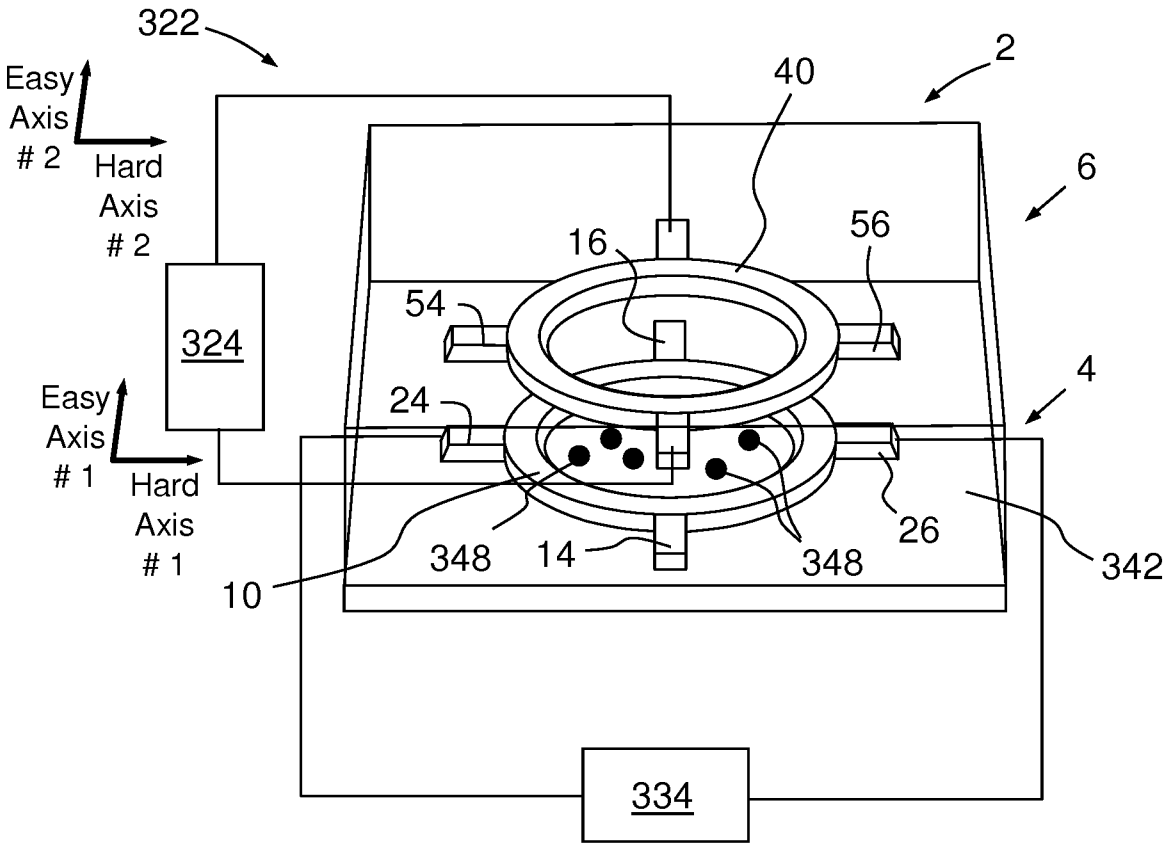
322
Easy Axis # 2
Hard Axis # 2
324
Easy Axis # 1
Hard Axis # 1
2
40
6
16
56
54
4
24
26
342
348
14
348
10
334

FIG.6A

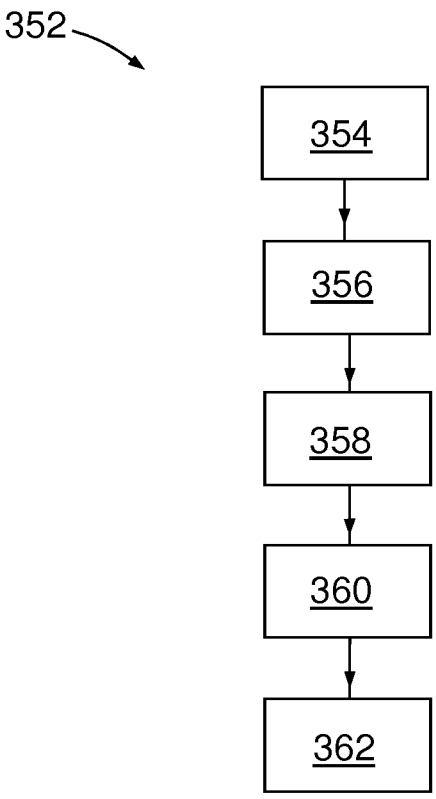
352
354
356
358
360
362

FIG.6B

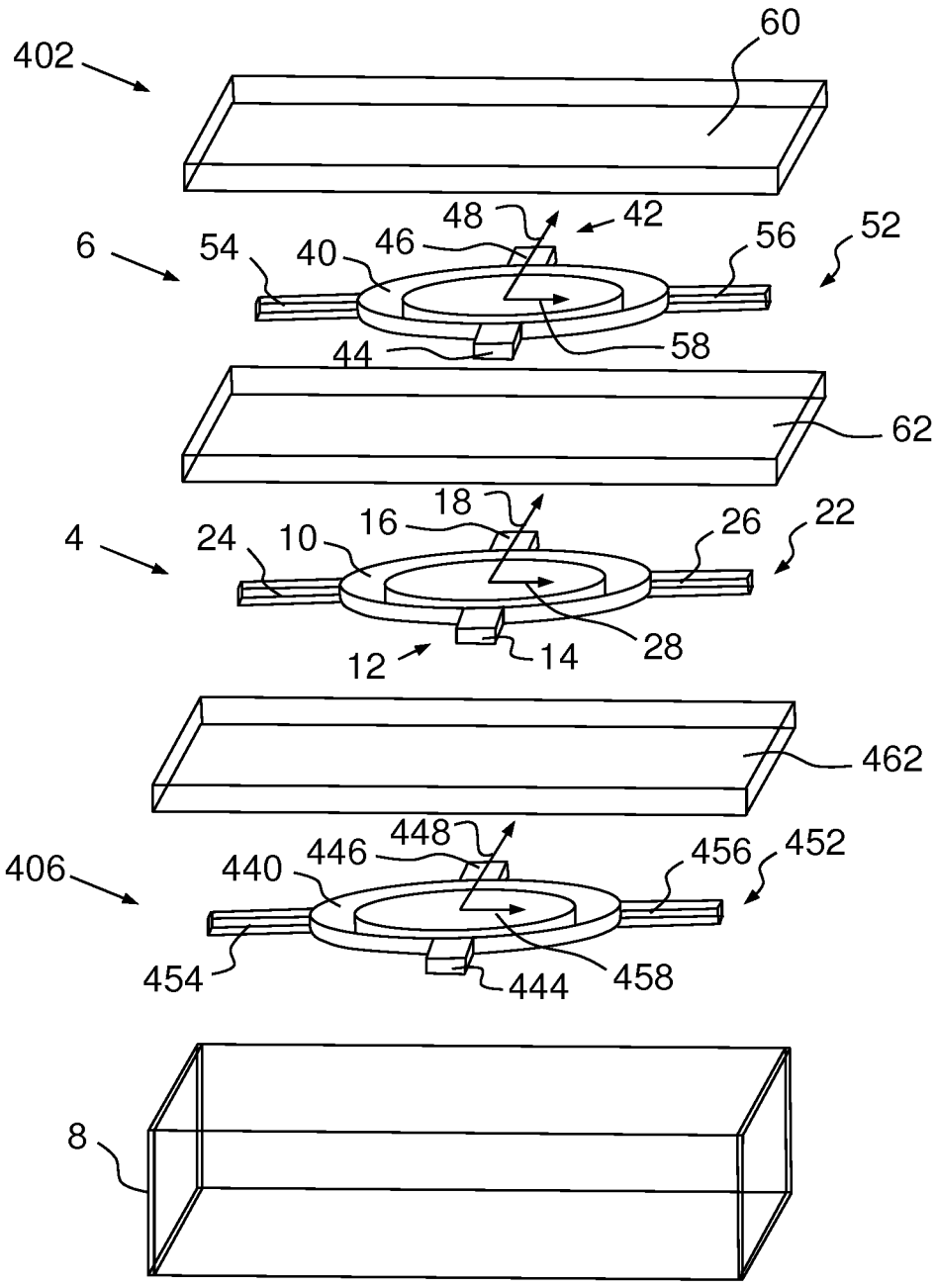
402
60
6
54
40
46
48
42
56
52
44
58
62
4
24
10
16
18
26
22
12
14
28
462
406
440
446
448
456
452
454
444
458
8

FIG.7A

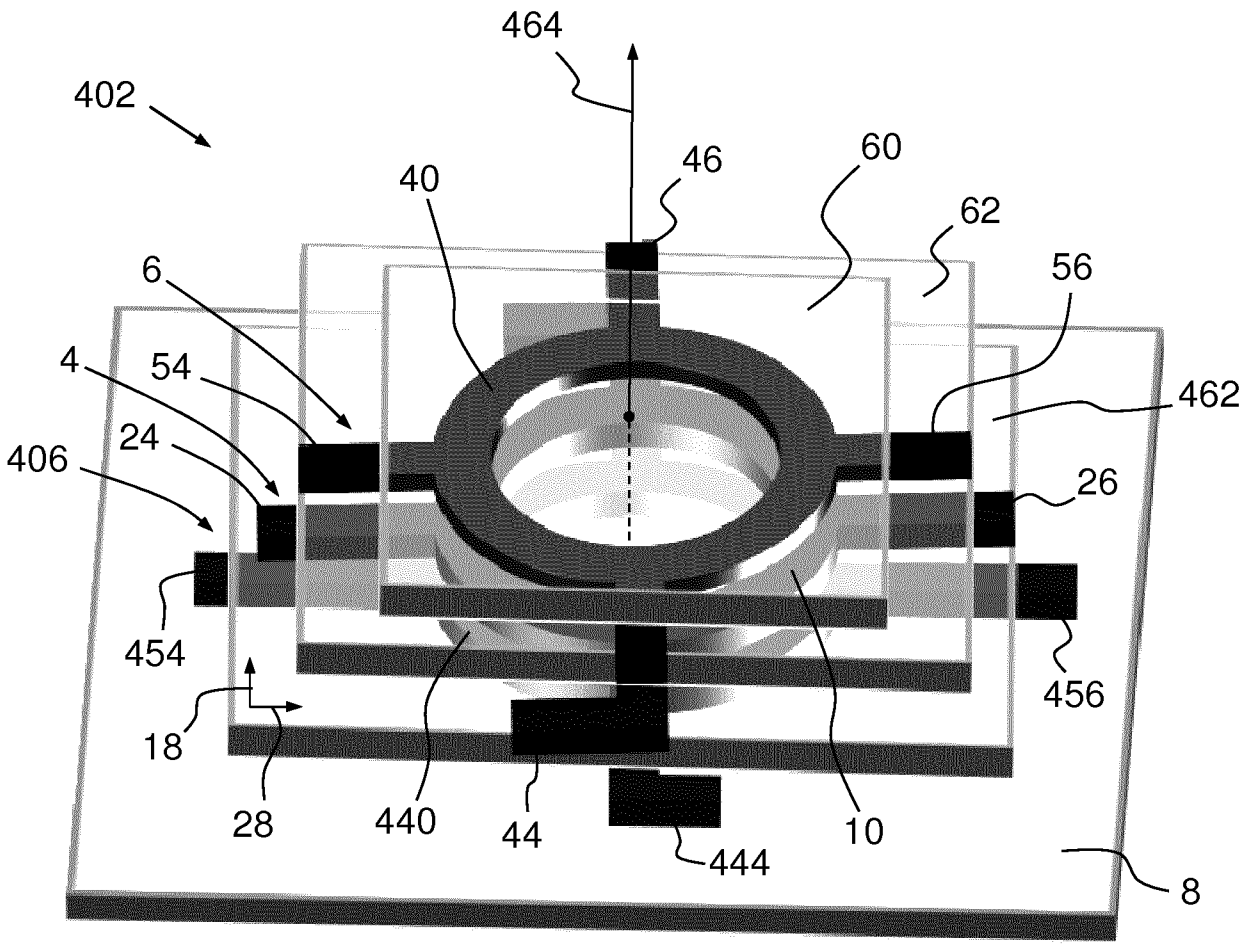
464
402
46
60
40
62
6
56
4
54
462
24
406
26
454
456
18
28
440
44
444
10
8

FIG.7B

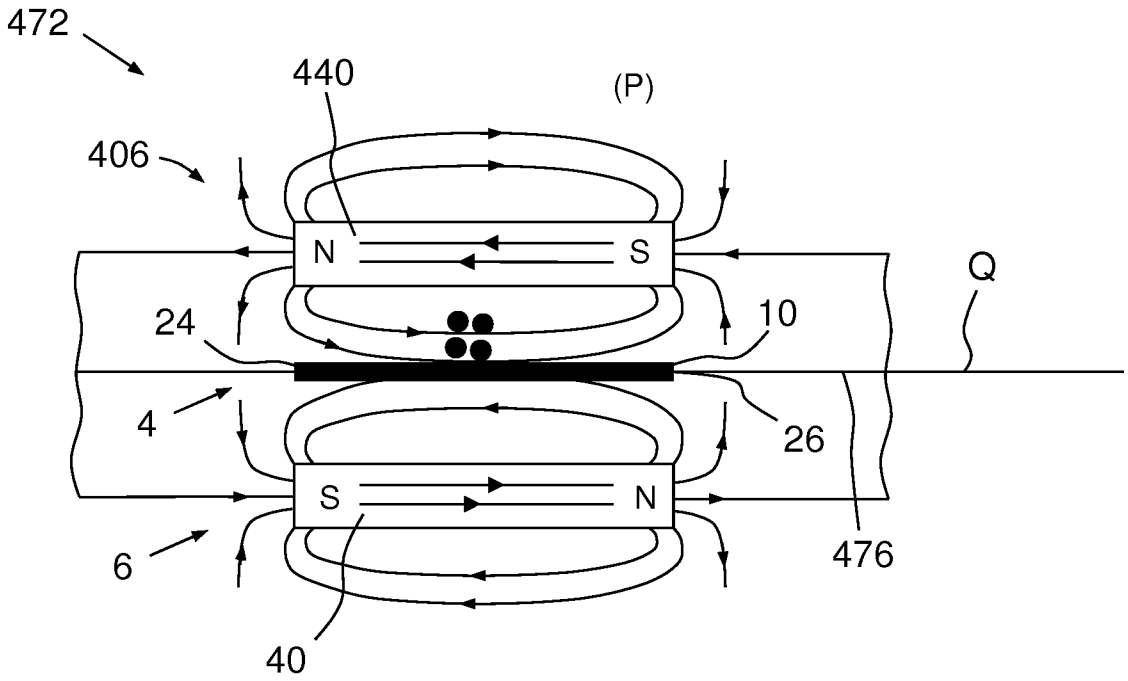
472
440
(P)
406
N
S
Q
24
10
4
26
S
N
6
476
40

FIG.8

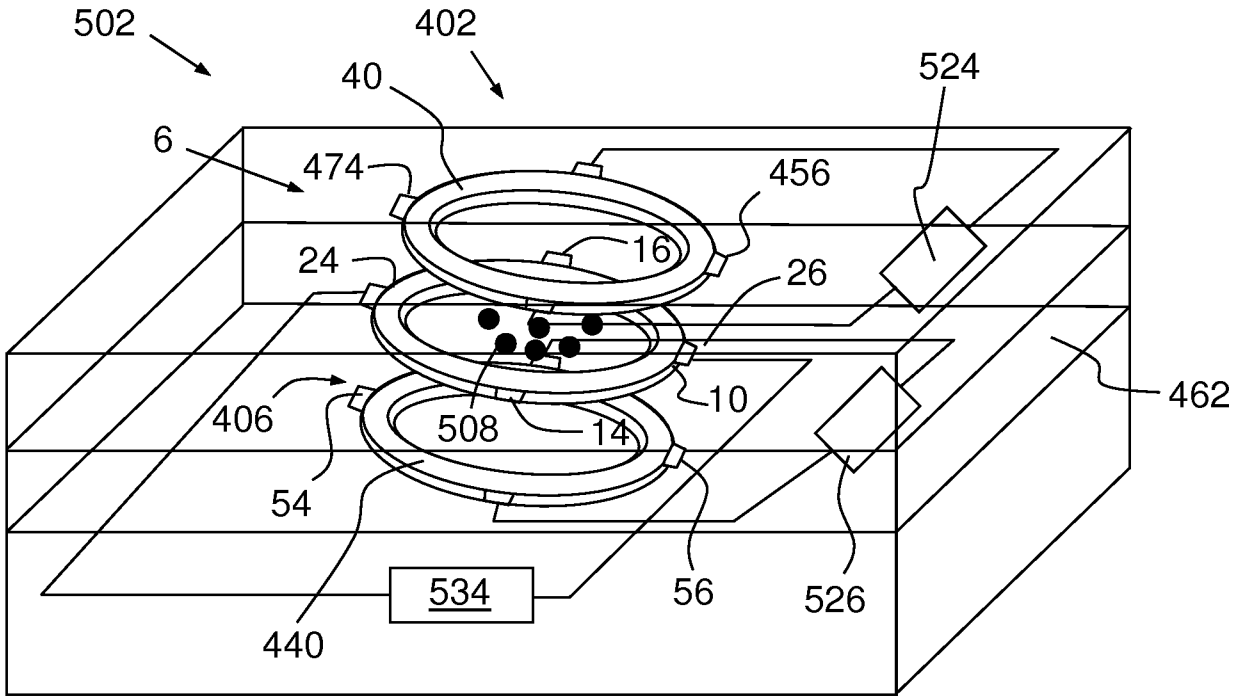
502
402
40
524
6
474
456
16
24
26
462
406
508
14
10
54
534
56
526
440

FIG.9A

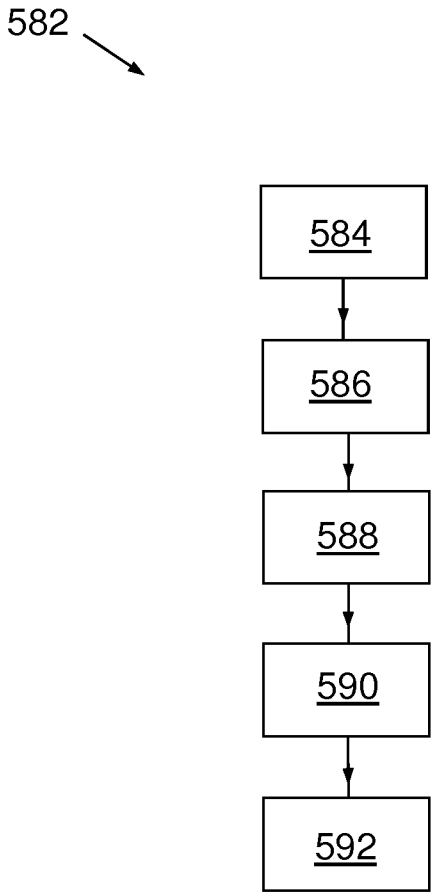

FIG.9B

INTERNATIONAL SEARCH REPORT

International application No
PCT/EP2018/066559

A. CLASSIFICATION OF SUBJECT MATTER
INV. G01R33/09 G01R33/07
ADD.

According to International Patent Classification (IPC) or to both national classification and IPC

B. FIELDS SEARCHED

Minimum documentation searched (classification system followed by classification symbols)
G01R

Documentation searched other than minimum documentation to the extent that such documents are included in the fields searched

Electronic data base consulted during the international search (name of data base and, where practicable, search terms used)
EPO-Internal, WPI Data, INSPEC

C. DOCUMENTS CONSIDERED TO BE RELEVANT

Category*	Citation of document, with indication, where appropriate, of the relevant passages	Relevant to claim No.
A	US 2015/168507 A1 (TERKI FÉRIAL [FR] ET AL) 18 June 2015 (2015-06-18) abstract; figures 1,7 paragraph [0140] - paragraph [0148] paragraph [0234] - paragraph [0249] -----	1-15
A	US 2011/175605 A1 (KIM CHEOLGI [KR] ET AL) 21 July 2011 (2011-07-21) abstract; figures -----	1-15

-/--

[X] Further documents are listed in the continuation of Box C.

[X] See patent family annex.

* Special categories of cited documents :

"A" document defining the general state of the art which is not considered to be of particular relevance

"E" earlier application or patent but published on or after the international filing date

"L" document which may throw doubts on priority claim(s) or which is cited to establish the publication date of another citation or other special reason (as specified)

"O" document referring to an oral disclosure, use, exhibition or other means

"P" document published prior to the international filing date but later than the priority date claimed

"T" later document published after the international filing date or priority date and not in conflict with the application but cited to understand the principle or theory underlying the invention

"X" document of particular relevance; the claimed invention cannot be considered novel or cannot be considered to involve an inventive step when the document is taken alone

"Y" document of particular relevance; the claimed invention cannot be considered to involve an inventive step when the document is combined with one or more other such documents, such combination being obvious to a person skilled in the art

"&" document member of the same patent family

Date of the actual completion of the international search	Date of mailing of the international search report
21 September 2018	08/10/2018

Name and mailing address of the ISA/	Authorized officer
European Patent Office, P.B. 5818 Patentlaan 2 NL - 2280 HV Rijswijk Tel. (+31-70) 340-2040, Fax: (+31-70) 340-3016	Böhm-Pélissier, A

2

Form PCT/ISA/210 (second sheet) (April 2005)

C(Continuation). DOCUMENTS CONSIDERED TO BE RELEVANT

Category*	Citation of document, with indication, where appropriate, of the relevant passages	Relevant to claim No.
A	SUNJONG OH ET AL: "Hybrid AMR/PHR ring sensor", SOLID STATE COMMUNICATIONS, PERGAMON, GB, vol. 151, no. 18, 1 September 2011 (2011-09-01), pages 1248-1251, XP028251303, ISSN: 0038-1098, DOI: 10.1016/J.SSC.2011.05.049 [retrieved on 2011-06-12] abstract; figures -----	1-15
A	SINHA BRAJALAL ET AL: "Planar Hall resistance ring sensor based on NiFe/Cu/IrMn trilayer structure", JOURNAL OF APPLIED PHYSICS, AMERICAN INSTITUTE OF PHYSICS, US, vol. 113, no. 6, 14 February 2013 (2013-02-14), pages 63903-63903, XP012169936, ISSN: 0021-8979, DOI: 10.1063/1.4790139 [retrieved on 2013-02-08] abstract; figures -----	1-15

INTERNATIONAL SEARCH REPORT

Information on patent family members

International application No
PCT/EP2018/066559

Patent document cited in search report	Publication date	Patent family member(s)	Publication date
US 2015168507 A1	18-06-2015	BR 112015000765 A2	27-06-2017
		CN 104969085 A	07-10-2015
		EP 2685273 A1	15-01-2014
		EP 2872911 A1	20-05-2015
		ES 2585007 T3	03-10-2016
		JP 6335894 B2	30-05-2018
		JP 2015524919 A	27-08-2015
		KR 20150083072 A	16-07-2015
		RU 2015104778 A	10-09-2016
		US 2015168507 A1	18-06-2015
		WO 2014009516 A1	16-01-2014
US 2011175605 A1	21-07-2011	KR 20110085725 A	27-07-2011
		US 2011175605 A1	21-07-2011