US00D955207S

(12) United States Design Patent

Jiao et al.

(10) Patent No.: US D955,207 S
(45) Date of Patent: ** Jun. 21, 2022

(54) **CURTAIN HOLDBACK TIE**

(71) Applicants: **Yang Jiao**, Hangzhou (CN); **Hui Yan**, Shenzhen (CN)

(72) Inventors: **Yang Jiao**, Hangzhou (CN); **Hui Yan**, Shenzhen (CN)

(**) Term: **15 Years**

(21) Appl. No.: **29/766,744**

(22) Filed: **Jan. 18, 2021**

(51) **LOC (13) Cl.** **08-05**

(52) **U.S. Cl.**
USPC **D8/367**; D8/368

(58) **Field of Classification Search**
USPC D8/367, 356, 354, 349, 18, 105, 368
CPC A45F 5/021; A44B 13/0029; F16B 45/00; F16M 13/02
See application file for complete search history.

(56) **References Cited**

U.S. PATENT DOCUMENTS

1,377,066	A *	5/1921	Garrabrant	A47H 19/00 24/1
2,365,664	A *	12/1944	Troensegaard	A47H 19/00 160/349.2
D221,056	S	7/1971	Minoff	
3,662,080	A *	5/1972	Hale	G10G 7/00 84/477 B
3,662,081	A *	5/1972	Hale	G10G 7/00 84/477 B
D225,755	S *	1/1973	Hale	D21/400
3,810,411	A *	5/1974	Schambacher	G10G 7/00 84/477 B
4,383,387	A *	5/1983	Puskar	A63B 67/086 446/236
D536,040	S *	1/2007	Orr	D21/400
D713,031	S *	9/2014	McCormick	D24/135
9,084,502	B2	7/2015	Lapadula	
D789,541	S *	6/2017	Brunst	D24/162
D813,654	S	3/2018	Erickson	
D848,246	S	5/2019	Jones	
D866,304	S	11/2019	Qi	
D891,233	S	7/2020	Yu	
D910,424	S *	2/2021	Yu	D8/368
D911,154	S *	2/2021	Jiao	D8/368
D918,022	S *	5/2021	Yu	D8/368
D924,671	S *	7/2021	Yan	D8/368
D924,672	S *	7/2021	Zhang	D8/368
2003/0106556	A1 *	6/2003	Alperovich	A62B 23/06 128/206.11

(Continued)

Primary Examiner — Patricia A Palasik
(74) *Attorney, Agent, or Firm* — Law Offices of Steven W. Weinrieb

(57) **CLAIM**

The ornamental design for a curtain holdback tie, as shown and described.

DESCRIPTION

FIG. **1** is a front, left side, top perspective view of the curtain holdback tie showing my new design;
FIG. **2** is a front elevational view thereof;
FIG. **3** is a rear elevational view thereof;
FIG. **4** is a right side elevational view thereof;
FIG. **5** is a left side elevational view thereof;
FIG. **6** is a top plan view thereof;
FIG. **7** is a bottom plan view thereof;
FIG. **8** is an enlarged detailed view of the region denoted by the No. **8** in FIG. **1**;
FIG. **9** is a top plan view thereof when the ends of the curtain holdback tie are brought together for use; and,
FIG. **10** is a top plan view thereof showing the curtain holdback tie in use in connection with curtains.
The curtain holdback tie is shown with a symbolic break in its length. The appearance of any portion of the article between the break lines forms no part of the claimed design.

1 Claim, 9 Drawing Sheets

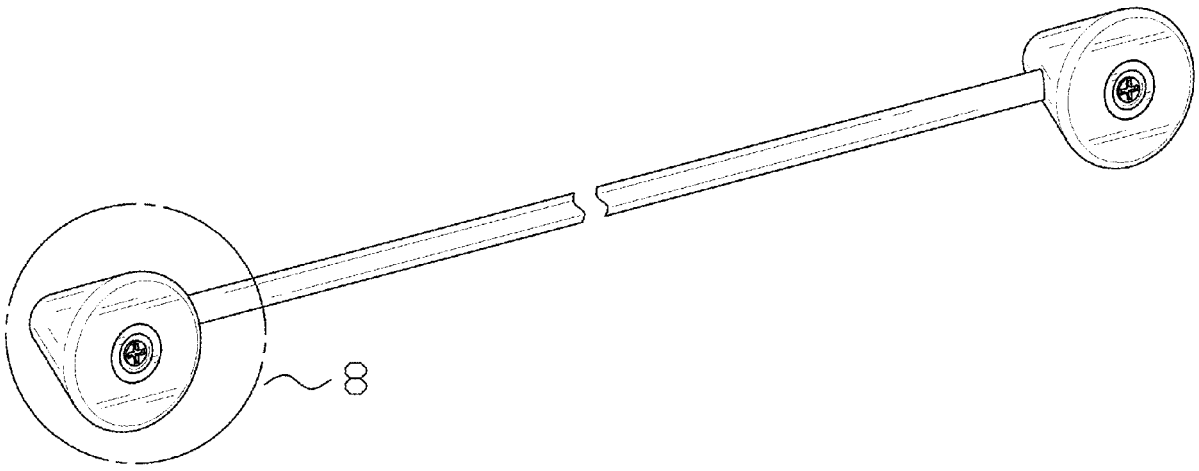

(56) **References Cited**

U.S. PATENT DOCUMENTS

2004/0065065	A1*	4/2004	Van Patten	A62B 23/06 55/385.1
2007/0193233	A1*	8/2007	Chen	A62B 23/06 55/385.1
2010/0147307	A1*	6/2010	Narciso	A62B 23/06 128/206.11
2012/0138245	A1*	6/2012	Affonso	A47H 19/00 160/349.2

* cited by examiner

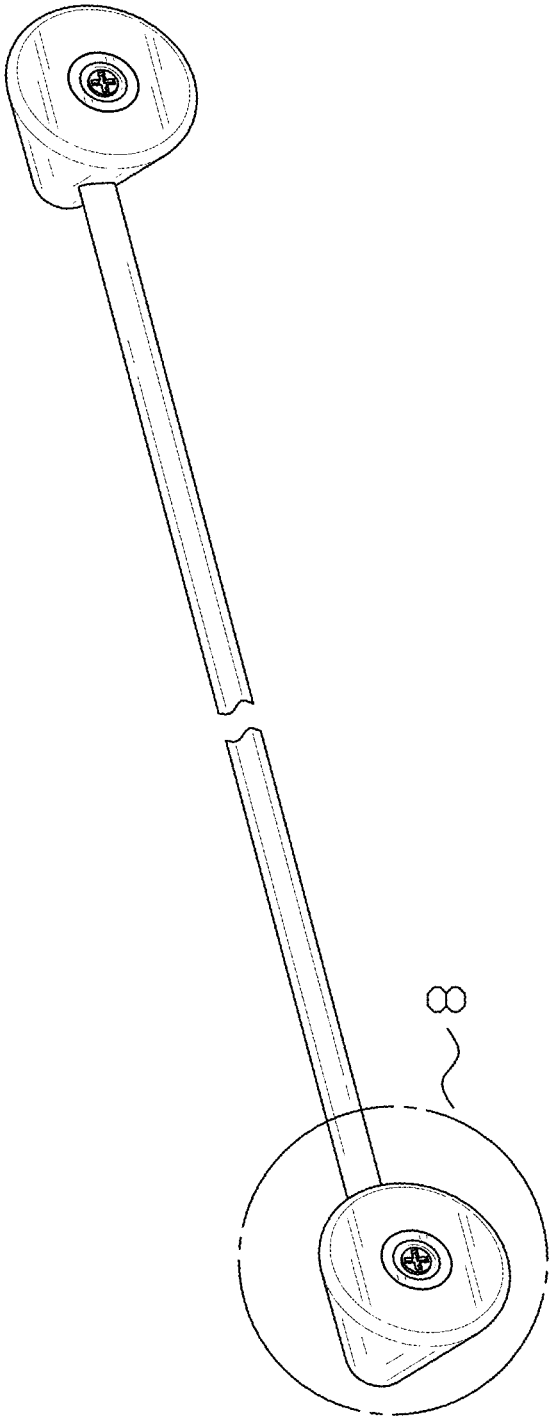

FIG.1

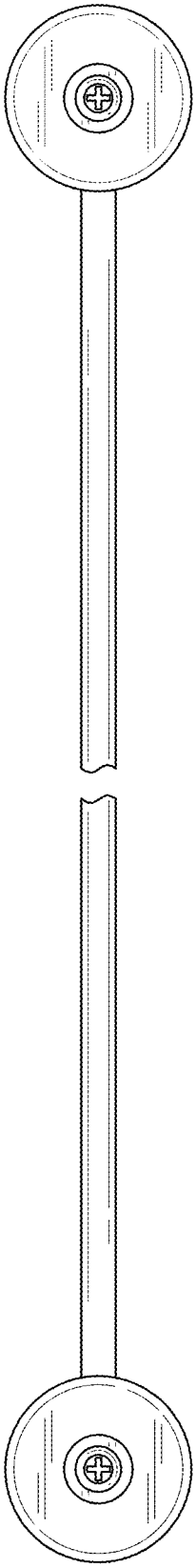

FIG.2

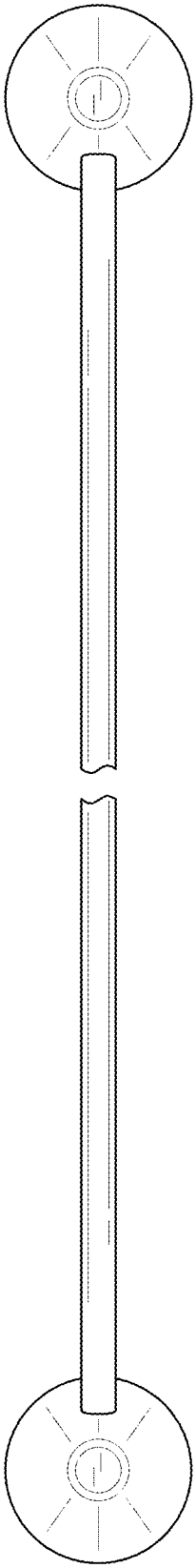

FIG.3

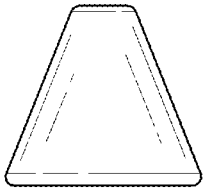

FIG.5

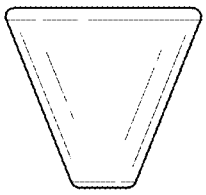

FIG.4

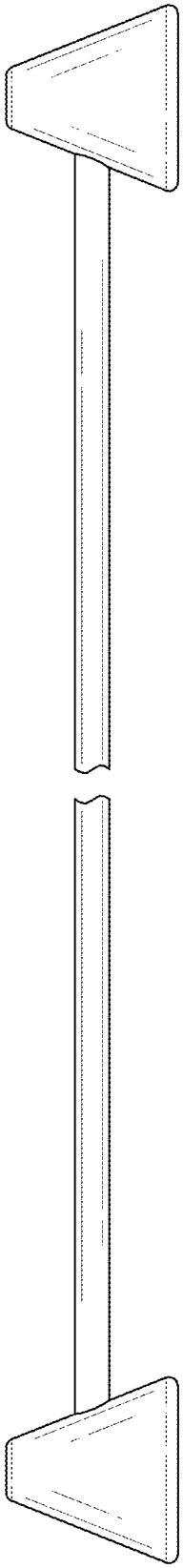

FIG.6

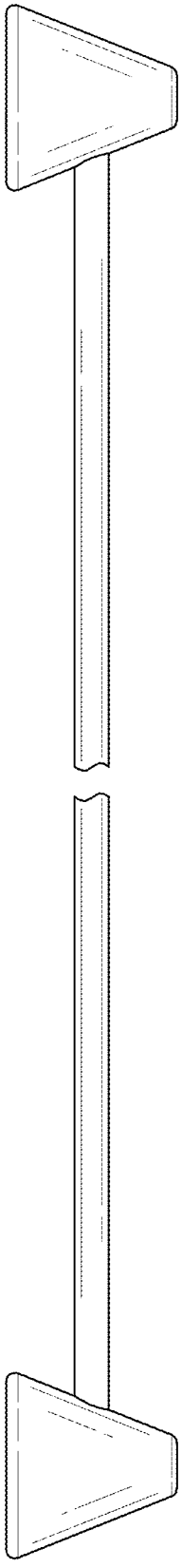

FIG. 7

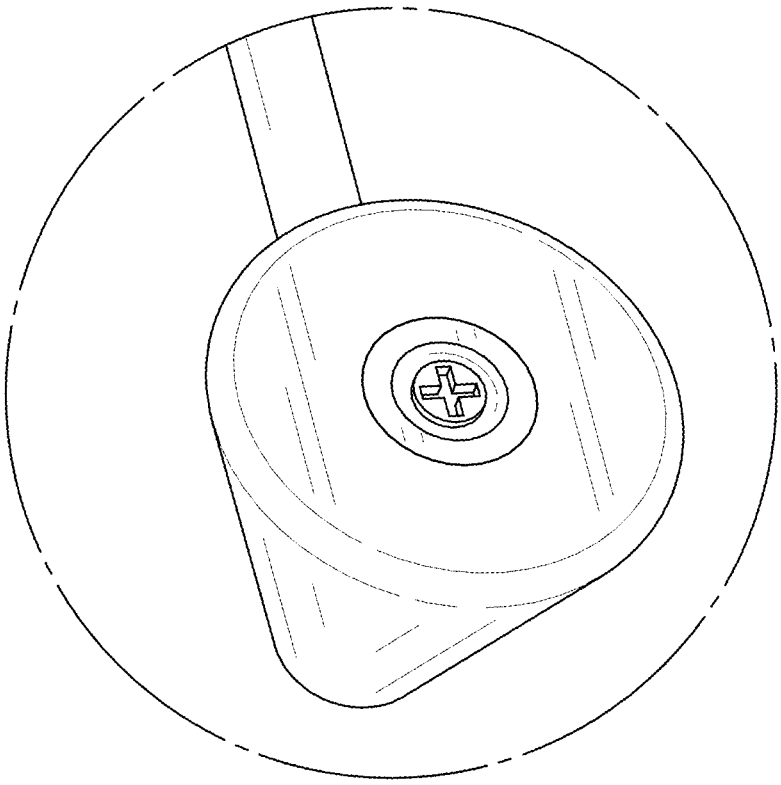

FIG.8

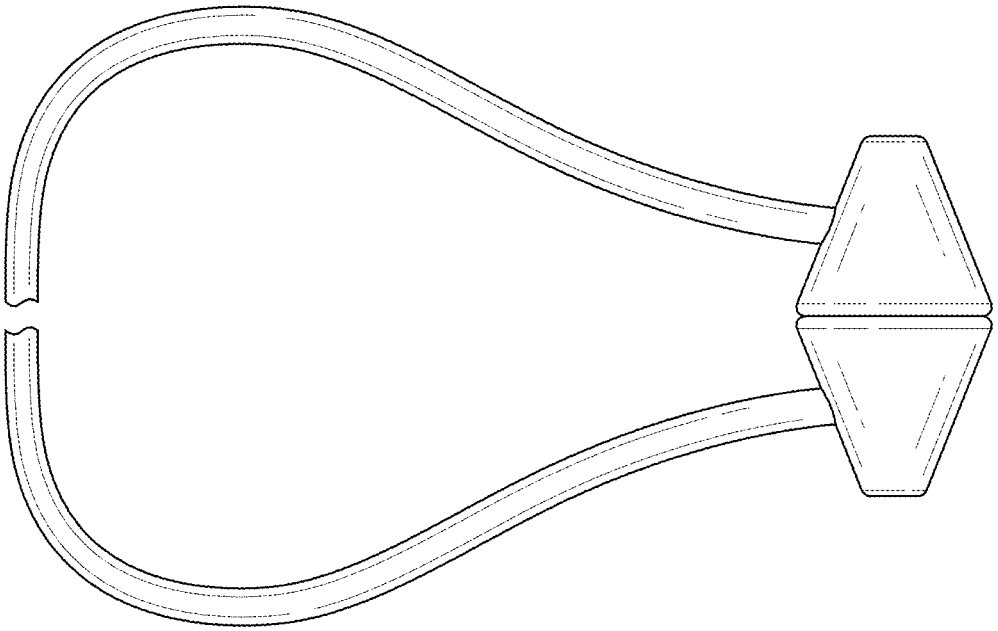

FIG.9

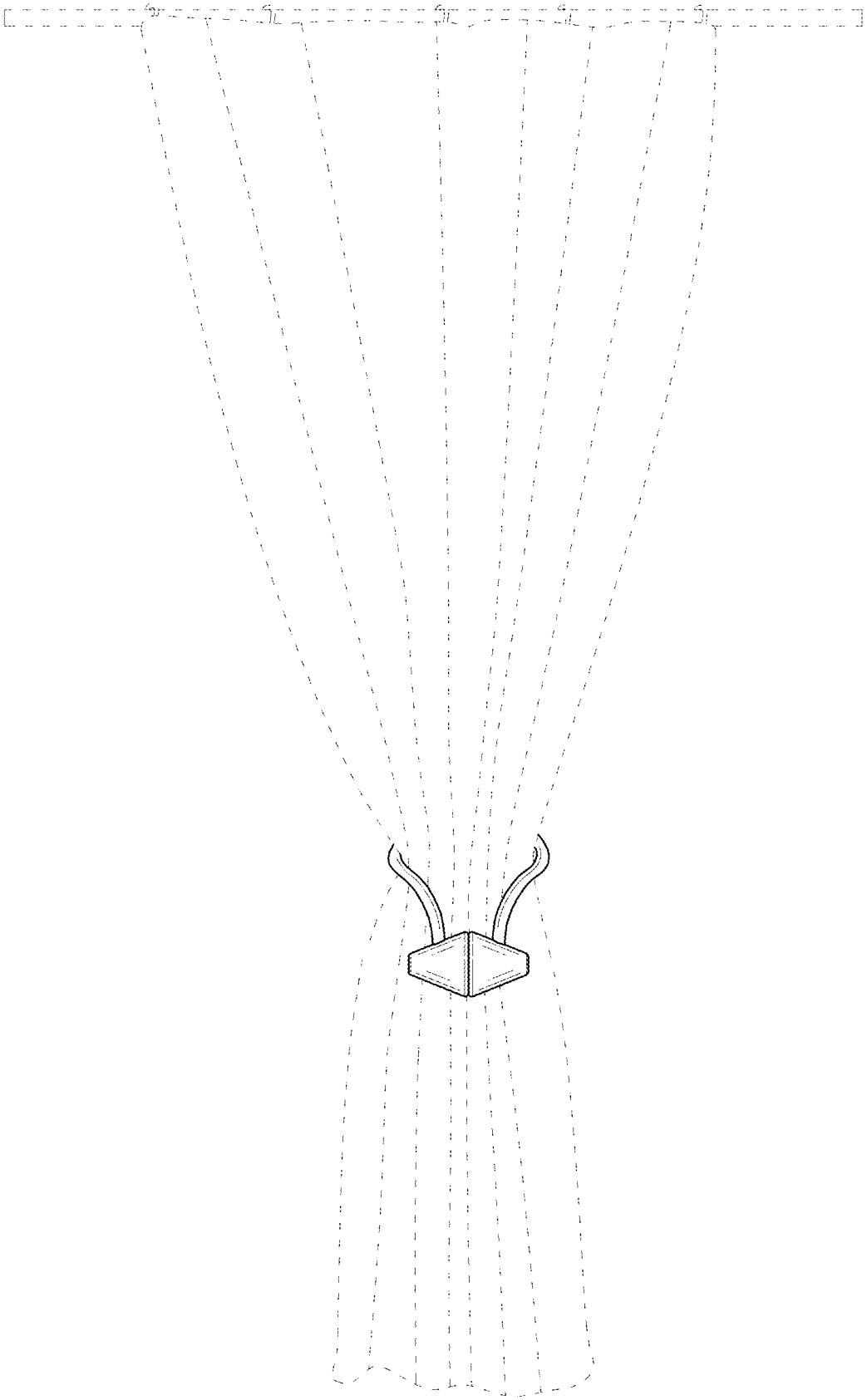

FIG.10