July 24, 1923.

1,462,913

E. B. HESS

TYPEWRITING MACHINE

Filed July 15, 1922

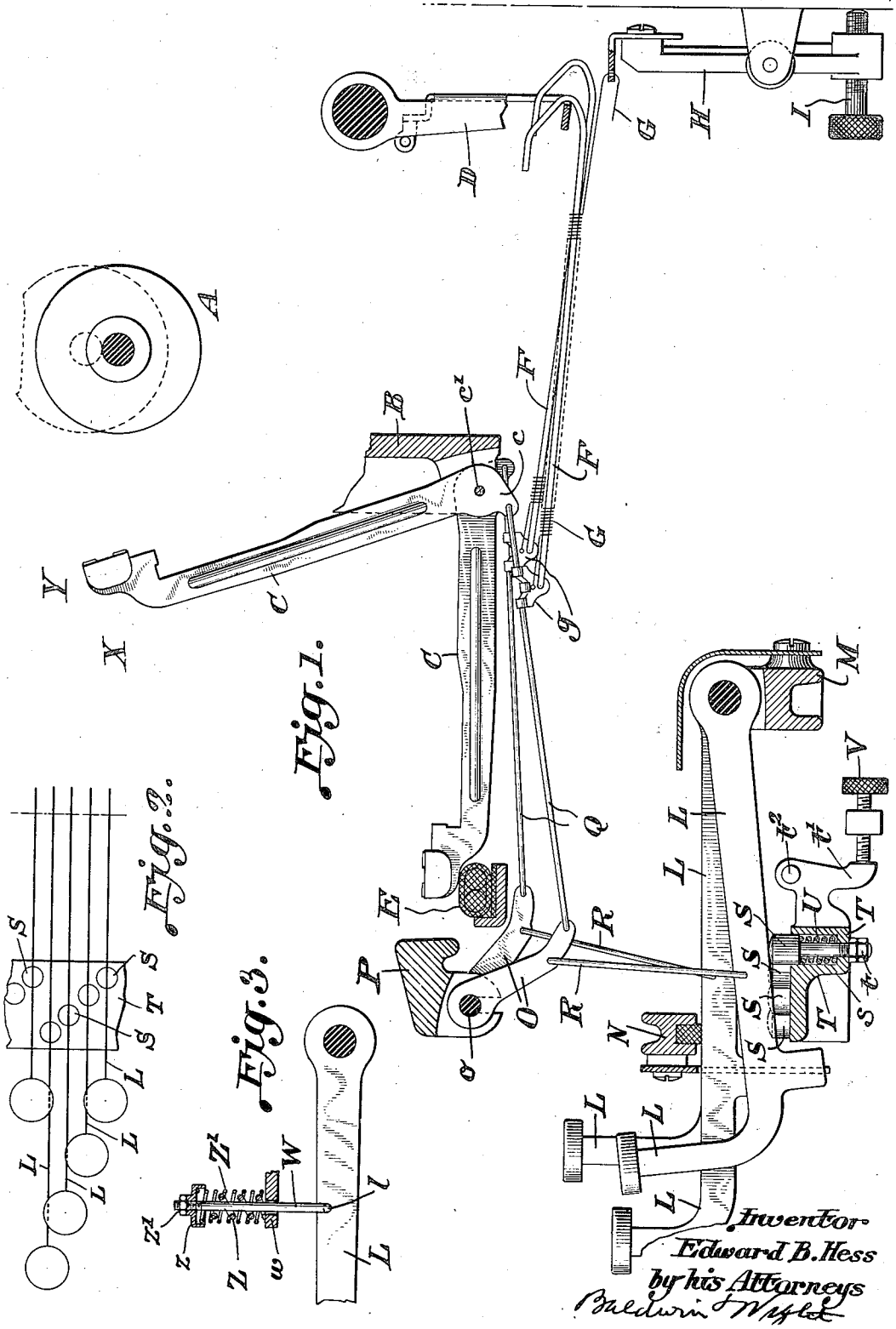

Patented July 24, 1923. 1,462,913

# UNITED STATES PATENT OFFICE.

EDWARD B. HESS, OF MANHATTAN BEACH, NEW YORK, ASSIGNOR TO ROYAL TYPEWRITER COMPANY, INC., OF NEW YORK, N. Y., A CORPORATION OF NEW YORK.

## TYPEWRITING MACHINE.

Application filed July 15, 1922. Serial No. 575,153.

*To all whom it may concern:*

Be it known that I, EDWARD B. HESS, a citizen of the United States, residing at Manhattan Beach, in the county of Kings, New York, and State of New York, have invented certain new and useful Improvements in Typewriting Machines, of which the following is a specification.

This invention relates particularly to front strike visible typewriting machines, in which the type bars are propelled to the platen by link connections between the key levers and the type bars. Such type actions are used in the standard Royal machines, in which machines they comprise toggles consisting of short front links connected to the heels of the type bars by rods or pull links and to the key levers by vertical links. These devices or flexing connections are so constructed and arranged as to propel the type bars to the platen with increasing velocity so that the speed of operation is greatly enhanced although the impact of the type bars on the platen is necessarily great, and the object of this invention is to provide novel means for reducing the force of the impact without materially decreasing the speed of operation.

To do this I have provided devices which are engaged by the key levers when they are depressed and which serve to check the movement of the key levers and the type bars before the latter reach the platen, the further movement of the type bars to the platen being caused by their momentum and by the further depression of the keys against the action of the checking devices.

The accompanying drawings show an efficient way of embodying my invention in a front strike visible machine, but other ways of carrying out the invention are contemplated.

Figure 1 is a view in side elevation of portions of a typewriting machine showing how my improvements are applied thereto.

Figure 2 is a diagram showing the arrangement of the devices for checking the movement of the key levers.

Figure 3 is a detail view of a modification.

Only such parts of a typewriting machine as are necessary to illustrate an embodiment of my invention are illustrated.

The platen is indicated at A. B indicates a type bar segment, C a type bar, and D a universal bar. The type bars are formed with heels *c* and they are pivotally mounted in the segment at *c'*. The type bars extend forwardly from their pivots as usual, their front or type carrying ends being normally supported on a cushioned type bar rest E. The key levers L are pivotally mounted at their rear ends in a support M and these levers normally rest against a cushioned stop N above them. The front links O are pivotally mounted at *o* in a support P, and each front link is connected by a rod or pull link Q with the heel of an associated type bar. Each link Q is also connected by a link R with an associated key lever in the usual way. The universal bar D is operated by links F connected to clips *g* on the pull links Q in the usual way and the type bars are returned to normal position of rest by springs G attached to the clips *g* and to a support H provided with adjusting devices I. All the before mentioned parts are of a construction shown in prior patents of the Royal Typewriter Company, Inc.

In the usual operation of the mechanism as thus far described, the type bars are propelled directly by the depression of the key levers with an accelerated movement to the platen and strike it with considerable force, which it is the object of this invention to reduce. I have provided novel devices associated with the key levers by which this accelerated movement is arrested or somewhat decreased after the key levers have been depressed to a certain extent, the further movement of the key levers being checked or resisted by yielding devices and the further movement of the type bars to the platen being caused largely by the momentum of the type bars.

In the construction shown in Figure 1, each key lever is associated with a spring pressed plunger. The plunger S preferably has a rounded upper end contacting with the under side of the associated key lever and being arranged in a socket *s* formed in a horizontal supporting bar T. The stem of each plunger extends through the bar T and carries adjusting nuts *t*, and a stout spring U is interposed between the head of the plunger and the bottom of each socket. By means of the nuts *t* the tension of the springs U may be adjusted. In this way the tension of the several plungers may be individually adjusted to correspond with dif-

ferent type bars as it is desirable that some of the type bars strike the platen with greater force than others. The plungers may be collectively adjusted by means of the devices V which operate on an arm $t'$ of the support T, which it will be observed is pivotally mounted at $t^2$. In Figure 3, I have shown diagrammatically the arrangement of the plungers for accommodating adjacent key levers in different banks of keys.

When a key lever is depressed to a considerable extent, it moves the associated type bar to a point considerably in advance of the platen, which point may be indicated at X in Figure 1. When this point is reached, the key lever comes in contact with the spring pressed plunger and the further downward movement of the key lever is resisted by the spring plunger. Nevertheless, the key lever is moved further downward while the type bar is moved to the platen not only by this further downward movement of the key lever but by its momentum obtained in its accelerated movement from position of rest toward the platen. The type bar position indicated at Y in Figure 1 is a position the type bar may be considered to assume after the plunger S has been depressed to a slight extent. When the plunger has been depressed to a slightly greater extent, no further downward movement of the key lever is possible. The springs U are considerably stronger than the springs G which return the type bars to positions of rest.

In Figure 2 a modification is shown in which two springs of different strengths are used, and these springs in this modification are located above the key levers. As shown, a stout spring Z is surrounded by a lighter spring $Z'$ and both of these springs surround a rod W pivotally connected at $l$ with the key lever and extending through a cap $z$ being provided on its upper outer end with an adjusting nut $z'$. The springs rest on a support $w$ through which the rods W extend. Each key lever may be provided with devices of this character, and where such construction is used, the springs $Z'$ may take the place of the springs G shown in Figure 1 for returning the type bars to normal positions of rest.

By means of the devices illustrated, the downward movement of the type bars is cushioned and their movement is so checked as to reduce the force of the impact of the type bars on the platen which is desirable for many reasons.

I claim as my invention.

1. In a typewriting machine, the combination with the platen, the type bars and key lever of springs pressed plungers for retarding the movement of the key levers when the latter are depressed to a considerable extent, means for adjusting the tension of the spring pressed plungers individually and devices for adjusting the position of these plungers collectively.

2. In a typewriting machine the combination of a type action comprising a train of positive connections between the key lever and the type bar, a spring pressed plunger underlying the key lever which at first retards the downward movement of the key lever and finally stops it before the type bar has reached the platen, and a movable support in which said plunger is mounted.

3. In a typewriting machine the combination of key levers, type bars, a train of constant positive connections between each type bar and its corresponding key lever, a series of spring pressed plungers underlying the key levers which at first resist and finally stop the movement of the key levers, means for varying the tension of the spring pressed plungers individually, and means for adjusting the position of the plungers collectively.

4. In a typewriting machine, the combination of a series of key levers, a bar beneath said key levers provided with staggered rows of spring pressed plungers which first resist and finally stop the movement of the key levers, means for varying the tension of each spring pressed plunger individually, and means for varying the position of the bar and thereby the position of all of the plungers collectively.

5. In a typewriting machine the combination of a type action comprising a train of positive connections between the key lever and the type bar, a spring pressed plunger underlying the key lever which at first retards the downward movement of the key lever and finally stops it before the type bar has reached the platen, means for varying the normal tension of the spring, a movable support in which said plunger is mounted, and means for varying its normal position.

In testimony whereof, I have hereunto subscribed my name.

EDWARD B. HESS.