AU9350638

(12) PATENT ABRIDGMENT (11) Document No. AU-B-50638/93
(19) AUSTRALIAN PATENT OFFICE (10) Acceptance No. 660859

(54) Title
SLEEVE PORTION FOR AN OPTICAL FIBRE PLUG CONNECTOR

(51)[5] International Patent Classification(s)
G02B 006/36

(21) Application No. : **50638/93** (22) Application Date : **11.11.93**

(30) Priority Data

(31) Number	(32) Date	(33) Country
3621/92	**26.11.92**	**CH SWITZERLAND**

(43) Publication Date : **09.06.94**

(44) Publication Date of Accepted Application : **06.07.95**

(71) Applicant(s)
DIAMOND S.A.

(72) Inventor(s)
SILVERIO DE MARCHI; SILVIO MARAZZI

(74) Attorney or Agent
DAVIES COLLISON CAVE , 1 Little Collins Street, MELBOURNE VIC 3000

(56) Prior Art Documents
US 4915472
US 5212752
US 5263103

(57) Claim

1. Sleeve portion for an optical fibre plug connector with at least one sleeve for accommodation of the plug ferrule of a plug which is able to be inserted into the sleeve portion, the sleeve possessing a sleeve opening in front of which, seen from the direction of insertion (a), a moveable protective flap is arranged which, in a closed position, at least partly overlies the sleeve opening and which is able to move into an opened position by insertion of the plug, characterized in that the sleeve portion possesses an inner sleeve housing which is slid into an outer sleeve housing and that the protective flap is held between both the sleeve housings and is mounted to be able to pivot.

The invention concerns a sleeve portion for an optical fibre plug connector according to the preamble of claim 1. These types of sleeve portions are mainly used as adaptors or middle portions for attachment on a housing wall.

The purpose of these types of sleeve portion is to protect the sleeve opening from contamination or from mechanical influences. On the other hand, the emission of light from the sleeve portion when the plug ferrule is withdrawn should be prevented. If this light is, for example, laser light, eye injuries could result as soon as the light ray falls on the unprotected retina. The emission of light from the sleeve portion could also be undesirable for other technical reasons.

In JP-A-57/142 607, a connection sleeve for a photo-electric transducer is described with which the entrance opening for the optical fibre is closed off by a spring tensioned cover. On insertion of the fibre, the cover is displaced to the side. With a plug connector described in "Research Disclosure" No. 275, ~~of~~ Havant, United Kingdom, March 1987, page 124, the sleeve opening is covered by a flexible disk which is pressed into a hollow space when the plug ferrule is inserted.

A problem with the known sleeve portions is that the assembly and mounting of the protective flaps is accompanied by considerable difficulties. The protective flaps must, in fact, fulfil their functions within the smallest of spaces, and they have, of necessity, very small dimensions amounting to a few millimetres. Thus, assembly is relatively laborious.

AUSTRALIAN PATENT OFFICE

In addition, there is the requirement that the protective flap be as a rule tensioned by a separate spring. Only in this way will it be ensured that the protective flap remains in the closed position when the plug ferrule is withdrawn.

It is therefore a purpose of the invention to create a sleeve portion of the type mentioned in the introduction, with which the protective flap, with the highest degree of operating security, can be assembled and disassembled in the simplest way. According to the invention, this purpose is fulfilled with a sleeve portion which possesses the features of claim 1. Since the protective flap is held and mounted to be able to pivot between both sleeve housings, it can be assembled and disassembled in a particularly simple way. There is no requirement for a separate axle or similar, as, for example, is the case with JP-A-57/142 607. The protective flap remains connected with the sleeve portion regardless, and will not be lost, and with operating problems it is easily accessible or replaceable at all times. Operating security is considerably increased because the protective flap is mounted to be able to pivot.

At the same time, it is particularly advantageous if the protective flap is held in the closed position at an angle which is inclined in relation to the centre axis of the sleeve and if it is able to be pivoted into the open position in the direction towards the sleeve opening. Through the inclined position, the protective flap must only carry out a relatively small pivoting motion into the open position, and the insertion resistance for the plug will only be slightly raised.

Preferably, the flap is held in the closed position under spring tension. By this means, the protective flap automatically pivots back into the closed position as soon as the plug ferrule is withdrawn from the sleeve.

AUSTRALIA PATENT OFFICE

The spring tension is preferably provided by a leaf spring. The leaf spring can be easily accommodated in the sleeve portion, and the spring force is easily sufficient to place the protective flap under tension.

The protective flap can possess lateral linkage lugs for pivotable mounting in the mounting positions formed by both the sleeve housings. It would also be conceivable without problems to mount the protective flap in guide grooves or similar. The protective flap can furthermore possess lateral limit stop lugs for limiting of the position when closed. With that, with regard to the forces involved, a particularly favourable inclined position of the protective flap can be selected. The protective flap can be formed approximately as a rectangle, since this will considerably simplify its lateral guidance and mounting. It could, without further problems, also be circular or possess a rounded form.

It is particularly advantageous if the inner sleeve housing has at least one opening in the housing wall through which the protective flap is able to be slid for assembly and disassembly, this opening being able to be closed off by the outer sleeve housing. This opening permits placement of the sleeve flap in the correct place in the most direct way, without difficult manipulation or auxiliary tools being necessary. Fitting can, with that, be easily automated.

The sleeve portion can possess a sleeve in which the plug ferrule is able to be inserted from both sides, a protective flap being arranged in front of each sleeve opening. Through that, the sleeve portion according to the invention can be used in many ways, since in principle it is of no consequence which of the inserted plugs carries the optical fibre which emits light. With any desired combination, it is reliably

AUSTRALIA PATENT OFFICE

ensured that the sleeve opening is covered when the plug ferrule is withdrawn.

In the case of a double sided sleeve portion, both the protective flaps will preferably be tensioned in the closed position by a common leaf spring which is arranged beneath the sleeve in the sleeve portion. The leaf spring can, with that, be fixed in its position by a sleeve holder which is able to be inserted into the sleeve portion, and indeed through an opening in the inner sleeve portion, in a similar way to the protective flap itself.

Further advantages and individual features arise from the following description of an embodiment, and from the drawings. Namely:

Figure 1 a plug connector dismantled down to its individual components with a sleeve portion according to the invention,

Figure 2 the plug connector according to figure 1 in an assembled condition,

Figure 3 a cross section through the plane I-I according to figure 2,

Figure 4 a cross section through the plane II-II according to figure 2,

Figure 5 a perspective representation of the inner sleeve portion with a view of the underside, and

Figure 6 a perspective representation of a plug connector with partly cutaway sleeve portion.

Figure 1 shows the individual components of a typical plug connector with a sleeve portion 1 and with a plug 4. The sleeve portion 1 is in addition conceived to accommodate two plugs 4 of the same type from both sides, each plug ferrule 3 penetrating into the actual sleeve 2 and there being centred in relation to the plug ferrule lying opposite.

The sleeve portion 1 has an outer sleeve portion 9 with a flange 13 on which the sleeve portion can be screwed, for example, onto a housing wall. The inner sleeve portion 8 can be inserted into the outer sleeve portion 9. As is made clear particularly in figures 3 and 4, both sleeve housings have an approximately box shaped, rectangular cross section. Fixing of the inner sleeve housing in the outer sleeve housing ensues through snap-on attachable end frames 17 and 17', as can in particular be seen in figure 2.

The inner sleeve housing 8 has sprung locking catches 14, 14' on its upper side which serve to arrest the plug in the inserted position. Guide grooves 15 are arranged on the side walls of the inner sleeve housing 8 which serve to accept the plug in the correct position. An opening 16 is arranged on the underside of the inner sleeve housing 8 through which the sleeve 2, with the associated sleeve holder 12, 12', can be inserted.

The sleeve is preferably floatingly mounted in the sleeve holder, both portions of the sleeve holder possessing flange type edge sections 25, 25' which are oriented towards each other. On the inner sleeve housing, lateral guide grooves 26 are likewise arranged for accommodation of both the edge sections. A leaf spring 7, the ends 18, 18' of which engage on the protective flap 6, 6', is arranged beneath the sleeve holder. The middle section 19 of the leaf spring is formed as a clasp in which both the edge sections 25, 25' of the sleeve

holder engage. In this way, the position of the leaf spring 7 is fixed in the sleeve housing.

The configuration of both the protective flaps 6, 6´ can be particulary seen in figure 3. Each protective flap has an approximately rectangular form and is equipped with lateral linkage lugs 10 which are held between the inner and outer sleeve housing. Apart from that, each protective flap has lateral limit stop lugs 11, which engage laterally in the guide grooves 15 and which limit the inclined position when the flaps are closed. This inclined position in relation to the optical axis also causes the light emission to be reflected away, and with that a high return loss. With that, the guide grooves open laterally in the direction of pivoting in such a way that each protective flap can assume a position parallel to the centre axis of the sleeve. The distance of the mounting position for the linkage lugs 10 from the sleeve openings 5, respectively 5´ is so selected that the free ends of each protective flap lie, in their open position, just in front of a sleeve opening.

The plug 4, with its plug ferrule 3, can basically have any desired construction. In the embodiment, it comprises in principle a rectangular plug housing 22 which is provided with lateral guide rails 23. These guide rails fit into the guide grooves 15 on the sleeve portion. The locking catches 14, respectively 14´ can engage in a locking bar 20 on the upper portion of the plug housing. A releasing lever 21 arranged on the plug housing serves to raise the locking catch and with that to release the locking device again. A ferrule holder 24 is stamped into the plug housing 22, said ferrule holder 24 being connected firmly with the optical fibre cable, respectively with the plug ferrule 3, which are not shown in any greater detail here.

Figure 2 shows the plug connector in an assembled condition, a plug 4 having been inserted into the right side, the left side remaining free. Both ends 18, 18´of the leaf spring 7 engage, freely moveable, on the protective flaps 6 and 6´.

If no plug is inserted into the sleeve portion, the sleeve opening 5, seen from the direction of insertion a, remains overlain, respectively covered. A light ray emitted from the inserted plug 4 will thus be reflected away by the protective flap 6.

If now a plug 4 is inserted into the sleeve portion, the front portion of the plug ferrule 3 will thus run up against the protective flap and will press this, countering the force of the leaf spring, downwards with a pivoting movement until it has been forced back completely beneath the plane of the plug housing 22. This position is visible on the right side of figure 2, or in figure 4. As soon as the plug has reached its end position, the locking catch 14 will engage behind the locking bar 20. In order to withdraw the plug, first the releasing lever 21 must be activated. The protective flap will in each case, under the tension force of the spring, move in the direction of the closed position, as the plug permits it, until the final closed position is reached.

The mounting of the sleeve 2, as shown, is particularly advantageous, especially when combined with the leaf spring and with the protective flaps. This mounting could also possess advantages independent from the protective flaps. With the exception of the sleeve 2 and the plug ferrule 2, all other components are preferably manufactured from a plastic material. Plug ferrule and sleeve could be made from a hard metal, ceramic or, if transmission loss is of lesser significance, likewise from a plastic material.

In figure 5, an assembly sequence of a sleeve portion according to the invention is shown. An opening 16, which extends practically along the entire length of the sleeve housing, is able to be seen on the underside of the inner sleeve portion 8. The width of the opening approximately corresponds to the width of both protective flaps 6, 6'. The linkage lugs 10 and the limit stop lugs 11 of the protective flaps are introduced via lateral grooves 27. Likewise visible here are the already inserted flange type edge sections 25, 25' of the sleeve holder. These edge sections engage, in their mounted condition, with the middle clasp section 19 of the leaf spring 7.

The ends 18, 18' of the leaf spring are bent down and move without fixed connection in the openings 30 on the protective flaps. After placing both the protective flaps 6, 6' into the the inner sleeve portion 8, the leaf spring 7 is placed upon them and subsequently the entire unit is slid into the outer sleeve housing 9. This procedure permits relatively simple automation.

In figure 6, a plug connector with a sleeve portion according to the invention is once again represented. Both the plugs 4 are likewise equipped with a protective flap 28, which automatically flaps up during insertion into the plug. Kinking protection is suggested with 29, which protects the area of transition between the optical fibre cable and the plug 4.

Inasmuch as the invention is subject to modifications and variations, the foregoing description and accompanying drawings should not be regarded as limiting the invention, which is defined by the following claims and various combinations thereof:

~~The reference numerals in the following claims do not in any way limit the scope of the respective claims.~~

AUSTRALIAN PATENT OFFICE

THE CLAIMS DEFINING THE INVENTION ARE AS FOLLOWS:-

1. Sleeve portion for an optical fibre plug connector with at least one sleeve for accommodation of the plug ferrule of a plug which is able to be inserted into the sleeve portion, the sleeve possessing a sleeve opening in front of which, seen from the direction of insertion (a), a moveable protective flap is arranged which, in a closed position, at least partly overlies the sleeve opening and which is able to move into an opened position by insertion of the plug, characterized in that the sleeve portion possesses an inner sleeve housing which is slid into an outer sleeve housing and that the protective flap is held between both the sleeve housings and is mounted to be able to pivot.

2. Sleeve portion according to claim 1, characterized in that the protective flap is spring tensioned into the closed position.

3. Sleeve portion according to claim 1 or 2, characterized in that the protective flap is held in the closed position at an angle inclined in relation to the longitudinal axis of the sleeve and that it is able to pivot into the open position in a direction towards the sleeve opening.

4. Sleeve portion according to any one of claims 1 to 3, characterized in that the protective flap possesses lateral linkage lugs for pivotable mounting in mounting positions which are formed by both the sleeve housings.

5. Sleeve portion according to claim 4, characterized in that the protective flap possesses lateral limit stop lugs for limiting its position when closed.

6. Sleeve portion according to claims 4 or 5, characterized in that the protective flap is formed approximately rectangularly.

7. Sleeve portion according to any one of claims 1 to 6, characterized in that the inner sleeve housing possesses at least one opening in a housing wall, through which opening the protective flap is able to be slid for assembly and

AUSTRALIA PATENT OFFICE

disassembly, and that this opening is able to be closed off with the outer housing.

8. Sleeve portion according to any one of claims 1 to 7 characterized in that the protective flap is spring tensioned into the closed position by means of a leaf spring.

9. Sleeve portion according to any one of claims 1 to 8, characterized in that the sleeve portion possesses a sleeve in which a plug ferrule is able to be inserted from both sides and that a protective flap is arranged in front of each sleeve opening.

10. Sleeve portion according to claim 9, characterized in that both protective flaps are tensioned into the closed position by means of a common leaf spring with sprung ends, said leaf spring being accommodated beneath the sleeve in the sleeve portion.

11. Sleeve portion according to claim 10, characterized in that the sleeve is mounted in a sleeve holder which is able to be slid into the sleeve portion and that the leaf spring is fixed by the sleeve holder.

12. Sleeve portion according to claim 11, characterized in that the sleeve holder is sub-divided into two components which possess flange type edge sections which are oriented towards one another and that the leaf spring possesses a middle section in which the edge sections engage.

13. A sleeve portion substantially as hereinbefore described with reference to the drawings.

Dated this 2nd day of May, 1995

DIAMOND S.A.

By its Patent Attorneys

Davies Collison Cave

Abstract

The sleeve portion (1) contains a sleeve (2), the sleeve openings of which are overlain by moveable protective flaps (6, 6'). The protective flaps are placed under spring tension and are forced out of the closed position into an opened position during insertion of a plug ferrule (3) into the sleeve (2). The protective flaps have the effect that, when a plug is withdrawn out of the sleeve portion, no light can be emitted from the sleeve opening. The pivotable mounting of the protective flaps ensues between an inner sleeve housing (8) and an outer sleeve housing (9).

(Figure 2).

50638/93

Fig. 1

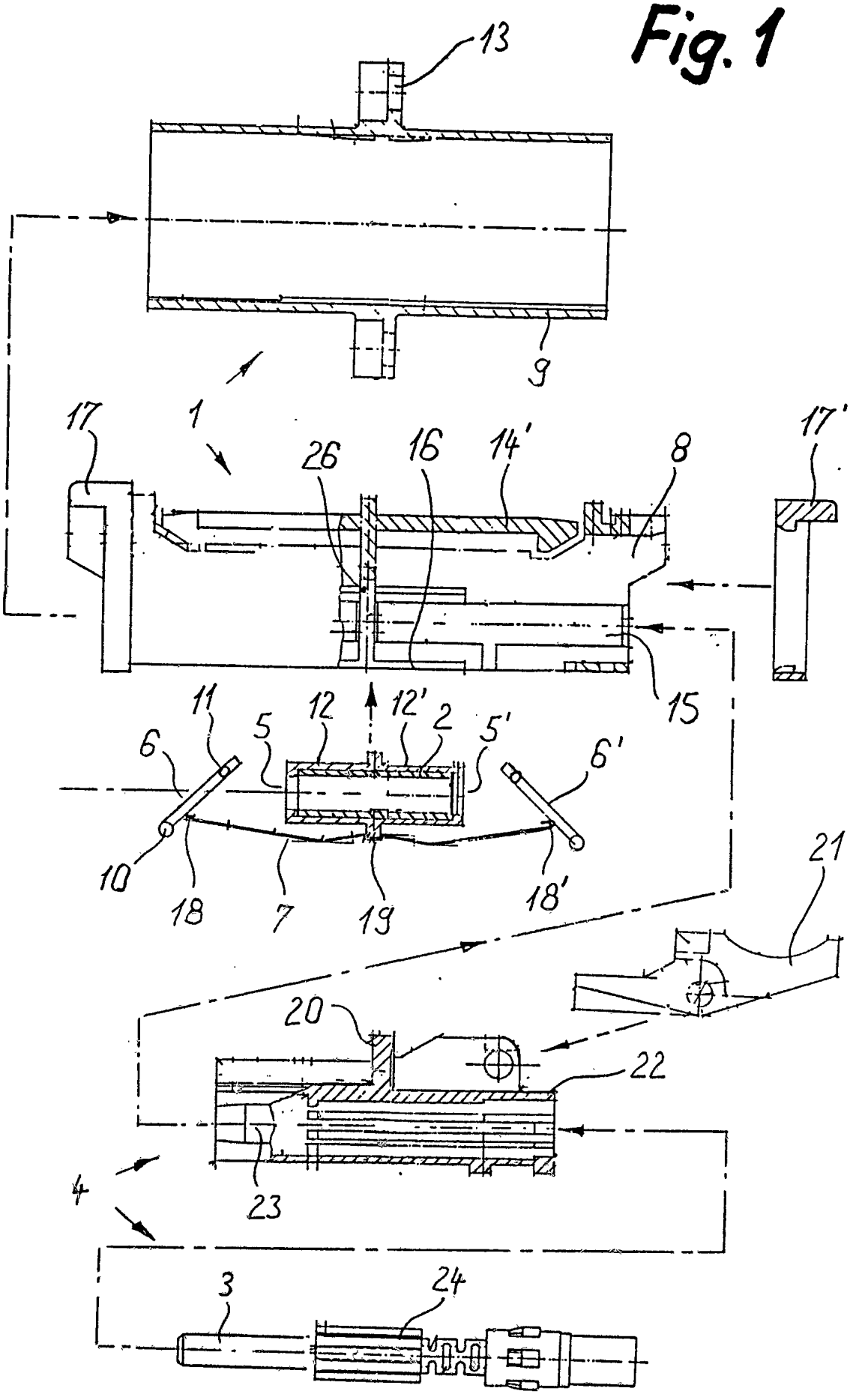

Fig. 2

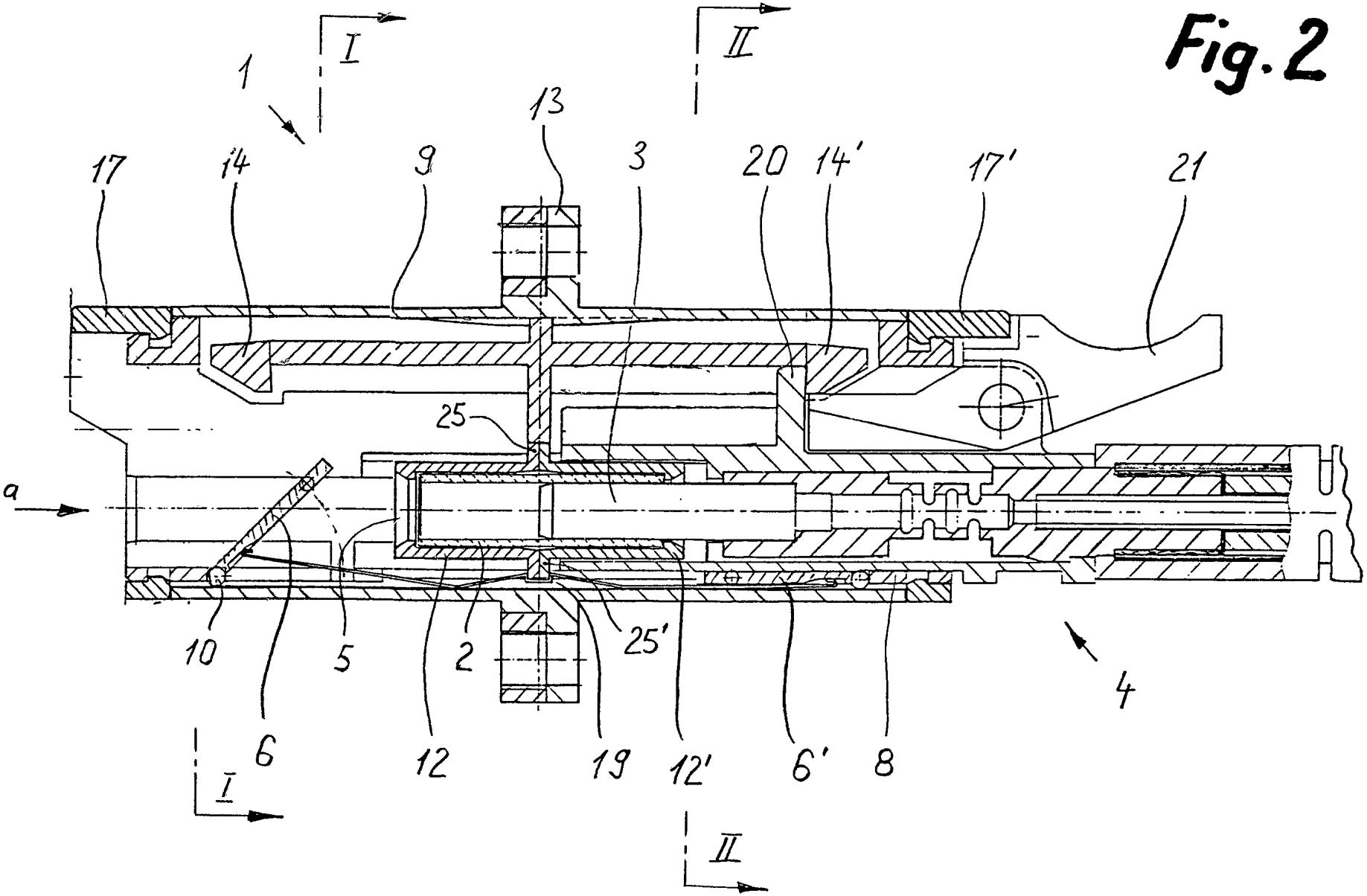

sc0638/93

Fig. 3

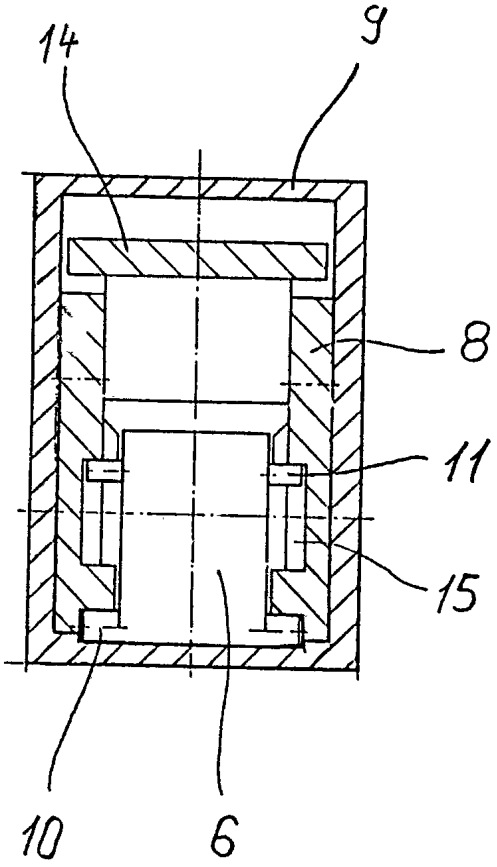

Fig. 4

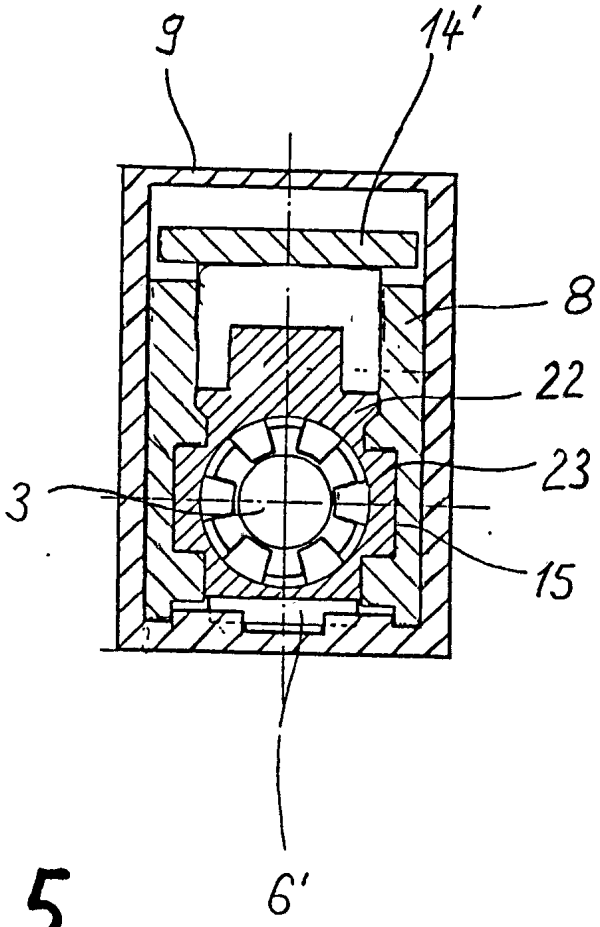

Fig. 5

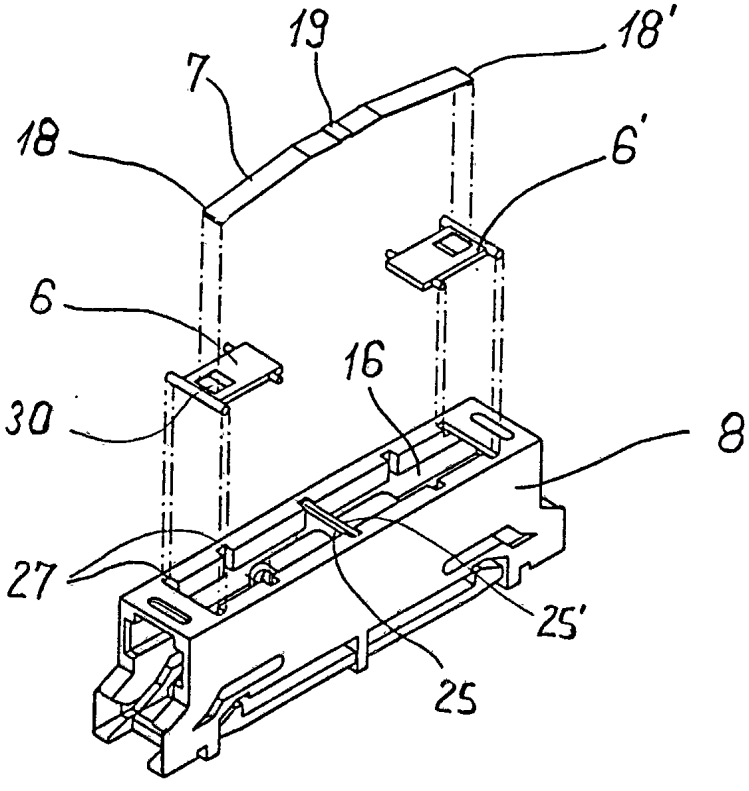

Fig. 6

