US00D375319S

United States Patent [19]

Johnson et al.

[11] **Patent Number: Des. 375,319**

[45] **Date of Patent: **Nov. 5, 1996**

[54] **TABLETOP VIDEO CAMERA**

[76] Inventors: **Ward C. Johnson**, 4507 Moorland Ave.; **Douglas S. Clapp**, 4312 Branson St., both of Edina, Minn. 55424; **David E. Krekelberg**, 8768 Cottonwood La., Maple Grove, Minn. 55369

[**] Term: **14 Years**

[21] Appl. No.: **37,064**

[22] Filed: **Apr. 3, 1995**

Related U.S. Application Data

[63] Continuation of Ser. No. 27,914, Jul. 29, 1994, abandoned, which is a continuation of Ser. No. 7,749, Apr. 29, 1993, abandoned.

[52] **U.S. Cl.** **D16/202**; 248/160

[58] **Field of Search** D16/200–204, D16/208, 221, 242; D26/62; 348/143, 373–376; 352/242, 243; 354/64, 76, 81, 82, 288, 293; 248/160

[56] **References Cited**

U.S. PATENT DOCUMENTS

D. 318,862	8/1991	Geissel et al.	D26/62
D. 349,714	8/1994	Hasegawa	D16/203
4,842,174	6/1989	Sheppard et al.	248/160
4,963,903	10/1990	Cane	354/81

FOREIGN PATENT DOCUMENTS

4135671	5/1993	Germany	354/76

OTHER PUBLICATIONS

Video Dynamics Flexi–Cam®, Medical CCD Color Video Camera System, Video Dynamics, Inc. May 1992.

Littlite, Gooseneck Lamps & Accessories—High Intensity, Low Intensity, 1993, CAE, Inc.

Primary Examiner—Ted Shooman
Assistant Examiner—Adir Aronovich
Attorney, Agent, or Firm—Moore & Hansen

[57] **CLAIM**

The ornamental design for tabletop video camera, as shown and described.

DESCRIPTION

FIG. **1** is a top perspective view of a tabletop video camera showing our new design;
FIG. **2** is a front elevational view thereof;
FIG. **3** is a side elevational view thereof, the undisclosed opposite side being a mirror image thereof;
FIG. **4** is a rear elevational view thereof;
FIG. **5** is a top plan view thereof; and,
FIG. **6** is a bottom plan view thereof.
The flexible gooseneck is shown fragmented and broken away to indicate intermediate length.

1 Claim, 5 Drawing Sheets

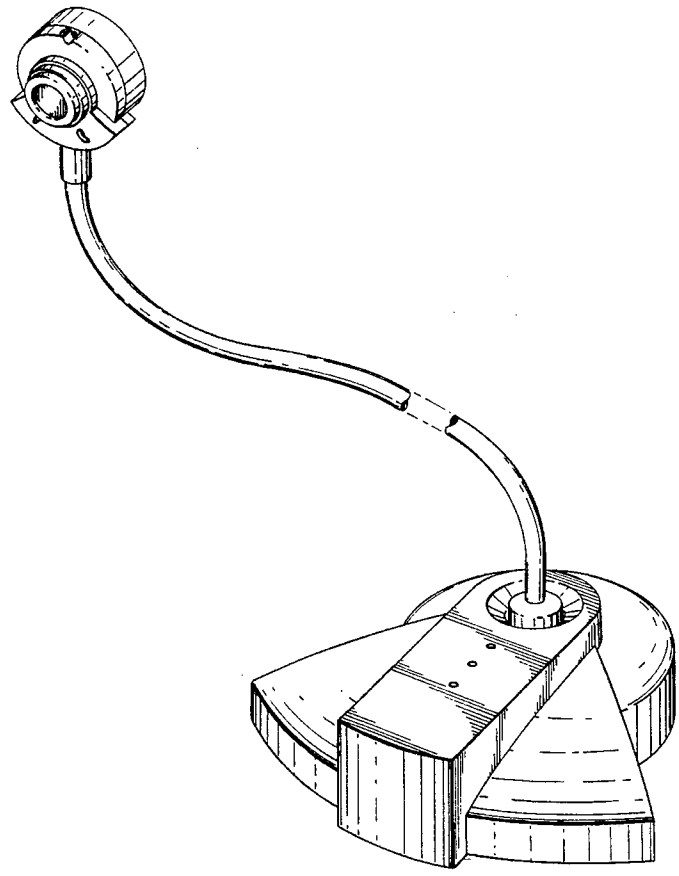

FIG. 1

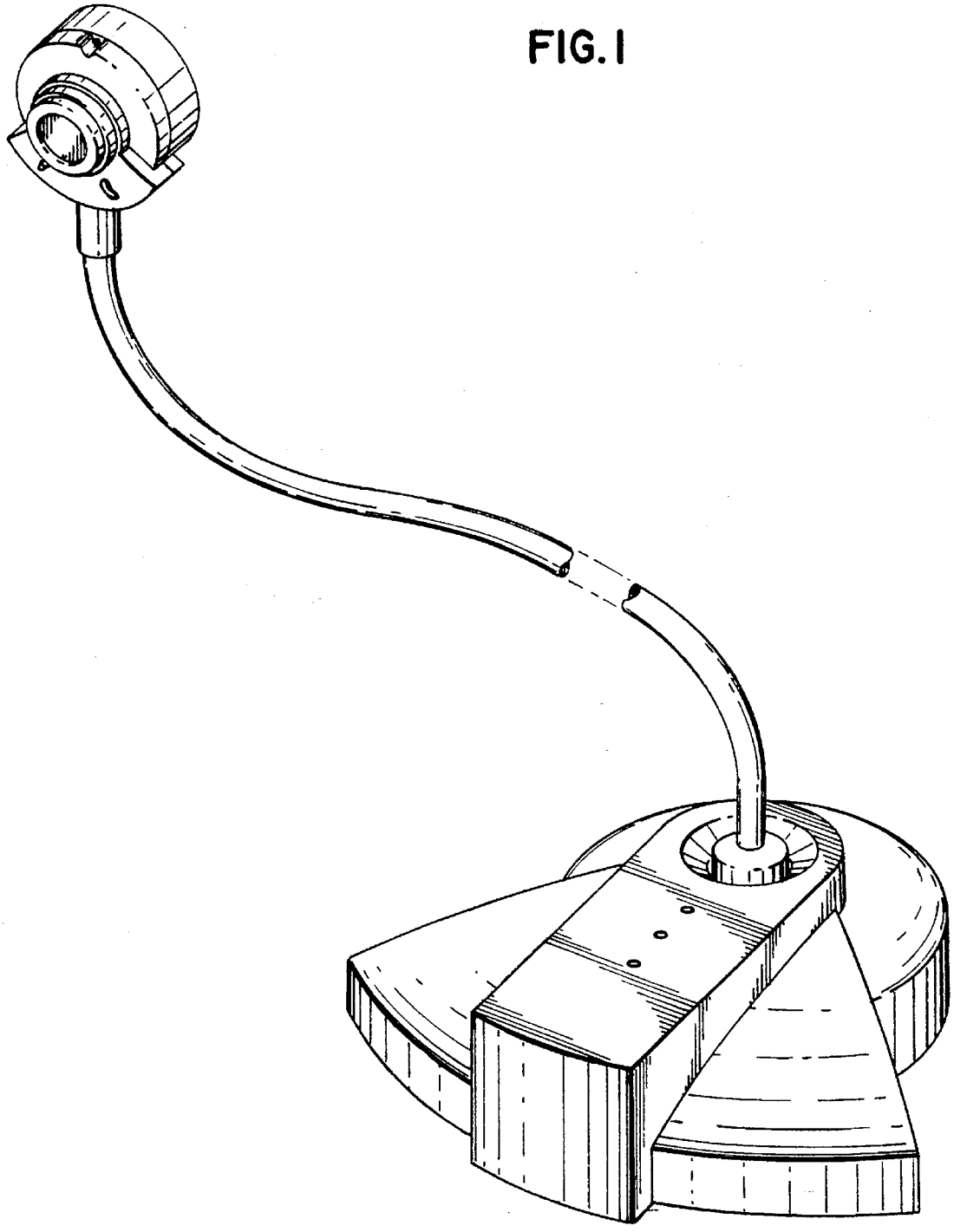

FIG. 2

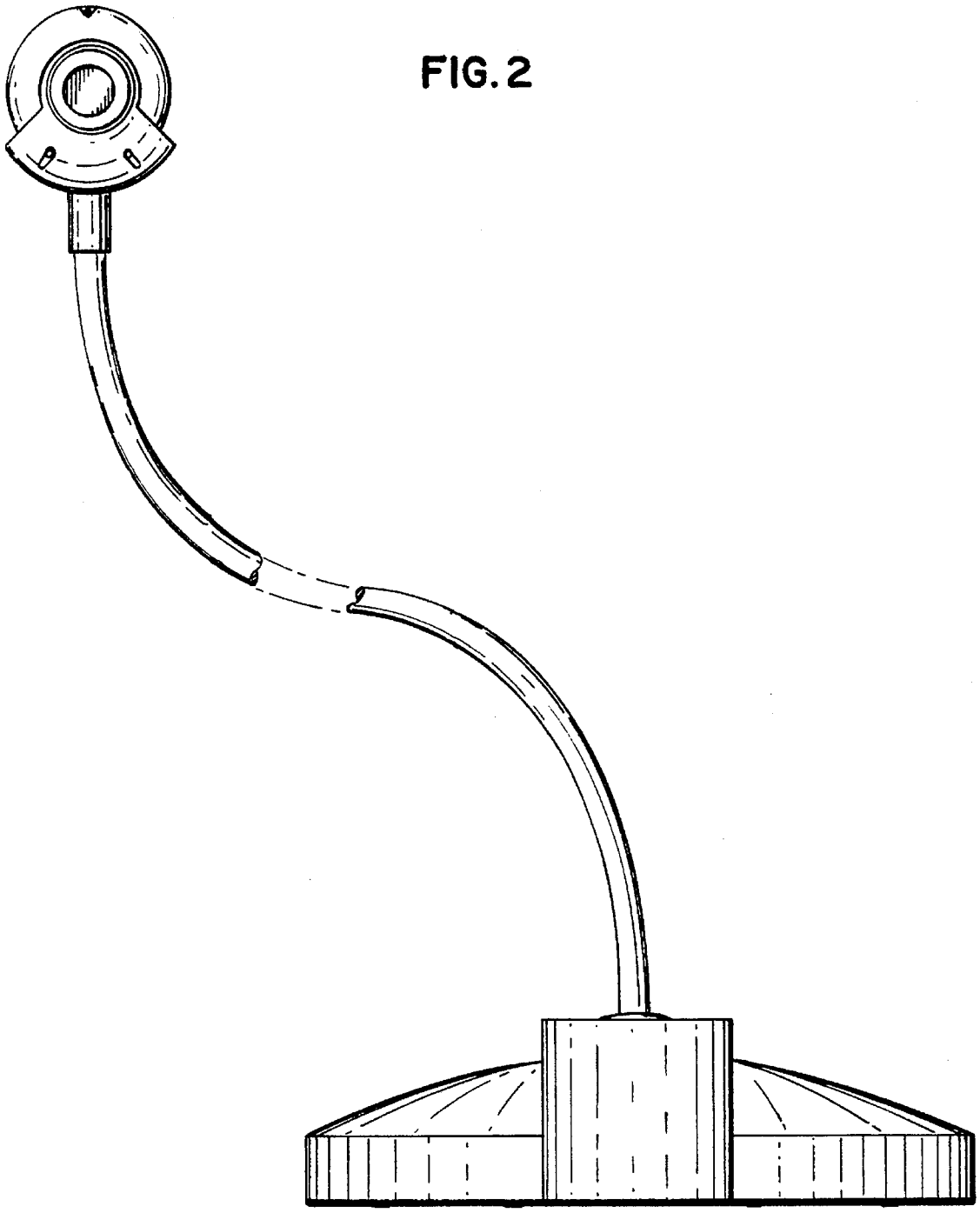

FIG. 3

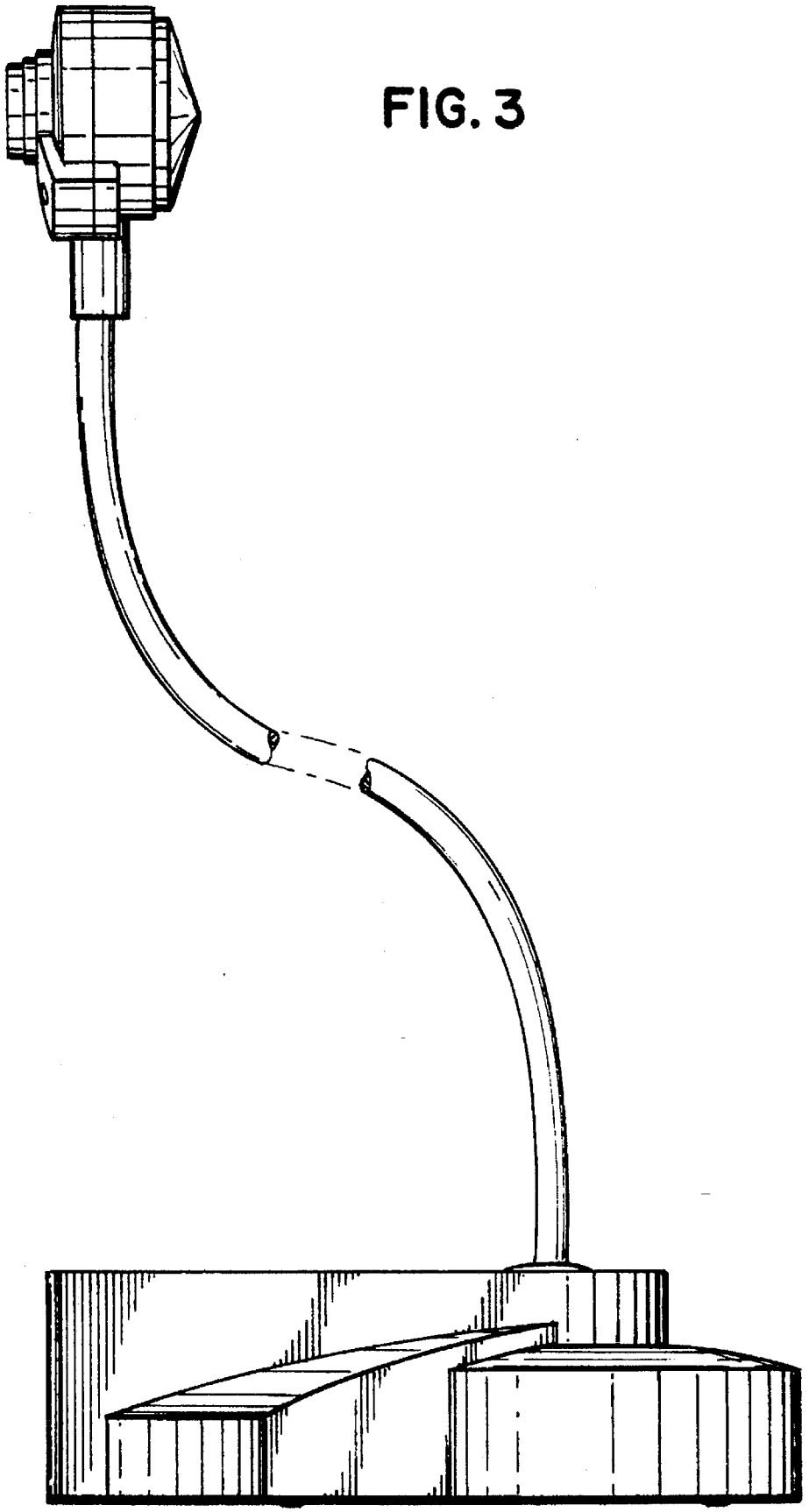

FIG.4

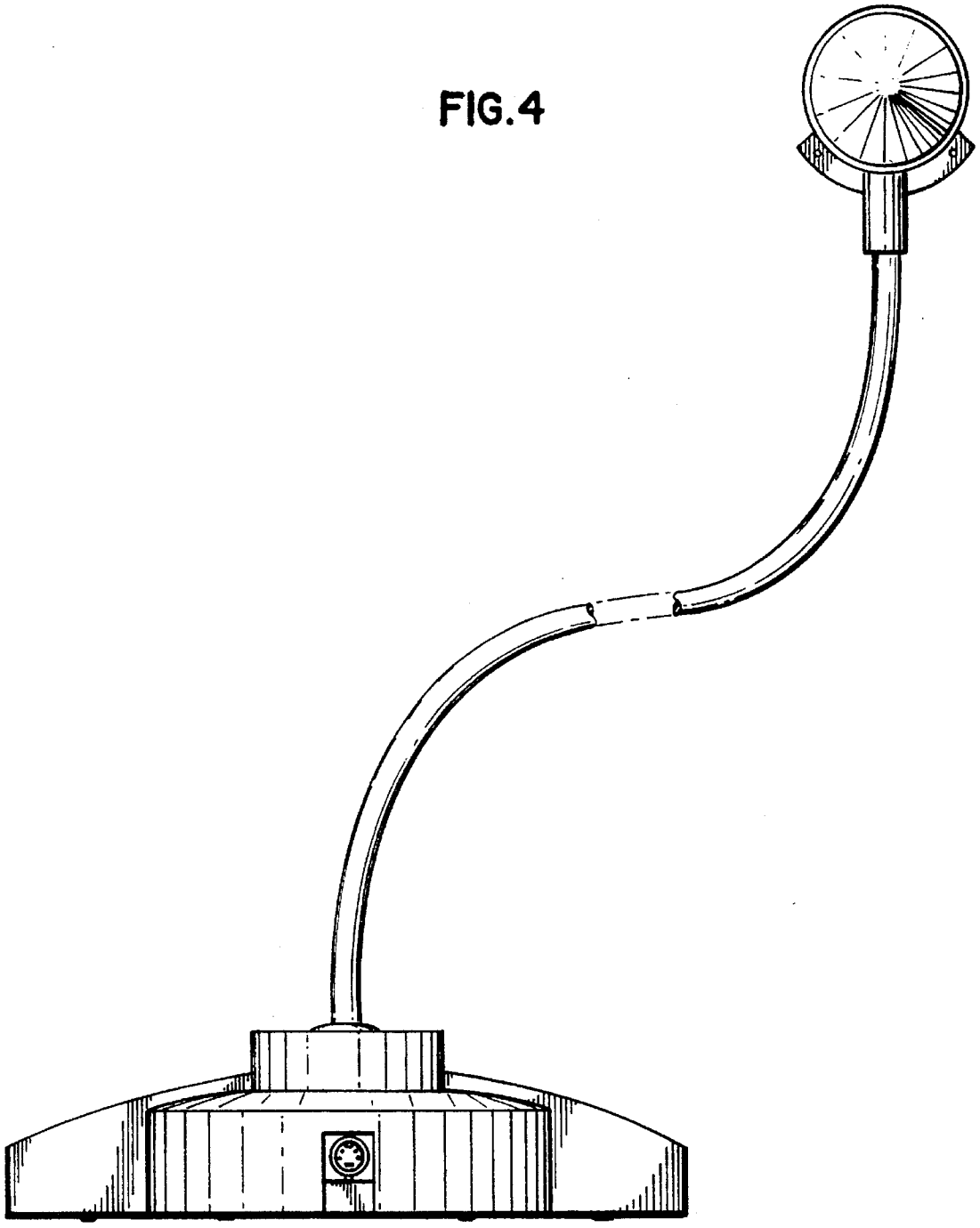

FIG. 5

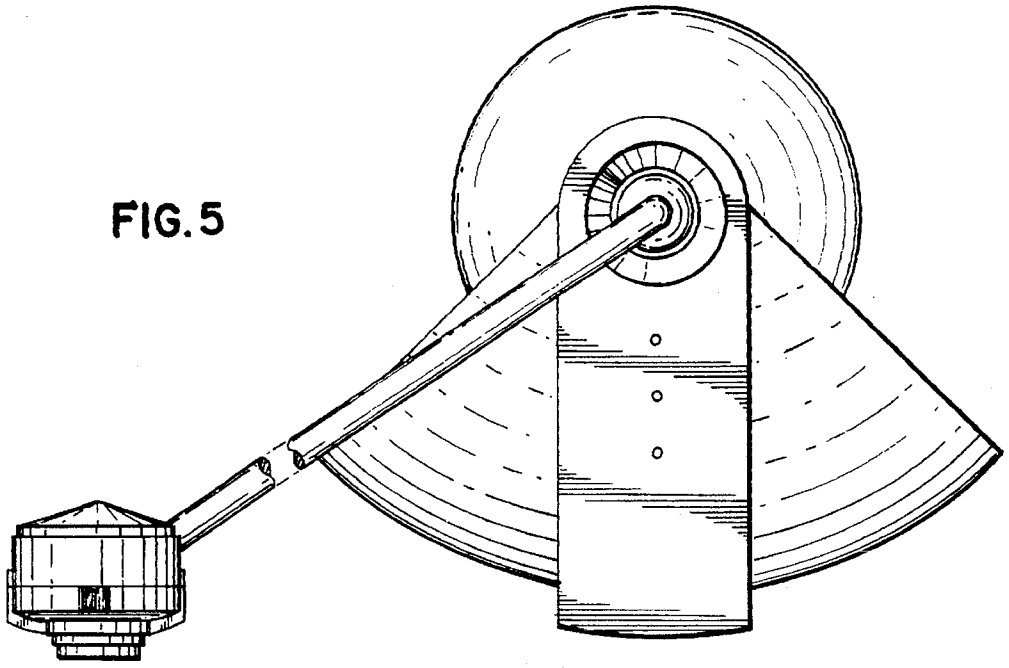

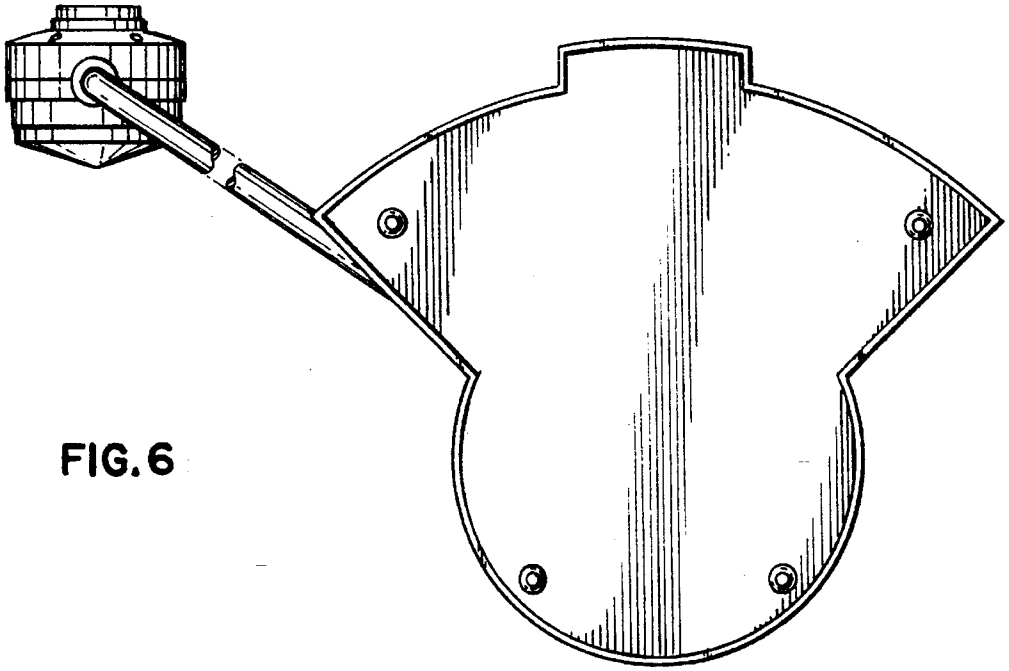

FIG. 6