(No Model.)

J. G. DUNTON & T. V. LILLY.

BICYCLE BELL.

No. 590,433. Patented Sept. 21, 1897.

Fig. 1.

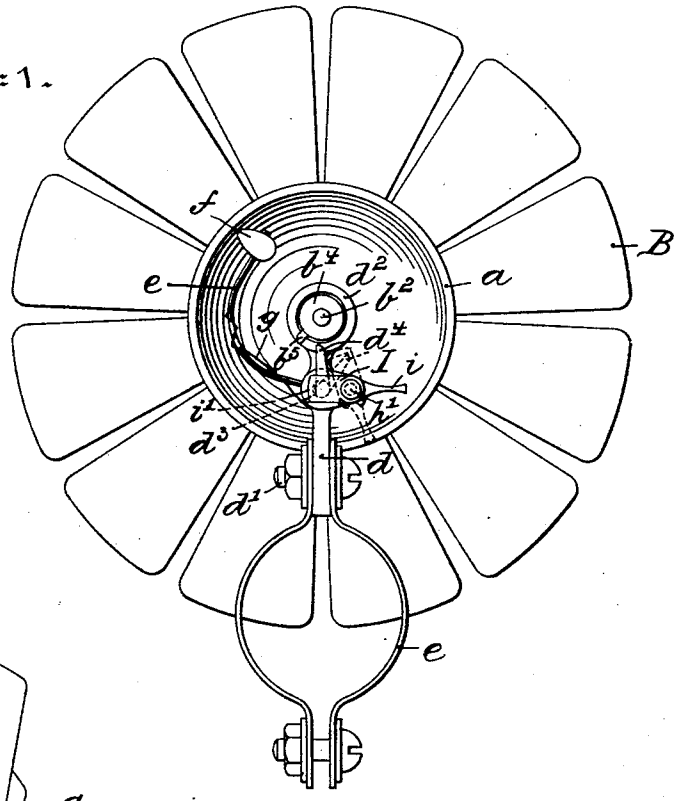

Fig. 2.

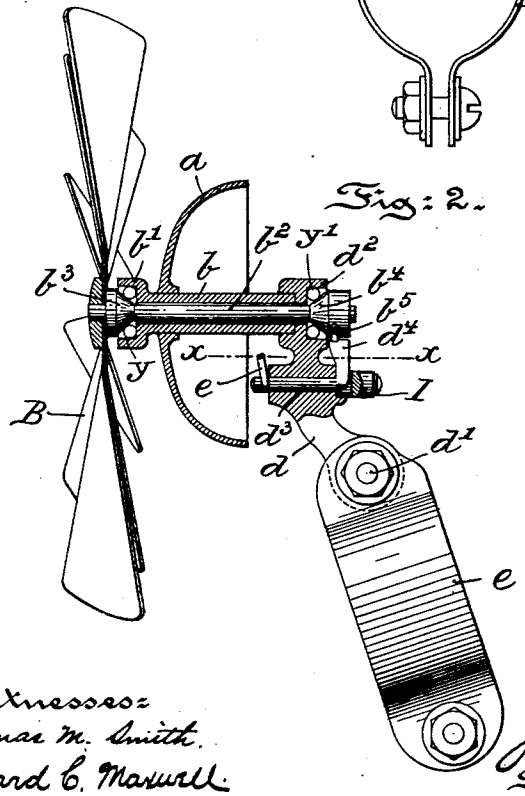

Fig. 3.

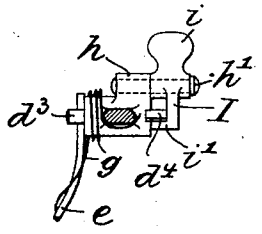

Witnesses:
Thomas M. Smith.
Richard C. Maxwell.

Inventors:
James G. Dunton, and Thomas V. Lilly,
By J. Walter Douglass.
Attorneys.

THE NORRIS PETERS CO., PHOTO-LITHO., WASHINGTON, D. C.

UNITED STATES PATENT OFFICE.

JAMES G. DUNTON AND THOMAS V. LILLY, OF PHILADELPHIA, PENNSYLVANIA.

BICYCLE-BELL.

SPECIFICATION forming part of Letters Patent No. 590,433, dated September 21, 1897.

Application filed January 11, 1897. Serial No. 618,686. (No model.)

To all whom it may concern:

Be it known that we, JAMES G. DUNTON and THOMAS V. LILLY, citizens of the United States, residing at the city of Philadelphia, in the county of Philadelphia and State of Pennsylvania, have invented certain new and useful Improvements in Bell-Sounding Devices for Bicycles and other Vehicles, of which the following is a specification.

Our invention has relation to a bell-sounding device for a bicycle or similar vehicle in which the hammer of the bell is adapted to be actuated by a shaft which in turn is operated automatically by a wind-wheel, and in such connection it relates particularly to the construction, arrangement, and operation of such a bell and to means for preventing the sounding of the bell while the wind-wheel is permitted to rotate.

The principal objects of our invention are, first, to provide a bell adapted to be secured to the steering-post or some other member of the vehicle, the hammer of said bell being actuated by a shaft traversing the bell, said shaft being secured to and adapted to be rotated by a wind-wheel; second, to provide a bell with a hollow sleeve, a bracket carrying said sleeve and having a pivoted clip for supporting said device to the frame of said vehicle, a shaft provided with coned ends traversing said sleeve and engaging ball-bearings, a hammer pivoted to a shaft held in said bracket, a spring adapted to throw the hammer in one direction, and a pin carried by the wind-wheel shaft and adapted to throw the hammer in the opposite direction, and, third, to provide a bell with a sleeve having a socket for the reception of a ball-bearing, a shaft with coned ends engaging said bearing and the complemental bearing of a bracket mounted on said sleeve, said shaft provided with a stud-pin having a wind-wheel mounted thereon, said bracket provided with a pivotal clip for engaging the sounding device to the frame of said vehicle, and a hammer or clapper arm engaging a shaft supported in said bracket and provided with an angular tongue or projection adapted to be brought into contact with a pin of said wind-wheel shaft by the rotation thereof to actuate in the one instance said hammer or clapper to cause the bell to sound and in the other instance to hold the same away from the said bell when a pivotal locking device is brought into engagement with the tongue or projection of said clapper or hammer arm shaft and at the same time to afford free rotation of the wind-wheel shaft without any sounding of the bell.

Our invention, stated in general terms, consists of a bell actuated by a wind-wheel and with a locking device when the same are constructed and arranged in substantially the manner hereinafter described and claimed.

The nature and scope of our invention will be more fully understood from the following description, taken in connection with the accompanying drawings, forming part hereof, in which—

Figure 1 is a rear elevational view of a bell embodying the main features of our invention and also showing means for locking the clapper or hammer in inoperative position for permitting the wind-wheel to rotate without sounding the bell. Fig. 2 is a view, partly in side elevation and partly in section, of a device of our said invention; and Fig. 3 is a sectional view on the line $x\ x$ of Fig. 2.

Referring to the drawings, a represents a bell which is secured to a sleeve b, provided at one end with a socket b' for the reception of ball-bearings y. This sleeve b is secured at the opposite end to a bracket d, which in turn is pivotally connected, as at d', to a clip e, adapted to be firmly attached to the steering-post, handle-bar, or some other portion of a bicycle or similar vehicle. This bracket is provided with a complemental socket d^2 for the reception of ball-bearings y'. In the lower portion of said bracket d is mounted a shaft d^3, provided with an angular tongue or projection d^4 at the free end thereof, and at the opposite end with an arm e of a hammer or clapper f. g is a spring coiled around the bracket d at one end and at the other end around the arm e of said hammer. Mounted on the sleeve b is a shaft b^2, provided with coned ends b^3 and b^4, adapted to engage the ball-bearings y and y' of said sleeve b and bracket d. Beyond the forward coned end of the shaft b^2 is provided a pin forming the bearing for a wind-wheel B, as clearly shown in Fig. 2. The rear coned end of

the shaft b^2 is provided with a pin b^5, adapted to engage in the rotation of said shaft b^2 by the wind-wheel B with the tongue or projection d^4 of the clapper or hammer arm shaft d^3 to cause periodically said hammer or clapper to sound said bell a. In the bracket d is provided a bearing h for a pivot h', on which is mounted a locking device I, having a finger i and a right-angular recessed projection i', adapted to be brought into engagement manually with the tongue or projection d^4, to thereby throw the arm e of the hammer f out of position under the influence of the spring g to permit the shaft b^2 to freely rotate by means of said wind-wheel B while the locking device I is in engagement with the tongue or projection d^4, and hence without sounding the bell a, whereby the device as so arranged and hereinbefore explained is adapted to be not only employed as a means of warning to persons of the approach of a vehicle by continuous or intermittent ringing of the bell, but also affording by the rotation of said wind-wheel to riders of cycles a means in the heated season of creating artificially a certain draft in advance of the rider for cooling off the person.

It will be manifestly obvious that as to minor details modifications may be made without departing from our invention, and hence we do not wish to be understood as limiting ourselves to the precise construction and arrangement of all the parts as hereinbefore explained and illustrated; but,

Having thus described the nature and objects of our invention, what we claim as new, and desire to secure by Letters Patent, is—

1. The combination, of a bell, a clapper or hammer actuated by a tongue or projection, a rotatable shaft mounted in ball-bearings and provided with a wind-wheel and a pin for actuating said lug or projection, and a pivotal locking device adapted to engage said tongue or projection, substantially as and for the purposes described.

2. The combination of a bell, a clapper or hammer having an arm connected with a shaft provided with an angular tongue or projection, a sleeve provided with a ball-bearing socket at one end, a bracket with a complemental ball-bearing socket and on which bracket said sleeve is mounted, a coned-end rotatable shaft mounted in said sleeve and bracket, and carrying pins, one adapted to engage said tongue or projection and the other carrying a wind-wheel, a pivotal locking device provided with a recessed projection and a thumb-piece, and said device adapted to engage said tongue or projection, substantially as and for the purposes described.

3. The combination with a wind-wheel mounted on a rotatable shaft, of a bell and its actuating mechanism for periodically sounding said bell through the rotation of said shaft and a locking device for throwing the bell hammer or clapper out of range of said bell to permit of the rotation of said shaft by said wind-wheel without the sounding of said bell, substantially as and for the purposes described.

4. The combination with a wind-wheel mounted on a rotatable shaft provided with a pin, of a bell and a hammer or clapper having a retracting-spring connected therewith and a tongue and a locking device provided with a finger-piece, and an angular projection adapted to engage said tongue, substantially as and for the purposes described.

In testimony whereof we have hereunto set our signatures in the presence of two subscribing witnesses.

JAMES G. DUNTON.
THOS. V. LILLY.

Witnesses:
J. WALTER DOUGLASS,
THOMAS M. SMITH.