March 26, 1940. W. E. SACKNER ET AL 2,195,096

IMITATION REED AND METHOD OF FORMING SAME

Filed Sept. 16, 1939 2 Sheets-Sheet 1

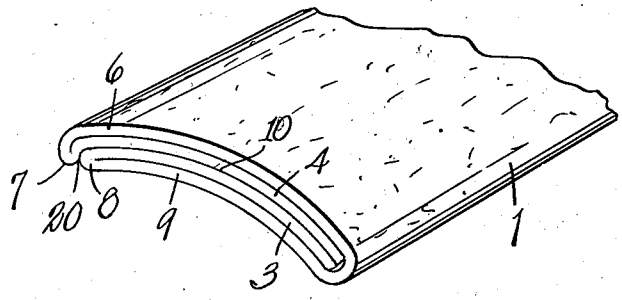

Fig. 1.



Fig. 2.

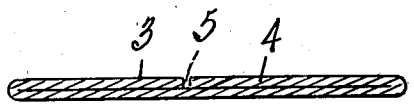

Fig. 3.

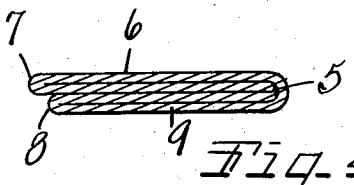

Fig. 4.

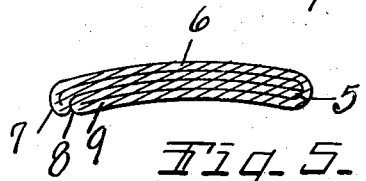

Fig. 5.

INVENTOR.
Wade E. Sackner
John E. Millett
BY Earl & Chappell
ATTORNEYS.

March 26, 1940. W. E. SACKNER ET AL 2,195,096

IMITATION REED AND METHOD OF FORMING SAME

Filed Sept. 16, 1939 2 Sheets-Sheet 2

Fig. 6.

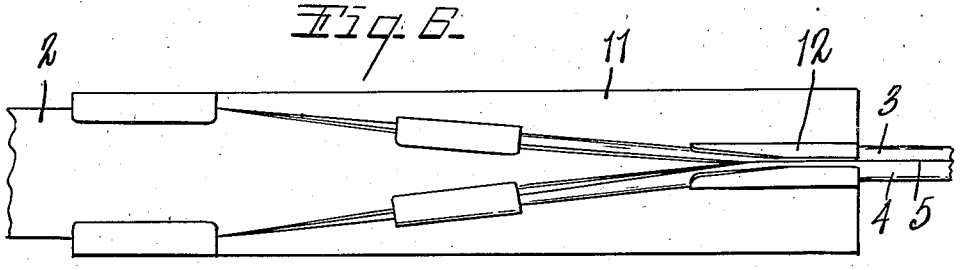

Fig. 7.

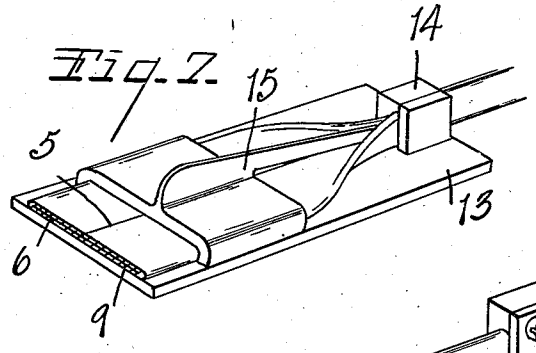

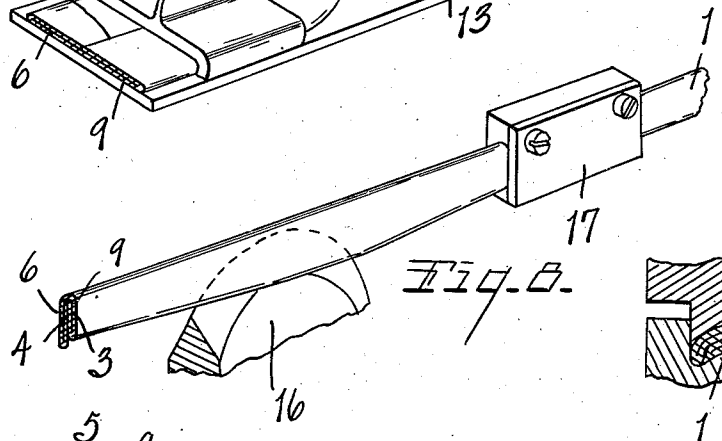

Fig. 8.

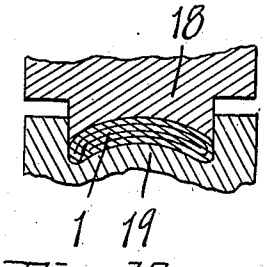

Fig. 10.

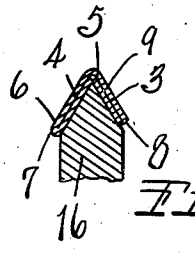

Fig. 9.

INVENTOR.
Wade E. Sackner
John E. Millett
BY Earl & Chappell
ATTORNEYS.

Patented Mar. 26, 1940 2,195,096

UNITED STATES PATENT OFFICE

2,195,096

IMITATION REED AND METHOD OF FORMING SAME

Wade E. Sackner and John E. Millett, Grand Rapids, Mich., assignors to Grand Rapids Fibre Cord Company, Grand Rapids, Mich.

Application September 16, 1939, Serial No. 295,178

8 Claims. (Cl. 93—84)

This invention relates to paper imitation reed and the method of forming the same. It has for its objects:

First, to produce a new and improved paper imitation reed of concavo-convex form.

Second, to provide such a reed formed of a folded strip of paper in which the seam comes substantially at the edge of the reed so that it is concealed from view when the reed is woven and does not scuff up during the use of the fabric or the like made from the reed.

Third, to provide such a reed which is so formed that it will retain its shape without the use of adhesive.

Fourth, to provide a new and improved method of making concavo-convex reeds.

Fifth, to provide a method by means of which a single strip of paper may be folded to form the concavo-convex reed with the seam substantially at the edge of the reed.

Sixth, to provide such a method in which the use of adhesive is eliminated.

Other objects and advantages pertaining to details and economies of construction and operation will appear from the description to follow. The invention is defined in the claims. A preferred embodiment of our invention is illustrated in the accompanying drawings, in which:

Fig. 1 is a perspective view, greatly enlarged, of a portion of a strip of reed made in accordance with our invention.

Fig. 2 is a sectional view showing the strip of paper employed in making the reed.

Fig. 3 is a sectional view of the strip of paper showing the first step in the formation of the reed.

Fig. 4 is a sectional view through the strip of paper showing the next step in the formation of the reed.

Fig. 5 is a sectional view showing the final step in the formation of the reed.

Fig. 6 is a view of apparatus employed in carrying out the invention, showing the folder for making the first fold.

Fig. 7 is a view showing the folder employed in making the second fold.

Fig. 8 is a view showing the method of applying water to the paper in process.

Fig. 9 is a sectional view showing the water applying wheel with the paper in position therein.

Fig. 10 is a view showing in cross section the forming rolls for the final step of the process.

Our new and improved reed 1 is made from a single strip of paper 2. The edges 3 and 4 are folded to a line indicated at 5 which extends longitudinally of the strip and is spaced from the center line of the strip. After this fold has been made, the paper is moistened and is then folded along the line 5 as shown in Fig. 4. It will be noted that the wider portion 6 of the strip formed by the fold on the line 5 has its upper edge 7 extending slightly beyond the free edge 8 of the narrower portion 9 formed by the fold along the line 5.

After the fold along the line 5, the paper strip is given a concavo-convex form shown in Fig. 5. The wider portion 6 formed by making the fold along the line 5 overlies the convex side 10 of the narrower portion 9 and the free edge 7 of the wider portion 6 is forced slightly around the free edge 8 of the narrower portion 9 to lock the pieces in position.

In Fig. 6, we show the folder 11 which makes the first fold in the strip 2. It is a conventional folder having wings 12. After the strip has been folded by the folder 11, it passes to a folder 13 which folds the strip along the line 5. The strip is continually advancing and is pulled through a die 14 forming part of the folder 13. The creasing is accomplished by the blade 15.

After the fold is made on the line 5, the strip passes to a wheel 16 to the surface of which water is applied. The water moistens the folder in edges 3 and 4 of the strip through contact as is best shown in Fig. 9. Thereafter the strips are folded together by the die 17 and then passed to forming wheels 18 and 19 which give the concavo-convex form.

It will be noted that the wider portion 6 formed by the folding on the line 5 extends beyond the free edge 8 of the narrower portion 9 formed by the fold 5. The final reed is somewhat narrower than the wide portion 6 formed by folding on the line 5 and it is the final pressing operation which gives this form that forces the free edge 7 of the portion 6 slightly around the free edge 8 of the narrower portion 9. The paper, being moist, retains its form and the overlap of the free edge 7 tends to hold the reed in its final form. The seam 20 lies substantially at the edge of the finished reed.

It will be apparent that the reed made in accordance with our invention is highly satisfactory because the seam 20 is not exposed when the reed is made up into fabric.

We have found that by following the method above described, it is possible to greatly increase the speed of manufacture. Whereas in the past it has been possible to produce only about 300 feet per minute of paper imitation reed where ad-

hesive is applied, we have been able to produce at the rate of 500 feet or more per minute.

The particular form given to the reed makes it possible to eliminate the use of adhesive and the application of water as we apply it tends to give the form permanence.

The terms and expressions which have been herein employed are used as terms of description and not of limitation, and there is no intention, in the use of such terms and expressions, of excluding any equivalents of the features shown and described, or portions thereof, but it is recognized that various modifications are possible within the scope of the invention claimed.

Having thus described our invention, what we claim as new and desire to secure by Letters Patent is:

1. A concavo-convex paper imitation reed comprising a paper strip having its edges folded to a longitudinal line one side of the center line of said strip and folded at said line with the folded edges inside the second fold, the wider of the top portions of the strip formed by the second fold forming the convex side of the reed and completely overlying the convex side of the narrower portion of the strip formed by said second fold, the free edges of said portions meeting substantially at the edge of the reed with the edge of the wider portion extending slightly beyond and partially around the edge of said narrower portion to lock said portions together.

2. A concavo-convex paper imitation reed comprising a paper strip having its edges folded to a longitudinal line one side of the center line of said strip and folded at said line with the folded edges inside the second fold, the wider of the two portions of the strip formed by the second fold forming the convex side of the reed and completely overlying the convex side of the narrower portion of the strip formed by said second fold.

3. The method of forming concavo-convex paper imitation reed comprising feeding a strip of paper, folding the edges thereof to a longitudinal line at one side of the center line of the strip, moistening the folded in portions of the strip, folding the paper along said longitudinal line to enclose the folded in portions of the paper, and then forming the folded strip into a concavo-convex form with the wider of the two portions of the strip formed by the second fold completely overlying the convex side of the narrower portion of the strip formed by said second fold.

4. The method of forming concavo-convex paper imitation reed comprising feeding a strip of paper, folding the edges thereof to a longitudinal line at one side of the center line of the strip, moistening the folded in portions of the strip, folding the paper along said longitudinal line to enclose the folded in portions of the paper, and then bending the folded strip into a concavo-convex form with the wider of the two portions of the strip formed by the second fold completely overlying the convex side of the narrower portion of the strip formed by said second fold with its free edge extending slightly beyond the free edge of said narrower portion and folding the free edge of said second edge partially around the free edge of said narrower portion.

5. The method of forming concavo-convex paper imitation reed comprising feeding a strip of paper, folding the edges thereof to a longitudinal line at the side of the center line of the strip, folding the paper along said longitudinal line to enclose the folded in portions of the paper and then forming the folded strip into a concavo-convex form with the wider of the two portions of the strip formed by the second fold completely overlying the convex side of the narrower portion of the strip formed by said second fold.

6. The method of forming concavo-convex paper imitation reed comprising feeding a strip of paper, folding the edges thereof to a longitudinal line at one side of the center line of the strip, folding the paper along said longitudinal line to enclose the folded in portions of the paper and then bending the folded strip into a concavo-convex form with the wider of the two portions of the strip formed by the second fold completely overlying the convex side of the narrower portion of the strip formed by said second fold with its free edge extending slightly beyond the free edge of said narrower portion and folding the free edge of said second edge partially around the free edge of said narrower portion.

7. The method of forming concavo-convex paper imitation reed comprising feeding a strip of paper, folding the edges thereof to a longitudinal line at one side of the center line of the strip, moistening the folded in portions of the strip, folding the paper along said longitudinal line to enclose the folded in portions of the paper, and then bending the folded strip into a concavo-convex form with the wider of the two portions of the strip formed by the second fold completely overlying the convex side of the narrower portion of the strip formed by said second fold with its free edge extending slightly beyond the free edge of said narrower portion, and forming from said folded strip a reed narrower than said wider portion whereby the free edge of said wider portion is forced slightly around the free edge of said narrower portion.

8. The method of forming concavo-convex paper imitation reed comprising feeding a strip of paper, folding the edges thereof to a longitudinal line at one side of the center line of the strip, folding the paper along said longitudinal line to enclose the folded in portions of the paper, and then bending the folded strip into a concavo-convex form with the wider of the two portions of the strip formed by the second fold completely overlying the convex side of the narrower portion of the strip formed by said second fold with its free edge extending slightly beyond the free edge of said narrower portion and forming from said folded strip a reed narrower than said wider portion whereby the free edge of said under portion is forced slightly around the free edge of said narrower portion.

WADE E. SACKNER.
JOHN E. MILLETT.