(No Model.) 3 Sheets—Sheet 1.

H. LEITNER.

ELECTRIC ARC LAMP.

No. 590,725. Patented Sept. 28, 1897.

Fig. 1.

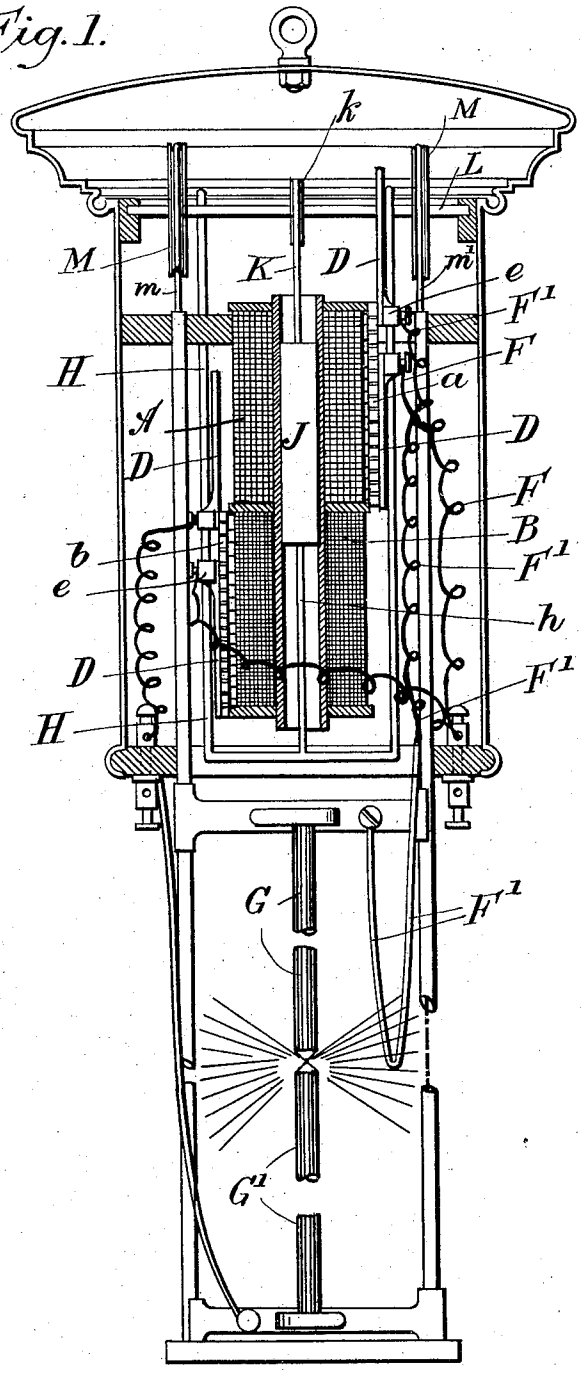

Witnesses
William James Bulgin
Albert Edward Ellen

Inventor
Henry Leitner
by his attorney
George Henry Rayner

THE NORRIS PETERS CO., PHOTO-LITHO., WASHINGTON, D. C.

(No Model.) 3 Sheets—Sheet 2.

H. LEITNER.

ELECTRIC ARC LAMP.

No. 590,725. Patented Sept. 28, 1897.

Fig. 2.

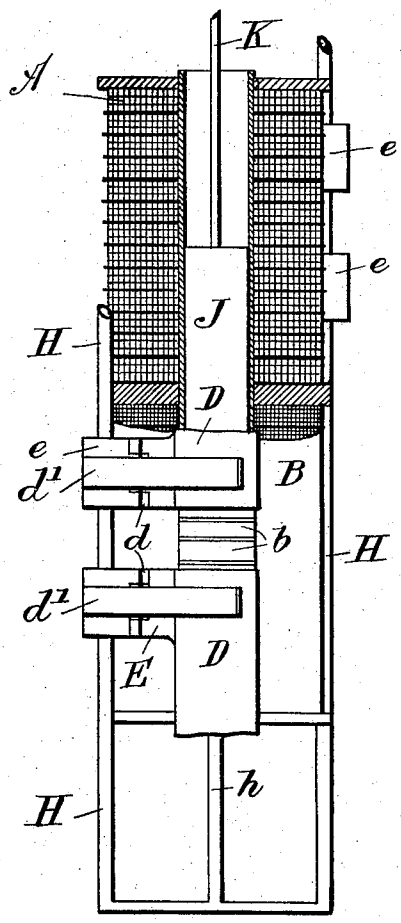

Fig. 3.

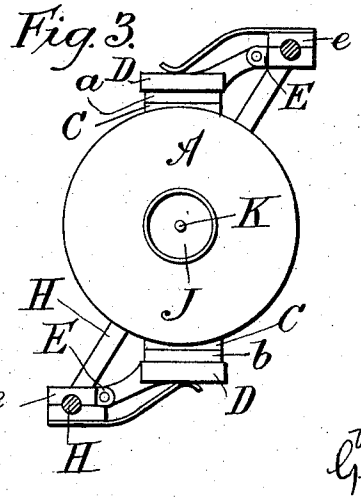

Witnesses
William James Bulgin
Albert Edward Ellen

Inventor
Henry Leitner
by his Attorney
George Henry Rayner

THE NORRIS PETERS CO., PHOTO-LITHO., WASHINGTON, D. C.

(No Model.) 3 Sheets—Sheet 3.

H. LEITNER.

ELECTRIC ARC LAMP

No. 590,725. Patented Sept. 28, 1897.

Fig. 4

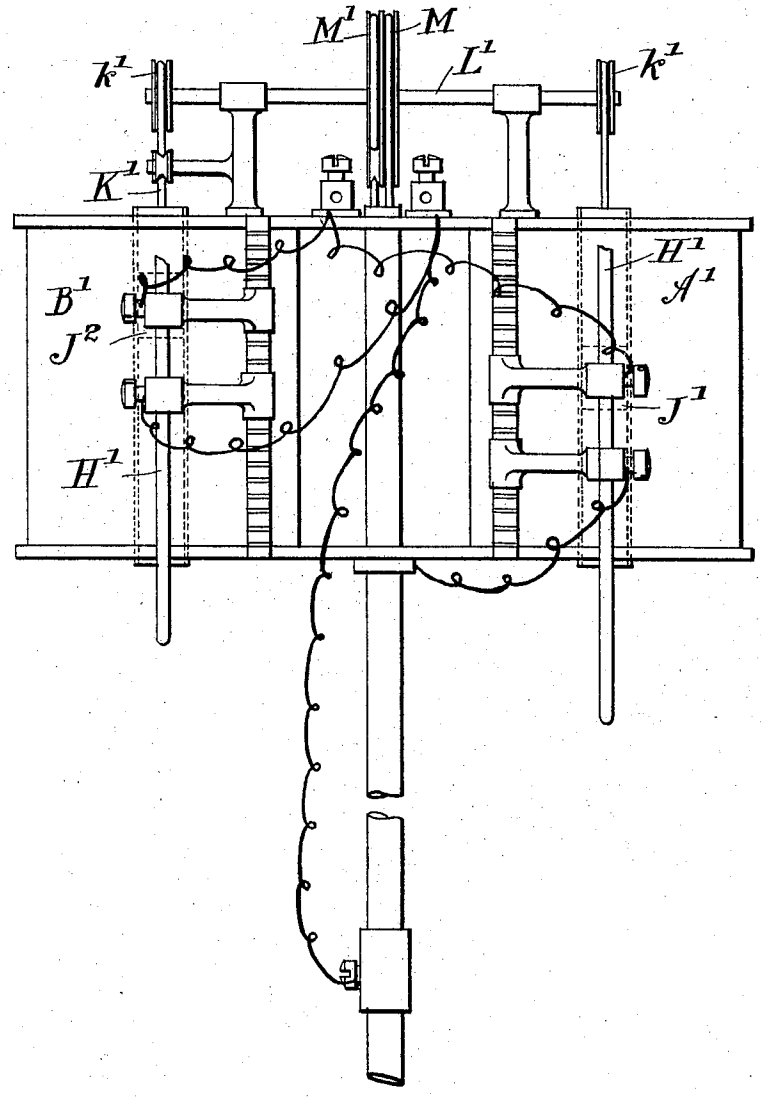

Witnesses
William James Bulgin
Albert Edward Ellen

Inventor
Henry Leitner
by his Attorney
George Henry Rayner

THE NORRIS PETERS CO., PHOTO-LITHO., WASHINGTON, D. C.

UNITED STATES PATENT OFFICE.

HENRY LEITNER, OF LONDON, ENGLAND.

ELECTRIC-ARC LAMP.

SPECIFICATION forming part of Letters Patent No. 590,725, dated September 28, 1897.

Application filed April 16, 1897. Serial No. 632,442. (No model.)

To all whom it may concern:

Be it known that I, HENRY LEITNER, philologist, a subject of the Queen of Great Britain and Ireland, residing at 207 Piccadilly, London, England, have invented certain new and useful Improvements in the Construction of Arc-Lamps, of which the following is a specification.

This invention relates to improvements in the construction of arc-lamps, and has for its object to provide a simple arrangement which will insure a constant feed for the carbon and one which will at the same time regulate the arc with great accuracy and give a constant focus.

The device I propose to employ for this purpose consists of two coils or solenoids, one coil being in series with the lamp and the other in shunt-circuit. These coils are placed one above the other or side by side, and a central iron core is placed within the coils about one-quarter greater in length than one of the said coils when the latter are arranged one above the other. This core is connected to the mechanism by which the carbons are adjusted, and in order to magnify or increase the motion so that a small distance traveled by the core will move the carbons a much greater distance a line or connection from the core passes over a small wheel carried on a shaft or spindle at the top of the lamp. On each side of the spindle larger wheels are employed, connections passing, respectively, to the upper and lower carbons being wound on the said wheels. The connections are wound in opposite directions, so that on turning the spindle in one direction the carbons are caused to approach one another and on turning in the reverse direction they are separated.

To allow for the different rate at which the upper and lower carbons burn in the case of continuous currents, the wheels or drums connected with the carbons are of correspondingly different sizes, insuring a constant focus for the light.

To raise and lower the core, and consequently to adjust the carbons, the coils are made in a peculiar manner. Instead of forming simple coils, both the series and shunt coils are made in sections and provided with a number of contact-bars insulated from each other, but placed as close together as possible. I prefer to use about four of these contact-bars to the inch; but they may be arranged more closely if found desirable. The arrangement somewhat resembles the commutator of a dynamo, and to each bar one of the coils on the solenoid is connected, the wire between each section, instead of being wound directly on the bobbin, being drawn out or looped and connected to the bar. The core is thus divided into a series of single coils or sections corresponding to the number of contact-bars, each section being capable of acting independently, but connected to the next. On connecting up any two of these bars the current will be caused to pass through those sections only which lie between the bars thus connected, the rest of the coil being inoperative.

To form the contact where the coils are placed one above the other, a frame is employed carried in suitable bearings and connected to the core. On this frame two contact pieces or brushes for each of the two coils are fitted insulated from each other, and the two pairs are placed at corresponding points with relation to the coils to which they are applied. The complete frame and brushes move along with the iron core, the ends of the latter being situated between the two brushes of each pair. Where the solenoids are side by side, two frames independent of each other are used, each being connected to its core. The coils pull in opposite directions, and the winding on the shunt-coil is arranged so that the pull on the central core balances the pull from the series coil when the carbons are in the best position for the arc.

On the current being turned on, supposing that the carbons are in contact, the current will pass only through the series coil or through that section of it situated between the two brushes, the shunt-coil being practically short-circuited. As the core is not situated centrally with relation to the part of the coil rendered active, it will be moved, carrying the frame along with it and shifting the brushes to another set of bars. This instantly separates the carbons and at the same time, owing to the increased resistance, allows the current to pass through the shunt-coil, pulling the core in the opposite direction.

If the carbons are apart before the current passes, the action is reversed, bringing the carbons together. The core and connecting parts move until the resistance of the arc causes the current passing through the series and shunt coils to balance, when the parts become stationary. As the carbons gradually burn away and thus tend to lengthen the arc and increase the resistance the balance of the current is disturbed, but is instantly righted by the brushes moving so as to include different sets of coils, the action being continuous and allowing for very slight variations of current. Any irregularity in the carbons or in their rate of burning is allowed for, the action entirely depending on the current, and at the same time no complicated parts are required, the connections being all of the simplest kind. With coils constructed in this peculiar manner an even and strong pull is obtained, as the core is always in the same position relatively to the active solenoid and always at the most advantageous point. At the same time a much greater travel is obtained for the same length of coil than with coils wound in the ordinary continuous manner, as in the latter case the pull ceases on the core taking up a central position. There is also no jerking when the current is turned on.

In order that the invention may be more clearly understood, reference is had to the accompanying sheets of drawings, in which—

Figure 1 shows one form of my apparatus in side elevation. Fig. 2 is an elevation at right angles to Fig. 1. Fig. 3 is a plan, and Fig. 4 shows a modified arrangement with the coils placed side by side.

Referring to Figs. 1, 2, and 3, the series and shunt coils A and B are placed one above the other, the series coil A in the arrangement shown being at the top. Both these coils are, as shown, wound in a number of different sections, each section being separately connected to one of the contact-bars *a* or *b*, the contact-bars *a* belonging to the series coil and *b* to the shunt. The wire in each case after forming a loop connected to the corresponding bar continues to form the next section of the coil, so that while the sections are independent all those in one coil are permanently connected up in series. The contacts *a* and *b* are supported on bars C, which may be of insulating material or provided with an insulating-surface on which the contacts are placed. Each bar is insulated from the next, so that a current can be introduced through any one of the contacts independently of the others. To form a circuit through the series coil, the brushes D are employed, these being preferably made of L shape and hinged at *d* to an arm E, screwed or otherwise fixed to a block *e* of insulating material. A spring *d'* bears on the top of the brush, so that it is caused to press on the contacts *a*. The two brushes shown are separated from each other by an interval sufficiently large to include several of the sections of the coil. The connections F and F' pass to these brushes respectively from the main and to one of the carbons. At the same time the ends of the coils are connected to the same terminals. On the current passing through the brushes, owing to all the sections covered by them being short-circuited, the current will only pass through that portion of the coil situated between the two brushes, but should they by any accident be momentarily raised from the surface of the contacts the circuit will not be broken, but will simply pass through the complete coil. Also should the connection to either of the brushes be broken the current will not be impeded in any way, as it will proceed through the brush which short-circuits all the sections, thus entirely obviating any danger of the parts getting out of order.

The arrangement is precisely similar for the shunt-coil, brushes D being provided supported by the insulating-blocks *e*. These blocks are carried on the frame H, this frame consisting of two arms or rods extending on each side of the coils, the blocks *e* for the shunt-coil being placed lower than those for the series coil, but in corresponding position with respect to the sections or contact-bars *b*. The strength of the series and shunt coils can be relatively varied to any required extent by shifting the position of the brushes or contact-pieces on the frame. This is an important feature of the special method of winding employed. The frame is provided with a central rod *h*, which is connected to the central iron core J, this core extending within the coils A and B, and being preferably slightly longer than one of the coils. The ends of the core are situated within the excited sections of the coils, the core being fixed at the proper height with respect to the frame. The frame, core, and brushes are thus all fixed relatively to one another, so that when the core moves the other parts will correspondingly move, shifting the positions of the active sections.

From the upper end of the core a cord or connection K extends, passing over the drum or wheel *k* on the shaft L. This shaft or spindle is fixed at the top of the lamp and the wheel or drum *k* is placed at the center. At each side of this wheel the drums M and M' are placed, over which the connections *m* and *m'* are wound in opposite directions, these connections passing, respectively, to the supports for the upper and lower carbons G and G'. Thus on the core moving the spindle will be revolved and the drums M and M' will turn, causing the carbons to approach toward or recede from each other. The weight of the parts will be sufficient to bring the carbons together when the core is moved, so as to lessen the pull on the connection K, the magnetic pull on the core separating the carbons, so that the core only requires to exercise a direct pull in one direction.

Referring to Fig. 4, the same principle is employed, but instead of the coils being placed one above the other the series and shunt coils A′ and B′ are placed side by side. Two frames H′ are employed and also two cores J′ and J², one for the series and the other for the shunt coil. These cores are considerably shorter than the single one employed in the arrangement before described, and each core is provided with a connection K′, passing to a wheel or drum *k*′ on the shaft L′. These connections are wound in opposite directions, so that one cord descends as the other rises, both acting on the spindle and causing it to turn in corresponding directions. The drums M and M′ are in this case placed at the center of the spindle and the connections to the carbons may pass between the two coils. In this arrangement only one side of the frames H is actually used to carry the contact-strips, the other side bearing against the side of the coil or other suitable part in order to keep the frame in a level position. The arrangement of coils placed side by side possesses the advantage that there is a pull in both directions, the action thus being quite independent of the weights of the various parts. The pull on the core belonging to the series coil always tends to move the carbons apart and that on the other core to bring them together. The pull on both cores is in a downward direction and is the same at all points, so that even at the beginning of the operation when the lamp has been supplied with new carbons and the core of the series coil is almost at its lowest point it will use the small travel remaining to it with full force to draw the carbons apart. The connections to the carbons are thus always kept taut, as there is always a pull from both cores.

Instead of forming the contact-strips of considerable length, so as to short-circuit most of the sections of the coil, I may make them of sufficient size only to cover two of the contact-bars at one time, as shown in Fig. 4. Connections are made in this case only to the brushes and not to the ends of the coils, so that the current will pass as before only through those sections situated between the brushes. This arrangement is similar in all other respects to that already described and the action of the coils is precisely the same.

What I claim as my invention, and desire to secure by Letters Patent, is—

1. In an improved feeding mechanism for arc-lamps, the combination with a series and shunt coil constructed from a number of independent sections and contact-bars insulated from each other and connected to each of the said sections, of an iron core in the said coils, a frame connected to the said core and brushes on the frame for each coil, these brushes bearing on the contact-bars leading the current through corresponding sections, and connections to the carbons causing them to move with the core, substantially as described and for the purposes specified.

2. In feeding mechanism for arc-lamps, the combination of a series and shunt coil, each coil wound in independent sections, and two sets of contact-bars one for each coil, each contact-bar being connected to a section of the coil to which it belongs, an iron core within the said coils, a frame to which the core is attached and two sets of brushes one set for each coil, bearing on the contact-bars, with a spindle having a drum or wheel a connection from the core passing over the said drum, and two drums or wheels on the same spindle connected respectively to the upper and lower carbons, substantially as and for the purposes specified.

3. In feeding mechanism for arc-lamps, the combination of a series and shunt coil one above the other, each coil being wound in a series of independent sections, and two sets of contact-bars one to each coil, each contact-bar being insulated from the next and connected to one of the said contacts with a central iron core placed within the said coils, a frame extending on each side of the coils carrying the core, two sets of brushes carried by the sides of the frame bearing on the contact-bars leading the current through a constant number of sections, and connections from the core to the carbons causing them to move with the core and frame, substantially as and for the purposes specified.

4. In feeding mechanism for arc-lamps the combination of a series and shunt coil placed one above the other each coil wound in a number of independent sections, two sets of contact-bars one for each coil each contact-bar being connected to a section, a central iron core, a frame carrying the core extending on each side of the coil, and two sets of brushes on the frame, bearing on the contact-bars, with a spindle at the top of the lamp, a drum at the center of the said spindle, a connection passing over the said drum to the core, side drums or wheels on the same spindle and connections, wound in opposite directions on these wheels, passing to the carbon-holders causing them to move with the core and frame substantially as described and shown and for the purposes specified.

5. In feeding mechanism for arc-lamps, the combination with a series and a shunt coil, each coil wound in a number of independent sections, and a set of contact-bars for each coil connected independently to the sections, of an iron core, a frame carrying the core, two sets of brushes, adapted to bear on the contact-bars, short-circuiting all the sections except those in the gap between the brushes, electrical connections to the brushes and to the end of the coils, and connections from the core to the carbons, substantially as and for the purposes specified.

6. In feeding mechanism for arc-lamps, the combination of a series and shunt coil placed

side by side and wound in independent sections, and a set of contact-bars for each coil, each bar connected to a section, with a central iron core in each coil, a frame connected to each core, brushes on each frame bearing on the contact-bars and connections from the cores to the carbons, substantially as described and shown and for the purposes specified.

7. In feeding mechanism for arc-lamps the combination with a series and a shunt coil wound in a series of independent sections and placed side by side, a set of contact-bars for each coil each bar connected to a section, of a frame fitted to each coil, a core carried by each frame, two brushes on the frame situated at the lower ends of the cores a spindle carrying drums or wheels, connections from the cores passing over the wheels in opposite directions, and connections to the upper and lower carbons, substantially as described and shown in Fig. 4 and for the purposes specified.

In witness whereof I have sworn to set my hand in the presence of two witnesses.

HENRY LEITNER.

In presence of—

ALBERT EDWARD ELLEN,
PHILIP DENIS IONIDES.