(19) **Octrooicentrum Nederland**

(11) **2018716**

(12) B1 **OCTROOI**

(21) Aanvraagnummer: **2018716**

(22) Aanvraag ingediend: **13/04/2017**

(51) Int. Cl.:
F24F 1/02 (2018.01) **F24F 1/38** (2018.01) **F24F 1/56** (2018.01) **F24F 13/20** (2018.01) **F04D 25/12** (2018.01) **F24F 13/24** (2018.01)

(30) Voorrang:
31/01/2017 NL N2018271

(41) Aanvraag ingeschreven:
16/08/2018

(43) Aanvraag gepubliceerd:
-

(47) Octrooi verleend:
16/08/2018

(45) Octrooischrift uitgegeven:
21/08/2018

(73) Octrooihouder(s):
ADG Dynamics B.V. te Bergen.

(72) Uitvinder(s):
Frederik Gooijer te Bergen.
Matthijs Leegwater te Twisk.

(74) Gemachtigde:
ir. A. van der Maarl te Utrecht.

(54) **CABINET FOR HOUSING PART OF A HEAT PUMP**

(57) A heat pump is known for cooling or heating the inside of a house or an office or water. Part of the heat pumps is installed outdoors exposed to weather influences. The invention provides a cabinet for housing a heat exchanger and a ventilator of a heat pump. The cabinet is arranged to shield the ventilator of the heat pump from weather influences, thereby extending the life-time of the ventilator and thus the heat pump.

Dit octrooi is verleend ongeacht het bijgevoegde resultaat van het onderzoek naar de stand van de techniek en schriftelijke opinie. Het octrooischrift komt overeen met de oorspronkelijk ingediende stukken.

CABINET FOR HOUSING PART OF A HEAT PUMP

FIELD OF THE INVENTION

The invention relates to the field of cabinets for housing a heat exchanger and a ventilator of a heat pump and for fitting in a side of a structure and a heat pump system.

BACKGROUND OF THE INVENTION

A heat pump is known for cooling or heating the inside of a house or an office. A heat pump may also be used for heating or cooling water.

A heat pump transfers heat from one location to another location. The transfer of heat is done by a medium, which is either a vapour or a liquid. The temperature difference between the locations is bridged by condensing and evaporating the medium with the help of a compressor and an expansion valve.

Known heat pumps have an outdoor unit placed next to a building or house and an indoor unit placed inside the building or house. The known heat pump has an outdoor and an indoor unit, which both can function as an evaporator and a condenser. If the heat pump is cooling the inside of a house, the outdoor unit is the condenser and the indoor unit is the evaporator. If the heat pump is heating the inside of a house, the outdoor unit is the evaporator and the indoor unit is the condenser.

The outdoor unit needs to be able to withstand the weather. Especially the ventilator is vulnerable to moist, rain, downpour or even snow and ice. A disadvantage of the outdoor unit of the known heat pump is that it requires shielding the ventilator from weather influences.

SUMMARY OF THE INVENTION

An object of the invention is to provide a simpler shielding for an outdoor unit of a heat pump for extending the life-time of the heat pump.

According to a first aspect of the invention, a cabinet for housing a heat exchanger and a ventilator of a heat pump influencing a temperature inside a structure, comprising: a partitioning element arranged for partitioning the cabinet in a first chamber and a second chamber; an inlet opening for allowing air from outside the structure to flow into the first chamber; an outlet opening for allowing air from inside the second chamber to flow to the outside of the structure; and a passage in the partitioning element for arranging the ventilator in the passage for generating an airflow

from the first chamber to the second chamber and along the heat exchanger, wherein, when the cabinet is installed, the passage is positioned outside the direct perpendicular of the inlet opening and/or the outlet opening.

A heat pump is a device that transfers heat energy from a source of heat to a destination called a "heat sink". Heat pumps are designed to move thermal energy in the opposite direction of spontaneous heat flow by absorbing heat from a cold space and releasing it to a warmer one. A heat pump uses a small amount of external power to accomplish the work of transferring energy from the heat source to the heat sink.

While air conditioners and freezers are familiar examples of heat pumps, the term "heat pump" is more general and applies to many HVAC (heating, ventilating, and air conditioning) devices used for space heating or space cooling. When a heat pump is used for heating, it employs the same basic refrigeration-type cycle used by an air conditioner or a refrigerator, but in the opposite direction, thus releasing heat into the conditioned space rather than the surrounding environment. In this use, heat pumps generally draw heat from the cooler external air.

In heating mode, heat pumps are three to four times more efficient in their use of electric power than simple electrical resistance heaters. Typically, installed cost for a heat pump is about 20 times smaller than for resistance heaters.

A heat pump typically comprises at least two heat exchangers and a ventilator. The first heat exchanger is for heating or cooling a space in a structure, such as a house or building. The second heat exchanger is placed in contact with outside air for releasing heat to the outdoors or for drawing heat from the outdoors for respectively cooling or heating the space in the structure. The ventilator is arranged to the second heat exchanger to generate an air flow over or along the second heat exchanger for optimizing the heat exchange between the second heat exchanger and the outside air.

The invention provides a cabinet for housing the second heat exchanger and the ventilator of the heat pump. Further, this cabinet is fitted in a side of the structure, preferably the cabinet is fitted in an angled roof of the structure.

The cabinet comprises a partitioning element arranged for partitioning the cabinet in a first chamber and a second chamber. Further, the cabinet comprises an inlet opening for allowing air from outside the structure to flow into the first chamber and an outlet opening for allowing air from inside the second chamber to flow to the outside of the structure. The cabinet also comprises a passage in the partitioning element for arranging the ventilator in the passage for generating an airflow from the

first chamber to the second chamber and along the heat exchanger. These features together provide a path for the outside air over or along the second heat exchanger. The flow of the air along this path is typically stimulated by a ventilator. By arranging the ventilator in the passage, false air circulation is prevented. The effect of the first and second chamber is that the ventilator of the heat pump, when positioned in the passage, is placed at some distance from the inlet and outlet openings, respectively.

Further, the cabinet comprises the feature, when the cabinet is installed, that the passage is positioned outside the direct perpendicular of the inlet opening and the outlet opening.

The perpendicular for a point is defined as the perpendicular line or lead line from that point extending downward. The direct perpendicular for a point has as additional limitation that it ends at a position striking a physical object, thereby defining a line section. The direct perpendicular for an area, such as an opening, is defined as a collection of perpendiculars for points in the area. Thus, the direct perpendicular for an area is a column formed by the projection of this area along the perpendicular downwards. For a vertical oriented opening this column becomes a surface.

The further effect of positioning the passage outside the direct perpendicular of the inlet opening and the outlet opening is that weather influences, such as rain or snow, falling straight down, do not come into contact with the ventilator.

The combined effects of the features according to the invention is to shield the ventilator, when arranged in the passage, from weather influences for extending the life-time of the heat pump.

In an embodiment of the cabinet, the passage is spaced at some distance from the perpendicular, such that, when rain or snow is falling down under an angle, the ventilator, positioned in the passage, is still not coming in contact with the ventilator. This embodiment advantageously provides shielding in windy weather conditions.

In an embodiment of the cabinet, the partitioning element comprises adapting means for adapting the passage to the size of the ventilator. This provides the advantage that ventilators of different size may be fitted in the passage. This also provides the advantage of minimizing false wind circulating back from the second chamber to the first chamber via the passage when the ventilator is arranged in the passage.

In an embodiment of the cabinet, the adapting means comprise a flexible skirt. This provides the advantage of easily adapting the size of the passage to the size of the ventilator.

In an embodiment of the cabinet, the adapting means comprise an insert. This provides the advantage of easily adapting the size of the passage to the size of the ventilator.

In an embodiment of the cabinet, the adapting means comprise a cutline for cutting away a part of partitioning element. This provides the advantage of easily adapting the size of the passage to the size of the ventilator.

In an embodiment of the cabinet, the adapting means comprise a combination of at least two of the group of a flexible skirt, a cutline for cutting away a part of partitioning element or an insert. This provides the advantage of easily adapting the size of the passage to the size of the ventilator.

In an embodiment of the cabinet, the cabinet comprises fitting means for fitting the cabinet in a side of the structure. The fitting means may provide heat isolation and/or prevent weather influences, such as snow, ice, rain or hale, to enter the structure creeping along the outside of the cabinet. The fitting means may comprise lead or tar slabs. The fitting means may be comparable or equal to the fitting means for a dormer or gable window. In a preferred embodiment, the fitting means comprise environmental friendly lead substitutes, such as terne coated steel or a suitable polymer.

In an embodiment of the cabinet, the cabinet comprises walls, which are at least partly isolated to prevent direct heat exchange between air in the interior of the cabinet and the inside of the structure. Structures, especially houses, are more and more isolated to conform to regulations. When the cabinet is placed in the side or roof of a structure, the isolation of this side or roof is breached. Therefore, the cabinet advantageously provides the same or better isolation for isolating the interior of the structure.

In an embodiment of the cabinet, the fitting means are for arranging the cabinet to an angled roof. In structures, especially houses, having an angled roof, the central heating system is typically placed under the angle roof. A heat pump may be connected to the central heating system of the structure for assisting or even replacing the central heating system in generating heat improving the efficiency of the central heating system. To shorten the piping between the heat pump and the central heating system, the heat pump is preferably positioned close to the central heating system.

And to shorten the piping between the indoor and outdoor unit of the heat pump, these two units are also arranged close to each other. The outdoor unit of the heat pump is therefore advantageously arranged in a cabinet with fitting means for arranging the cabinet in an angled roof to shorten piping of the heat pump and/or the central heating system.

In an embodiment of the cabinet, the cabinet comprises a service hatch arranged for allowing access to the interior of the cabinet from within the structure. The hatch defines an open position, wherein the hatch provides an opening providing access to the inside of the cabinet. This hatch opening may provide access to the interior of the cabinet. The hatch opening advantageously allows, for example, service personnel to service the outdoor unit of a heat pump from inside the structure. Hereby preventing complex safety measures for servicing the cabinet from outside the structure.

In an embodiment of the cabinet, the cabinet comprises a condensate drip tray for collecting condensate from the heat exchanger and air in the first and/or second chamber. It is highly likely that condensate or even ice may form on the heat exchanger. Condensate is advantageously collected in the cabinet to prevent water damage to the structure.

In a further embodiment of the cabinet, the condensate drip tray also comprises a drain for advantageously draining condensate from the cabinet and dispose of the condensate in a defined way. The condensate may then be drained to a sewage system. Preferably, the drain is isolated or provided with a plug to prevent direct heat exchange between air in the interior of the cabinet and the inside of the structure.

In an embodiment of the cabinet, the inlet opening and the outlet opening are spaced at a distance for prohibiting air expelled from the outlet opening to enter the cabinet again via the inlet opening. Circulation of outside air through the cabinet negatively influences the coefficient of performance. Spatial spacing the inlet opening and outlet opening provides the advantage of preventing the outside air to circulate through the cabinet thereby positively influencing the coefficient of performance.

In a further embodiment of the cabinet, the outlet opening is spaced at a distance from the side of the structure. This provides the advantage minimizing air circulation. Preferably the outlet opening should not extend beyond a gutter or overhang of a structure. As the outlet opening typically expels cold air, icicles may build up over time close to the outlet opening. The outlet opening may be connected to

the second chamber of the cabinet through a channel. Another measure may be to slightly tilt the channel with the outlet opening as the high end, thereby advantageously allowing condensate to flow back to the second chamber instead of building up as icicles close to the outlet opening.

According to another aspect of the invention a heat pump system for heating or cooling a structure comprising: a first heat exchanger for heating or cooling a space; a second heat exchanger; a ventilator arranged to the second heat exchanger for generating an air flow over the second heat exchanger; and a cabinet according to any of the preceding embodiments housing the second heat exchanger and the ventilator.

In a further embodiment of the heat pump system, the ventilator is an axial ventilator. An axial pump advantageously moves large volumes of air for letting a large volume of air flow along or over the heat exchanger.

In a further embodiment of the heat pump system, the space is an internal space of the structure for changing the air temperature of the internal space or an interior space of a water container, such as a boiler, for changing the water temperature in the water container. The energy, which is either in the form of heat or cold, transferred from the outdoor unit to the indoor unit of the heat pump is advantageously used for changing the temperature of an internal space directly or indirectly via a boiler. The energy may also be used as warm water, for example to shower, bath or use in a dishwasher or washing machine.

In an embodiment of the heat pump system, the heat pump comprises a compressible medium transporting the heat for operating with outdoor temperatures above -25 degrees Celsius. This provides the advantage of providing a workable system at most populated locations in the world.

In a further embodiment of the heat pump system, the first heat exchanger comprises a radiator. A radiator is a common element in a structure, such as a house, advantageously lowering the acceptance threshold of introducing a heat pump system according to the invention.

In a further embodiment of the heat pump system or cabinet, the structure is a house, a row house, a serial house, a town house, terraced house, linked house, corner house, a cabin, an office, a flat and/or a shed.

In a further embodiment of the heat pump system or cabinet, the heat pump system or cabinet comprises a frame, which is rugged and stiff enough to hold a windmill. Further means may be provided to attach the windmill. The windmill may

advantageously generate electricity, for example to drive the ventilator arranged in the passage of the cabinet. Alternatively, the windmill may generate mechanical energy directly driving the ventilator arranged in the passage of the cabinet. Alternatively, the windmill may generate electricity for feeding back to the power grid. Alternatively, the windmill may combine any of the previous alternatives.

Typically, the second heat exchanger is on the roof or high on a side structure making the second heat exchanger difficult accessible to service personal. A typical safety measure for service personal is the use of a life line, which is often neglected. The so created unsafety may be solved by having the service panel accessible from inside the structure.

The effect of the service panel of the second heat exchanger is that the inside of the structure is accessible. The effect is that the ease of servicing as well as the safety is improved.

A known heat pump needs to be serviced at regular intervals. The indoor unit of the known heat pump is normally easily accessible. As the ground space around the house or building is normally scarce, the outside unit of the known heat pump is often attached at an elevated location to the outside of a house or building to preserve the ground space for other uses. This elevated location requires additional safety measures for the service personal, such as a scaffold, safety line, safety harness and/or ladder.

A disadvantage of the outside unit of the known heat pump is that servicing this outside unit introduces a risk.

An object of the invention is to provide a solution for safer servicing an outside unit of a known heat pump.

BRIEF DESCRIPTION OF THE DRAWINGS

The invention will be apparent from and elucidated further with reference to the embodiments described by way of example in the following description and with reference to the accompanying drawings, in which:

Figure 1 schematically shows a perspective view of a house fitted with a cabinet according to the invention;

Figure 2 schematically shows a cross-section of a roof and a first embodiment of a cabinet according to the invention;

Figure 3 schematically shows a cross-section of a roof and a second embodiment of a cabinet according to the invention;

Figure 4 schematically shows a cross-section of a third embodiment of a cabinet according to the invention installed in a side-wall 3 of a structure;

Figure 5 schematically shows a cross-section of a roof and a fourth embodiment of a cabinet according to the invention;

Figure 6A schematically shows a cross-section of a first embodiment of a partitioning element;

Figure 6B schematically shows a cross-section of a second embodiment of a partitioning element; and

Figure 6C schematically shows a cross-section of a third embodiment of a partitioning element.

The figures are purely diagrammatic and not drawn to scale. In the figures, elements which correspond to elements already described may have the same reference numerals.

LIST OF REFERENCE NUMERALS

1	house
2	roof
3	side wall structure
50	outdoor unit
51	heat exchanger
52	ventilator
53	housing
100	cabinet
110	partitioning element
111	passage
118	first chamber
119	second chamber
120	inlet opening
121	inlet lamellae
130	outlet opening
131	outlet lamellae
132	outlet channel
133	overhang
134	end stop

140	side wall cabinet
141	hatch, closed position
142	hatch, open position
150	condensate drip tray
151	condensate drip tray side
152	condensate drip tray drain
160	flexible skirt
170	first insert
173	second insert
180	first cutline
181	second cutline
182	third cutline
A	directions movable hatch
p1	first direct perpendicular
p2	second direct perpendicular
p3	third direct perpendicular
p4	fourth direct perpendicular
s1	entrance plane passage
s2	exit plane passage
v3	vertical plane
d1	distance first direct perpendicular and the passage
d2	distance second direct perpendicular and the passage
d3	distance third direct perpendicular and the passage
d4	distance fourth direct perpendicular and the passage

DETAILED DESCRIPTION OF EXEMPLARY EMBODIMENTS

The following figures may detail different embodiments.

Figure 1 schematically shows a perspective view of a house 1. The house comprises a roof 2, which is fitted with a cabinet 100 according to the invention. The plane II defines a cross-section and viewing direction for the figures 2, 3 and 5.

Figure 2 schematically shows a cross-section defined by line II in figure 1 of a roof 2 and a first embodiment of a cabinet 100 according to the invention.

The cabinet comprises side walls 140 and a partitioning element 110 arranged inside the cabinet. The partitioning element partitions the cabinet in a first

chamber 118 and a second chamber 119. The partitioning element defines a passage 111.

A heat pump typically comprises an indoor and an outdoor unit. This type of heat pump may be called a split heat pump. The outdoor unit typically comprises a ventilator 52 and a heat exchanger 51. The ventilator is arranged in the passage for blowing area from the first chamber to the second chamber.

The heat exchanger may be arranged in the first or second chamber. When the heat pump is transferring heat from the outdoors to the indoors of a structure, outdoor air is cooled by the heat exchanger extracting heat from the outdoor air. The water in the outdoor air may condensation or even deposition after heat is extracted. Therefor to prevent condensate or deposition on the ventilator and thereby negatively influencing the lifetime of the ventilator, it is typical to arrange the ventilator upstream from the heat exchanger.

The cabinet further defines an inlet opening 120 for allowing air from outside the structure to flow into the first chamber. The cabinet further comprises inlet lamellae 121 arranged in the inlet opening to advantageously reduce weather influences reaching the ventilator.

The cabinet further defines an outlet opening 130 for allowing air from inside the second chamber to flow to the outside of the structure. The cabinet further comprises a channel 132 joining the outlet opening and the second chamber. The channel advantageously allows the outlet opening to be positioned away from the roof.

As air expelled from the outlet opening may condensate or even deposit, icicles may form at the underside of the channel. The channel of the installed cabinet may therefore be selected such that icicles fall onto the roof or gutter.

The cabinet further comprises a condensate drip tray 150 arranged at the inside of the cabinet and formed by side walls 140 and a protrusion labelled condensate drip tray side 151. The condensate drip tray collects the condensate and may extend over the bottom of the first and/or second chamber. The condensate drip tray may further comprise a condensate drip tray drain for draining the condensate from the cabinet. The condensate drip tray drain prevents to have to service the inside of the cabinet regularly to service to remove the condensate in the form of water.

The cabinet further comprises a hatch, which is movable along arrow A between an open position 141 and closed position 142. In the closed position the hatch is part of the side wall of the cabinet preventing air from escaping through the hatch opening. In the open position the hatch provides a hatch opening providing access to

the inside of the cabinet. This hatch opening may provide access to the second chamber and/or the first chamber. The hatch opening advantageously allows, for example, service personnel to service the heat exchanger and/or ventilator from inside the structure. Hereby preventing complex safety measures for servicing the cabinet from outside the structure.

Alternatively, the hatch may be removable when not in the closed position. This provides the advantage of unobstructed access to the inside of the cabinet.

The installed cabinet further defines a first direct perpendicular p1 for the inlet opening and a second direct perpendicular p2 for the outlet opening. Although the perpendiculars only extend from the respective opening downwards, for clarity reasons only the perpendiculars are extended upwards as well. The installed cabinet further defines a plane v3, which is vertical in this embodiment. Further, a first distance d1 is defined as the shortest horizontal distance between the passage and the first direct perpendicular p1. This first distance reduces the possibility of weather influences, such as rain, snow, ice or hail, reaching the ventilator of the outdoor unit of the heat pump and thereby has the effect of enhancing the lifetime of the outdoor unit and thus of the heat pump. This effect is further improved in this embodiment by the inlet lamellae.

The second direct perpendicular reaches at the outlet opening from the top of the channel to the bottom of the channel. The passage reaches approximately from the top of the ventilator to the bottom of the ventilator. Although the second distance d2 is defined as the shortest distance in a straight line between the second perpendicular and the passage, this is not possible from the second direct perpendicular. Thus, the outlet opening is not allowing weather influences to reach the outdoor unit, and thus is not influencing the lifetime of the outdoor unit and may be neglected in this embodiment.

In a preferred embodiment, the effect of reducing the possibility of weather influences is reached for not only the ventilator, but also for the heat exchanger or even for the outdoor unit as a whole. This effect extends the life-time of the heat pump.

Furthermore, weather influences may have a negative effect on the performance of the heat pump. Water or ice formed on the heat exchanger 51 may hamper heat exchange. Therefore, another advantageous effect of reducing the possibility of weather influences reaching the ventilator, the heat exchanger or the outdoor unit as a whole is that the performance of the heat pump is enhanced.

The plane IV defines a cross-section and viewing direction for figure 6.

Figure 3 schematically shows a cross-section defined by line II in figure 1 of a roof 2 and a second embodiment of a cabinet 100 according to the invention.

Reference numbers in figure 3 which are equal to reference numbers in figure 2 refer to the same features. Also, equal effects are reached by features with equal reference numbers. Only the reference numbers and features which are different from figure 2 will be discussed.

The cabinet 100 comprises an outlet channel 132 projecting from the cabinet creating an overhang 133. The overhang has the effect of further reducing weather influences reaching the ventilator via not only the outlet opening 130, but also via inlet opening 120.

The outlet opening 130 of the outlet channel is arranged downward by an end stop 134 for even further reducing weather influences reaching the ventilator.

The plane IV defines a cross-section and viewing direction for figure 6.

Figure 4 schematically shows a cross-section of a third embodiment of a cabinet 100 according to the invention installed in a side-wall 3 of a structure.

Reference numbers in figure 4 which are equal to reference numbers in figures 2 or 3 refer to the same features. Also, equal effects are reached by features with equal reference numbers. Only the reference numbers and features which are different from figures 2 or 3 will be discussed.

The plane IV defines a cross-section and viewing direction for figure 6.

The cabinet comprises an inlet opening 120 arranged upstream from a passage 111 and an outlet opening 130 arranged downstream from the passage. The inlet opening is arranged higher compared to the outlet opening when installed.

A heat pump is most of the time used for heating. During heating of the inside of the structure, warmth is extracted from the outside air. Air drawn into the cabinet is thus warmer than air expelled from the cabinet. As the expelled air is colder compared to the surrounding air, this expelled air due to the higher density will tend to fall. Arranging the outlet opening below the inlet opening will have the effect that less of the expelled air is drawn into the cabinet again for optimizing the efficiency of extracting heat from the air.

The cabinet further may comprise a condensate drip tray 150 with a condensate drip tray side 151 and a condensate drip tray drain 152. The condensate drip tray drain may be coupled with a tube, such as a flexible hose, for leading the condensate from the tray to the outside of the cabinet. The tube is not shown in figure

4. In this preferred embodiment of the cabinet, the condensate drip tray is integrated in the partitioning element.

Further, as an example, the cabinet is installed in a side-wall of the structure instead of the roof. Any embodiment of the cabinet may be installed in a side-wall or a roof of a structure without limitation depending on where the fitting means are installed.

In a preferred embodiment, a cabinet is installed in a side-wall, wherein fitting means are arranged for allowing the cabinet to be installed such that more than half of the cabinet is inside the structure. In a further embodiment, the inlet and outlet opening of the cabinet are flush with the side-wall. This provides the effect of minimizing the space occupied by the cabinet on the outside of the structure, which space may be valuable or limited. Furthermore, safety for people walking on the outside of the structure is improved as the likelihood of bumping into the cabinet is minimized.

In a preferred embodiment, a cabinet is installed in a side-wall, wherein fitting means are arranged for allowing the cabinet to be installed such that more than half of the cabinet is outside the structure. In a further embodiment, the hatch 141 is flush with the side-wall. This provides the effect of minimizing the space occupied by the cabinet on the inside of the structure, which space may be valuable or limited.

Figure 5 schematically shows a cross-section defined by line II in figure 1of a roof 2 and a fourth embodiment of a cabinet 100 according to the invention.

Reference numbers in figure 5 which are equal to reference numbers in figures 2, 3 or 4 refer to the same features. Also, equal effects are reached by features with equal reference numbers. Only the reference numbers and features which are different from figures 2, 3 or 4 will be discussed.

In figure 5 the cabinet comprises an outlet opening 130 for allowing air from inside the second chamber to flow to the outside of the structure. The cabinet further comprises outlet lamellae 131 arranged in the outlet opening to advantageously reduce weather influences reaching the ventilator.

The installed cabinet further defines a first direct perpendicular p1 for the inlet opening and a second direct perpendicular p2 for the outlet opening. Although the perpendiculars only extend from the respective opening downwards, for clarity reasons only the perpendiculars are extended upwards as well. The installed cabinet further defines a passage entrance plane s1 and a passage exit plane s2, which are vertical in this embodiment. And although both planes extend only across the passage entrance or exit, for clarity reasons the planes are extended upwards.

Further, a third distance d3 is defined as the shortest horizontal distance between the passage and the first direct perpendicular p1. As the passage entrance is closer compared to the passage exit, the passage entrance is selected for determining the third distance. This third distance reduces the possibility of weather influences, such as rain, snow, ice or hail, reaching the ventilator of the outdoor unit of the heat pump and thereby has the effect of enhancing the lifetime of the outdoor unit and thus of the heat pump. This effect is further improved in this embodiment by the inlet lamellae.

Further, a fourth distance d4 is defined as the shortest horizontal distance between the passage and the second direct perpendicular p2. As the passage exit is closer compared to the passage entrance, the passage exit is selected for determining the fourth distance. This fourth distance reduces the possibility of weather influences, such as rain, snow, ice or hail, reaching the ventilator of the outdoor unit of the heat pump and thereby has the effect of enhancing the lifetime of the ventilator of the outdoor unit and thus of the heat pump. This effect is further improved in this embodiment by the outlet lamellae.

The plane IV defines a cross-section and viewing direction for the figure 6.

Figure 6A schematically shows a cross-section defined by line IV in figure 2, 3, 4 or 5 of a first embodiment of a partitioning element 110. The partitioning element comprises a flexible skirt 160. The ventilator may comprise a cylindrical housing 53 arranged concentric to the axis of rotation of the ventilator to shield the tips of the ventilator. When the ventilator is arranged in the passage the flexible skirt is elastic and may be stretched to fit to the size of the housing of the ventilator. The partitioning element is thus adaptable to different sized housings.

In a preferred embodiment, the flexible skirt is made of a flexible polyester sheet, such as a Bisonyl sheet.

In a preferred embodiment, the flexible skirt is attached to the partitioning element and/or housing of the ventilator with hook-and-loop fasteners or Velcro.

Figure 6B schematically shows a cross-section defined by line IV in figure 2, 3, 4 or 5 of a second embodiment of a partitioning element 110. The partitioning element comprises at least one, preferably multiple, inserts 170, 171, 172, 173. The ventilator may comprise a cylindrical housing 53 arranged concentric to the axis of rotation of the ventilator to shield the tips of the ventilator. When arranging the ventilator in the passage depending on the size of the ventilator one or more inserts may be removed for fitting the ventilator in the passage. A part of the insert may

comprise a flexible skirt as described under figure 6A for improving the fitting of the ventilator in the insert. The partitioning element is thus adaptable to different sized ventilators.

Figure 6C schematically shows a cross-section defined by line IV in figure 2, 3, 4 or 5 of a third embodiment of a partitioning element 110. The partitioning element comprises at least one, preferably multiple, cutlines 180, 181, 182, 183. The ventilator may comprise a cylindrical housing 53 arranged concentric to the axis of rotation of the ventilator to shield the tips of the ventilator. When arranging the ventilator in the passage depending on the size of the ventilator one or more parts of the partitioning element may be cut away for fitting the ventilator in the passage. A part of the partitioning element may comprise a flexible skirt as described under figure 6A for improving the fitting of the ventilator in the partitioning element. Furthermore, the cutline may be placed on an insert as described under figure 6B. The partitioning element is thus adaptable to different sized ventilators.

The cabinet may alternatively be labelled as box. The partitioning element may alternatively be labelled as baffle plate or secretion. The partitioning element advantageously directs the air such that the air surrounding the heat exchanger is refreshed with outside air that predominantly didn't go through the cabinet as yet. The outside air may absorb or emit only a limited amount of energy for optimizing the coefficient of performance (COP) of the heat pump.

In the foregoing specification, the invention has been described with reference to specific examples of embodiments of the invention. It will, however, be evident that various modifications and changes may be made therein without departing from the scope of the invention as set forth in the appended claims. For example, the shapes may be any type of shape suitable to achieve the desired effect. Devices functionally forming separate devices may be integrated in a single physical device.

However, other modifications, variations and alternatives are also possible. The specifications and drawings are, accordingly, to be regarded in an illustrative rather than in a restrictive sense.

In the claims, any reference signs placed between parentheses shall not be construed as limiting the claim. The word 'comprising' or 'including' does not exclude the presence of other elements or steps than those listed in a claim. Furthermore, the terms "a" or "an," as used herein, are defined as one or as more than one. Also, the use of introductory phrases such as "at least one" and "one or more" in the claims should not be construed to imply that the introduction of another claim element by the

indefinite articles "a" or "an" limits any particular claim containing such introduced claim element to inventions containing only one such element, even when the same claim includes the introductory phrases "one or more" or "at least one" and indefinite articles such as "a" or "an." The same holds true for the use of definite articles. Unless stated otherwise, terms such as “first” and “second” are used to arbitrarily distinguish between the elements such terms describe. Thus, these terms are not necessarily intended to indicate temporal or other prioritization of such elements. The mere fact that certain measures are recited in mutually different claims does not indicate that a combination of these measures cannot be used to advantage.

Embodiments:

1. Cabinet (100) for housing a heat exchanger (51) and a ventilator (52) of a heat pump influencing a temperature inside a structure (1), comprising:

- a partitioning element (110) arranged for partitioning the cabinet in a first chamber (118) and a second chamber (119);

- an inlet opening (120) for allowing air from outside the structure to flow into the first chamber;

- an outlet opening (130) for allowing air from inside the second chamber to flow to the outside of the structure; and

- a passage (111) in the partitioning element for arranging the ventilator in the passage for generating an airflow from the first chamber to the second chamber and along the heat exchanger,

wherein, when the cabinet is installed, the passage is positioned outside the direct perpendicular (p1, p2, p3, p4) of the inlet opening and/or the outlet opening.

2. Cabinet according to claim 1, wherein the partitioning element comprises adapting means for adapting the passage to the size of the ventilator.

3. Cabinet according to claim 2, wherein the adapting means comprise a flexible skirt (160).

4. Cabinet according to any of the claims 2-3, wherein the adapting means comprise an insert (170, 171, 172, 173).

5. Cabinet according to any of the claims 2-4, wherein the adapting means comprise a cutline (180, 181, 182) for cutting away a part of partitioning element.

6. Cabinet according to any of the preceding claims, wherein the cabinet comprises fitting means for fitting the cabinet in a side of the structure.

7. Cabinet according to claim 6, wherein the cabinet comprises walls, which are at least partly isolated to prevent direct heat exchange between air in the interior of the cabinet and the inside of the structure.

8. Cabinet according to any of the claims 6-7, wherein the fitting means are for arranging the cabinet to an angled roof.

9. Cabinet according to any of the claims 6-8, wherein the cabinet comprises a service hatch (141, 142) arranged for allowing access to the interior of the cabinet from within the structure.

10. Cabinet according to any of the preceding claims, wherein the cabinet comprises a condensate drip tray (150) for collecting condensate from the heat exchanger and air in the first and/or second chamber.

11. Cabinet according to any of the preceding claims, wherein the inlet opening and the outlet opening are spaced at a distance for prohibiting air expelled from the outlet opening to enter the cabinet again via the inlet opening.

12. Cabinet according to any of the preceding claims, wherein the outlet opening is spaced at a distance from the side of the structure.

13. Heat pump system for heating or cooling a structure comprising:

- a first heat exchanger for heating or cooling a space;
- a second heat exchanger;
- a ventilator arranged to the second heat exchanger for generating an air flow over the second heat exchanger; and
- a cabinet according to any of the preceding claims housing the second heat exchanger and the ventilator.

14. Heat pump system according to claim 13, wherein the ventilator is an axial ventilator.

15. Heat pump system according to any of the claims 13-14, wherein the space is an internal space of the structure for changing the air temperature of the internal space or an interior space of a water container, such as a boiler, for changing the water temperature in the water container.

CONCLUSIES

1. Kast (100) voor het behuizen van een warmtewisselaar (51) en een ventilator (52) van een warmte pomp, die een temperatuur binnen in een gebouw beïnvloed (1), omvattende:

- een scheidingselement (110) gerangschikt voor het scheiden van de kast in een eerste kamer (118) en een tweede kamer (119);
- een inlaatopening (120) voor het laten stromen van lucht van buiten het gebouw in de eerste kamer;
- een uitlaatopening (130) voor het laten stromen van lucht in de tweede kamer naar buiten het gebouw; en
- een doorgang (111) in het scheidingselement voor het rangschikken van de ventilator in de doorgang voor het genereren van een luchtstroom van de eerste kamer naar de tweede kamer en langs de warmtewisselaar,

waarbij, wanneer de kast is geïnstalleerd, de doorgang is gepositioneerd buiten de direct loodrechte lijn (p1, p2, p3, p4) van de inlaatopening en/of de uitlaatopening.

2. Kast volgens conclusie 1, waarbij het scheidingselement aanpasmiddelen omvat voor het aanpassen van de grootte van de doorgang aan de grootte van de ventilator.

3. Kast volgens conclusie 2, waarbij de aanpasmiddelen een flexibel schort (160) omvatten.

4. Kast volgens conclusie 2-3, waarbij de aanpasmiddelen inzetstukken (170, 171, 172, 173) omvat.

5. Kast volgens conclusie 2-4, waarbij de aanpasmiddelen een snijlijn (180, 181, 182) voor het wegsnijden van een deel van het scheidingselement omvat.

6. Kast volgens één van de voorgaande conclusies, waarbij de kast pasmiddelen voor het inpassen van de kast in een zijde van het gebouw omvat.

7. Kast volgens conclusie 6, waarbij de kast zijden omvat, welke ten minste gedeeltelijk zijn geïsoleerd voor het voorkomen van directe warmte uitwisseling tussen lucht aan de binnenzijde van de kast en lucht binnenin het gebouw.

8. Kast volgens conclusie 6-7, waarbij de aanpasmiddelen zijn voor het rangschikken van de kast in een schuin dak.

9. Kast volgens conclusie 6-8, waarbij de kast een diensttoegangsluik (141, 142) gerangschikt voor het geven van toegang tot de binnenzijde van de kast vanuit de binnenzijde van het gebouw omvat.

10. Kast volgens één van de voorgaande conclusies, waarbij de kast een condensbak (150) voor het verzamelen van condensaat van de warmtewisselaar en lucht in de eerste en/of tweede kamer omvat.

11. Kast volgens één van de voorgaande conclusies, waarbij de inlaatopening en de uitlaatopening op afstand van elkaar zijn geplaatst voor het voorkomen dat uitgedreven lucht uit de uitlaatopening de kast weer binnengaat door de inlaatopening.

12. Kast volgens één van de voorgaande conclusies, waarbij de uitlaatopening op afstand is geplaatst van het gebouw.

13. Warmtepompsysteem voor het verwarmen of koelen van een gebouw, omvattende:

- een eerste warmtewisselaar voor het verwarmen of koelen van een ruimte;
- een tweede warmtewisselaar;
- een ventilator gerangschikt aan de tweede warmtewisselaar voor het opwekken van een luchtstroom over de tweede warmtewisselaar; en
- een kast volgens één van de voorgaande conclusies voor het behuizen van de tweede warmtewisselaar en de ventilator.

14. Warmtepompsysteem volgens conclusie 13, waarbij de ventilator een axiale ventilator is.

15. Warmtepompsysteem volgens één van de conclusies 13-14, waarbij de ruimte een interne ruimte van het gebouw voor het veranderen van de luchttemperatuur van de interne ruimte of een interne ruimte van een waterhouder, zoals een boiler, voor het veranderen van de watertemperatuur in de waterhouder is.

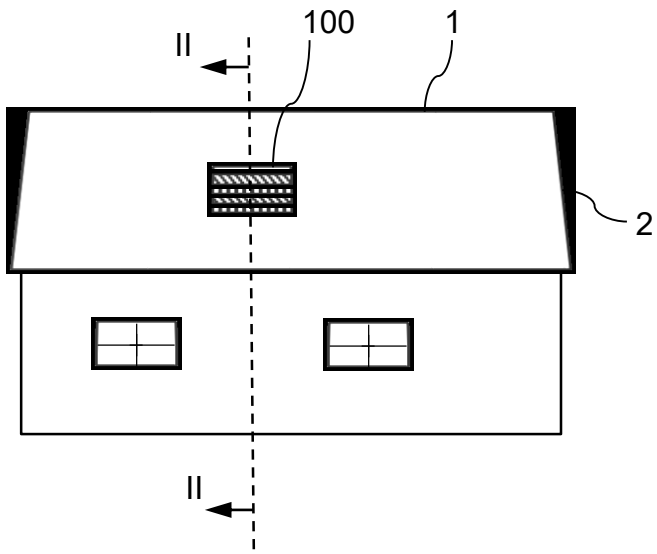

Fig. 1

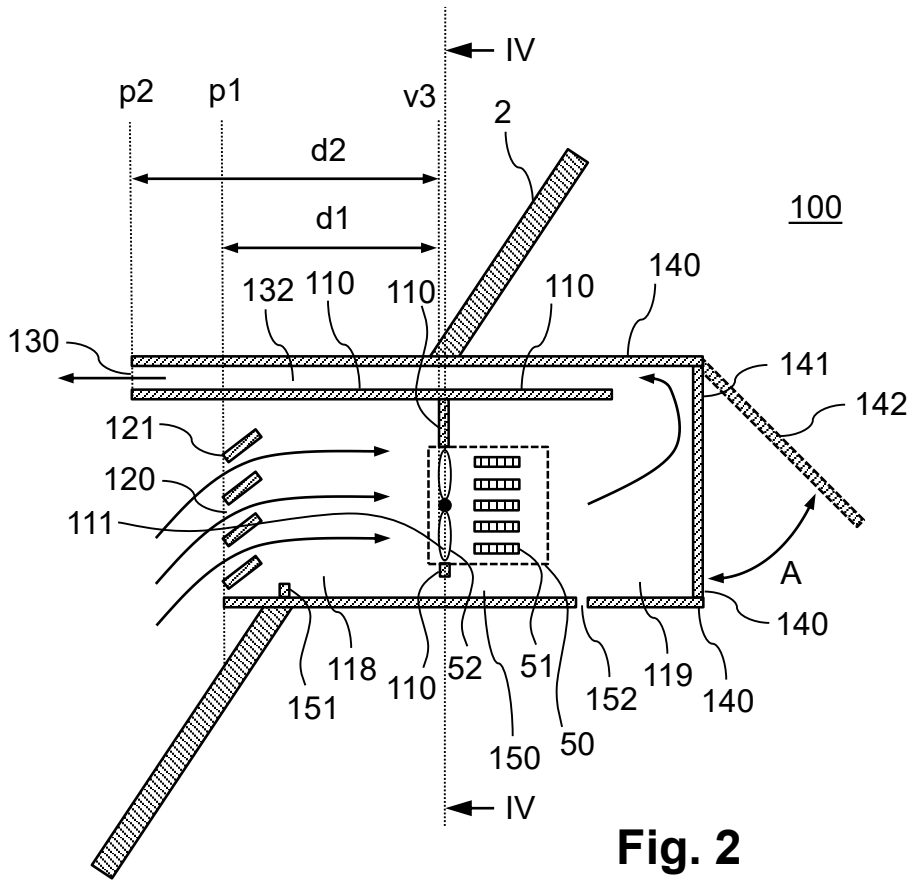
IV
p2
p1
v3
2
d2
d1
100
132
110
110
110
140
130
141
142
121
120
111
A
140
118
110
52
51
152
119
140
151
150
50
IV

Fig. 2

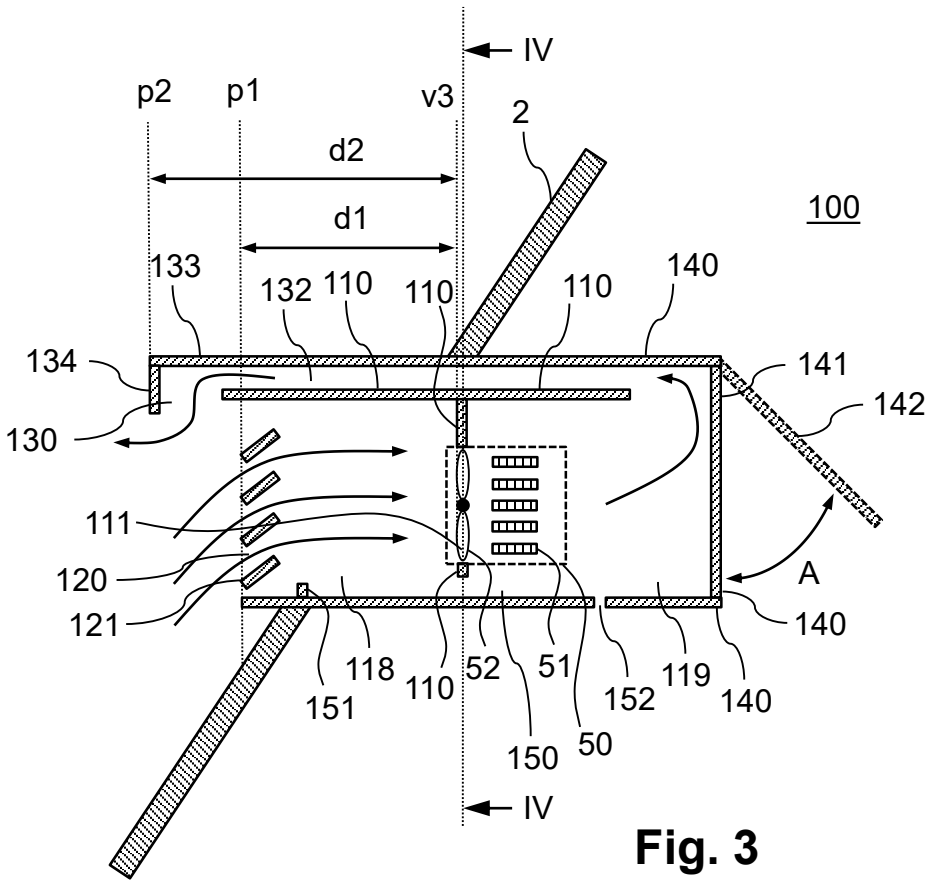
IV
p2
p1
v3
2
d2
d1
100
133
132
110
110
110
140
134
141
142
130
111
120
121
A
140
118
110
52
51
152
119
140
151
150
50
IV

Fig. 3

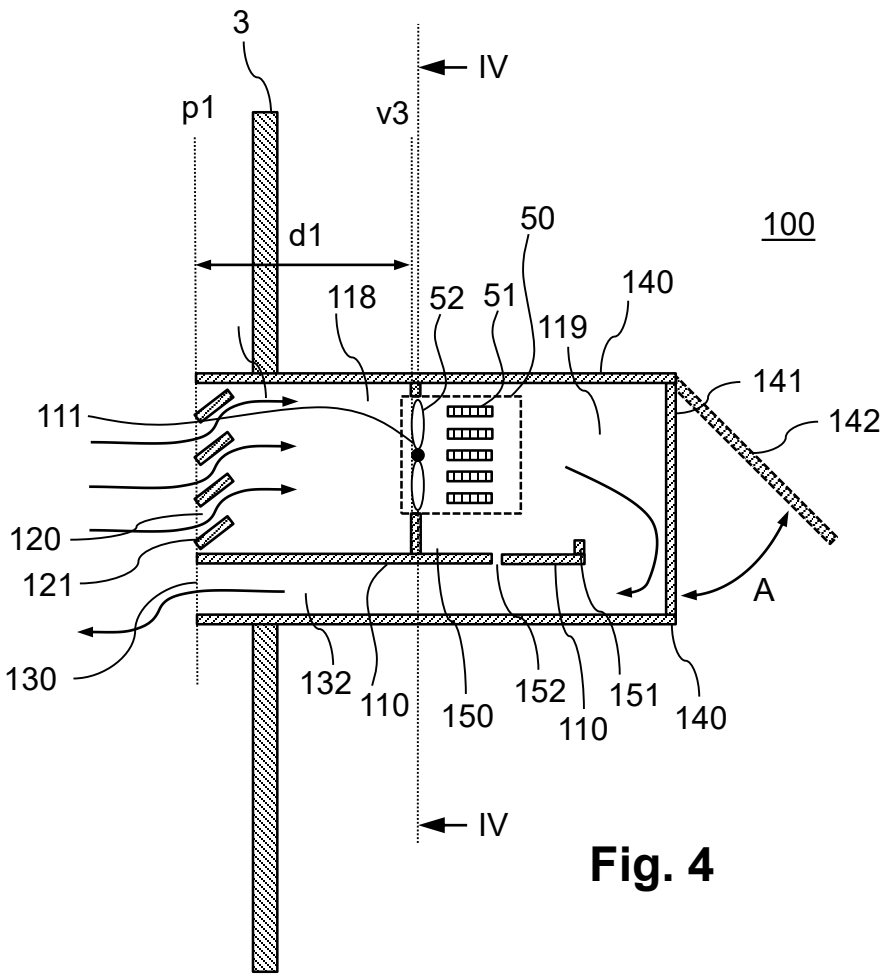
3
IV
p1
v3
d1
50
100
118
52
51
140
119
141
142
111
120
121
130
A
132
110
150
152
110
151
140
IV

Fig. 4

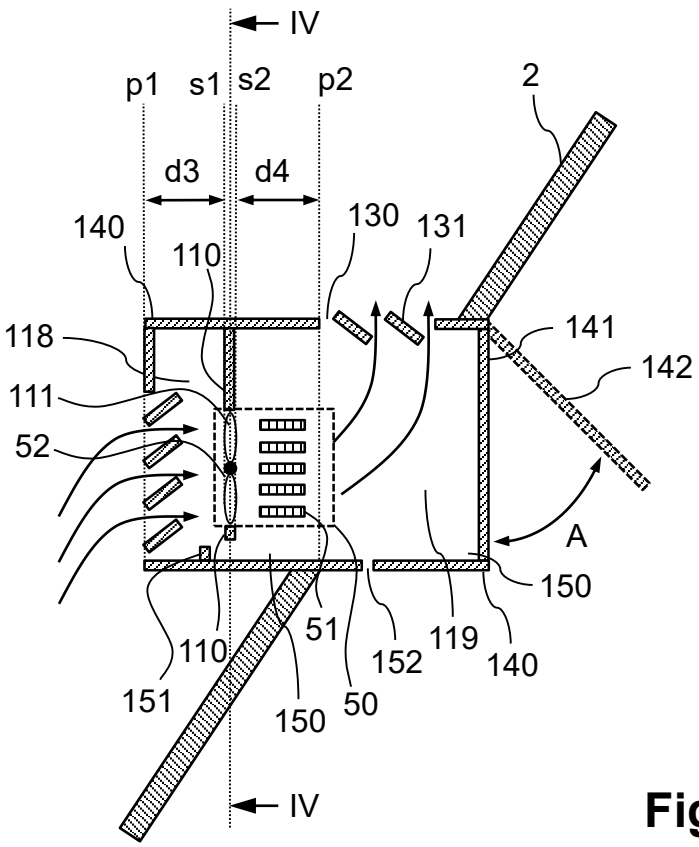
IV
p1
s1
s2
p2
2
d3
d4
100
140
110
130
131
118
141
142
111
52
A
150
110
51
119
140
151
152
150
50
IV

Fig. 5

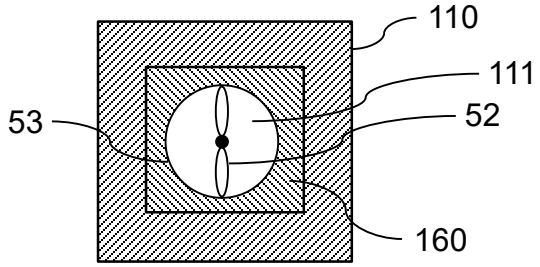

Fig. 6A

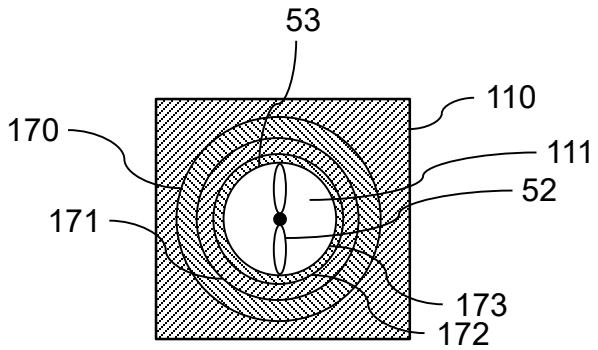

Fig. 6B

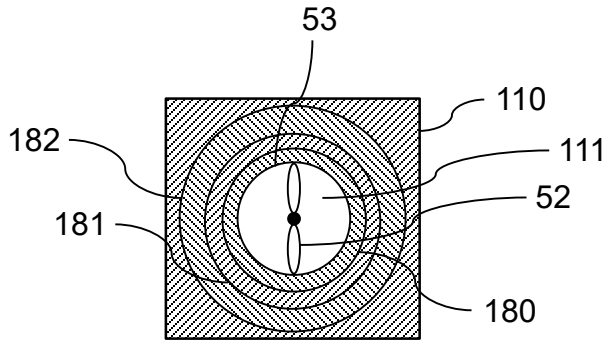

Fig. 6C

SAMENWERKINGSVERDRAG (PCT)

RAPPORT BETREFFENDE NIEUWHEIDSONDERZOEK VAN INTERNATIONAAL TYPE

IDENTIFICATIE VAN DE NATIONALE AANVRAGE	KENMERK VAN DE AANVRAGER OF VAN DE GEMACHTIGDE
	GP16015NL-2
Nederlands aanvraag nr. **2018716**	Indieningsdatum **13-04-2017**
	Ingeroepen voorrangsdatum **31-01-2017**
Aanvrager (Naam) **ADG Dynamics B.V.**	
Datum van het verzoek voor een onderzoek van internationaal type **27-05-2017**	Door de Instantie voor Internationaal Onderzoek aan het verzoek voor een onderzoek van internationaal type toegekend nr. **SN69020**

I. CLASSIFICATIE VAN HET ONDERWERP (bij toepassing van verschillende classificaties, alle classificatiesymbolen opgeven)

Volgens de internationale classificatie (IPC)

F24F1/02;F24F1/38;F24F1/56;F24F13/20;F04D25/12;F24F13/24

II. ONDERZOCHTE GEBIEDEN VAN DE TECHNIEK

Onderzochte minimumdocumentatie

Classificatiesysteem	Classificatiesymbolen
IPC	**F24F;F04D**

Onderzochte andere documentatie dan de minimum documentatie, voor zover dergelijke documenten in de onderzochte gebieden zijn opgenomen

III. ☐	**GEEN ONDERZOEK MOGELIJK VOOR BEPAALDE CONCLUSIES**	(opmerkingen op aanvullingsblad)
IV. ☐	**GEBREK AAN EENHEID VAN UITVINDING**	(opmerkingen op aanvullingsblad)

ONDERZOEKSRAPPORT BETREFFENDE HET RESULTAAT VAN HET ONDERZOEK NAAR DE STAND VAN DE TECHNIEK VAN HET INTERNATIONALE TYPE

Nummer van het verzoek om een onderzoek naar de stand van de techniek
NL 2018716

A. CLASSIFICATIE VAN HET ONDERWERP
INV. F24F1/02 F24F1/38 F24F1/56 F24F13/20 F04D25/12
F24F13/24
ADD.
Volgens de Internationale Classificatie van octrooien (IPC) of zowel volgens de nationale classificatie als volgens de IPC.

B. ONDERZOCHTE GEBIEDEN VAN DE TECHNIEK

Onderzochte miminum documentatie (classificatie gevolgd door classificatiesymbolen)
F24F F04D

Onderzochte andere documentatie dan de mimimum documentatie, voor dergelijke documenten, voor zover dergelijke documenten in de onderzochte gebieden zijn opgenomen

Tijdens het onderzoek geraadpleegde elektronische gegevensbestanden (naam van de gegevensbestanden en, waar uitvoerbaar, gebruikte trefwoorden)
EPO-Internal, WPI Data

C. VAN BELANG GEACHTE DOCUMENTEN

Categorie °	Geciteerde documenten, eventueel met aanduiding van speciaal van belang zijnde passages	Van belang voor conclusie nr.
X Y	EP 1 391 661 A1 (DAIKIN IND LTD [JP]) 25 februari 2004 (2004-02-25) * het gehele document * -----	1,2,4-15 3
X	US 2 920 464 A (ALLEN TRASK) 12 januari 1960 (1960-01-12) * kolom 2, regel 8 - kolom 2, regel 64 * * figuren * -----	1,13
X	EP 3 070 410 A1 (LG ELECTRONICS INC [KR]) 21 september 2016 (2016-09-21) * alinea [0033] - alinea [0073] * * figuren * -----	1
Y	WO 98/54518 A1 (DAEWOO ELECTRONICS CO LTD [KR]) 3 december 1998 (1998-12-03) * bladzijde 8, regel 11 - bladzijde 9, regel 8 * * figuren 4-6 * -----	3

☐ Verdere documenten worden vermeld in het vervolg van vak C.

☒ Leden van dezelfde octrooifamilie zijn vermeld in een bijlage

° Speciale categorieën van aangehaalde documenten

"A" niet tot de categorie X of Y behorende literatuur die de stand van de techniek beschrijft

"D" in de octrooiaanvrage vermeld

"E" eerdere octrooi(aanvrage), gepubliceerd op of na de indieningsdatum, waarin dezelfde uitvinding wordt beschreven

"L" om andere redenen vermelde literatuur

"O" niet-schriftelijke stand van de techniek

"P" tussen de voorrangsdatum en de indieningsdatum gepubliceerde literatuur

"T" na de indieningsdatum of de voorrangsdatum gepubliceerde literatuur die niet bezwarend is voor de octrooiaanvrage, maar wordt vermeld ter verheldering van de theorie of het principe dat ten grondslag ligt aan de uitvinding

"X" de conclusie wordt als niet nieuw of niet inventief beschouwd ten opzichte van deze literatuur

"Y" de conclusie wordt als niet inventief beschouwd ten opzichte van de combinatie van deze literatuur met andere geciteerde literatuur van dezelfde categorie, waarbij de combinatie voor de vakman voor de hand liggend wordt geacht

"&" lid van dezelfde octrooifamilie of overeenkomstige octrooipublicatie

Datum waarop het onderzoek naar de stand van de techniek van internationaal type werd voltooid	Verzenddatum van het rapport van het onderzoek naar de stand van de techniek van internationaal type
31 oktober 2017	

Naam en adres van de instantie	De bevoegde ambtenaar
European Patent Office, P.B. 5818 Patentlaan 2 NL - 2280 HV Rijswijk Tel. (+31-70) 340-2040, Fax: (+31-70) 340-3016	Mattias Grenbäck

Formulier PCT/ISA/201 (tweede blad) (Januari 2004)

ONDERZOEKSRAPPORT BETREFFENDE HET RESULTAAT VAN HET ONDERZOEK NAAR DE STAND VAN DE TECHNIEK VAN HET INTERNATIONALE TYPE

Informatie over leden van dezelfde octrooifamilie

Nummer van het verzoek om een onderzoek naar de stand van de techniek
NL 2018716

In het rapport genoemd octrooigeschrift	Datum van publicatie	Overeenkomend(e) geschrift(en)	Datum van publicatie
EP 1391661 A1	25-02-2004	CN 1389672 A	08-01-2003
		CN 2577163 Y	01-10-2003
		EP 1391661 A1	25-02-2004
		JP 2002357335 A	13-12-2002
		WO 02097337 A1	05-12-2002
US 2920464 A	12-01-1960	GEEN	
EP 3070410 A1	21-09-2016	CN 105987457 A	05-10-2016
		EP 3070410 A1	21-09-2016
		KR 20160111209 A	26-09-2016
		US 2016273788 A1	22-09-2016
WO 9854518 A1	03-12-1998	CN 1201127 A	09-12-1998
		US 5927391 A	27-07-1999
		WO 9854518 A1	03-12-1998

WRITTEN OPINION

File No.	Filing date *(day/month/year)*	Priority date *(day/month/year)*	Application No.
SN69020	13.04.2017	31.01.2017	NL2018716

International Patent Classification (IPC)
INV. F24F1/02 F24F1/38 F24F1/56 F24F13/20 F04D25/12 F24F13/24

Applicant
ADG Dynamics B.V.

This opinion contains indications relating to the following items:

- ☒ Box No. I Basis of the opinion
- ☐ Box No. II Priority
- ☐ Box No. III Non-establishment of opinion with regard to novelty, inventive step and industrial applicability
- ☐ Box No. IV Lack of unity of invention
- ☒ Box No. V Reasoned statement with regard to novelty, inventive step or industrial applicability; citations and explanations supporting such statement
- ☐ Box No. VI Certain documents cited
- ☐ Box No. VII Certain defects in the application
- ☐ Box No. VIII Certain observations on the application

	Examiner
	Mattias Grenbäck

Application number

WRITTEN OPINION

NL2018716

Box No. I Basis of this opinion

1. This opinion has been established on the basis of the latest set of claims filed before the start of the search.

2. With regard to any **nucleotide and/or amino acid sequence** disclosed in the application and necessary to the claimed invention, this opinion has been established on the basis of:

   a. type of material:

   ☐ a sequence listing

   ☐ table(s) related to the sequence listing

   b. format of material:

   ☐ on paper

   ☐ in electronic form

   c. time of filing/furnishing:

   ☐ contained in the application as filed.

   ☐ filed together with the application in electronic form.

   ☐ furnished subsequently for the purposes of search.

3. ☐ In addition, in the case that more than one version or copy of a sequence listing and/or table relating thereto has been filed or furnished, the required statements that the information in the subsequent or additional copies is identical to that in the application as filed or does not go beyond the application as filed, as appropriate, were furnished.

4. Additional comments:

Box No. V Reasoned statement with regard to novelty, inventive step or industrial applicability; citations and explanations supporting such statement

1. Statement

Novelty	Yes:	Claims	3, 5-8
	No:	Claims	1, 2, 4, 9-15
Inventive step	Yes:	Claims	
	No:	Claims	1-15
Industrial applicability	Yes:	Claims	1-15
	No:	Claims	

2. Citations and explanations

see separate sheet

Item V

Reasoned statement with regard to novelty, inventive step or industrial applicability; citations and explanations supporting such statement

Reference is made to the following documents:

D1 EP 1 391 661 A1 (DAIKIN IND LTD [JP]) 25 februari 2004 (2004-02-25)

D2 US 2 920 464 A (ALLEN TRASK) 12 januari 1960 (1960-01-12)

D3 EP 3 070 410 A1 (LG ELECTRONICS INC [KR]) 21 september 2016 (2016-09-21)

D4 WO 98/54518 A1 (DAEWOO ELECTRONICS CO LTD [KR]) 3 december 1998 (1998-12-03)

1 The present application does not meet the criteria of patentability, because the subject-matter of claim 1 is not new.

1.1 D1 discloses (the references in parentheses applying to this document): A cabinet (10) for housing a heat exchanger (30) and a ventilator (51) of a heat pump influencing a temperature inside a structure, comprising:
- a partitioning element (41) arranged for partitioning the cabinet in a first chamber (42) and a second chamber (43);
- an inlet opening (26) for allowing air from outside the structure to flow into the first chamber (paragraph 30; figure 2);
- an outlet opening (21) for allowing air from inside the second chamber to flow to the outside of the structure (figure 2); and
- a passage (45) in the partitioning element for arranging the ventilator in the passage for generating an airflow from the first chamber to the second chamber (paragraph 32) and along the heat exchanger,
wherein, when the cabinet is installed, the passage is positioned outside the direct perpendicular of the inlet opening and/or the outlet opening (figure 2).

1.2 Furthermore documents D2 and D3 discloses all the features of claim 1 rendering it not new.

2 Dependent claims 2-15 do not contain any features which, in combination with the features of any claim to which they refer, meet the requirements of novelty and/or inventive step, see documents D1 to D4 and references applying to this documents cited in the search report.