Oct. 27, 1925. 1,559,070

M. J. CALLAHAN

FLUID CONTROL FOR DAMPERS FOR UNIT VENTILATORS

Filed May 13, 1920 2 Sheets-Sheet 1

Fig 2.

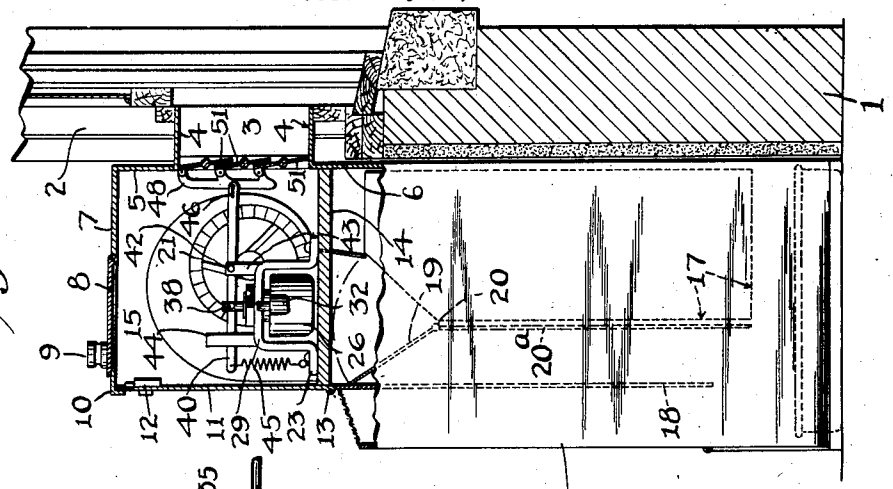

Fig 1.

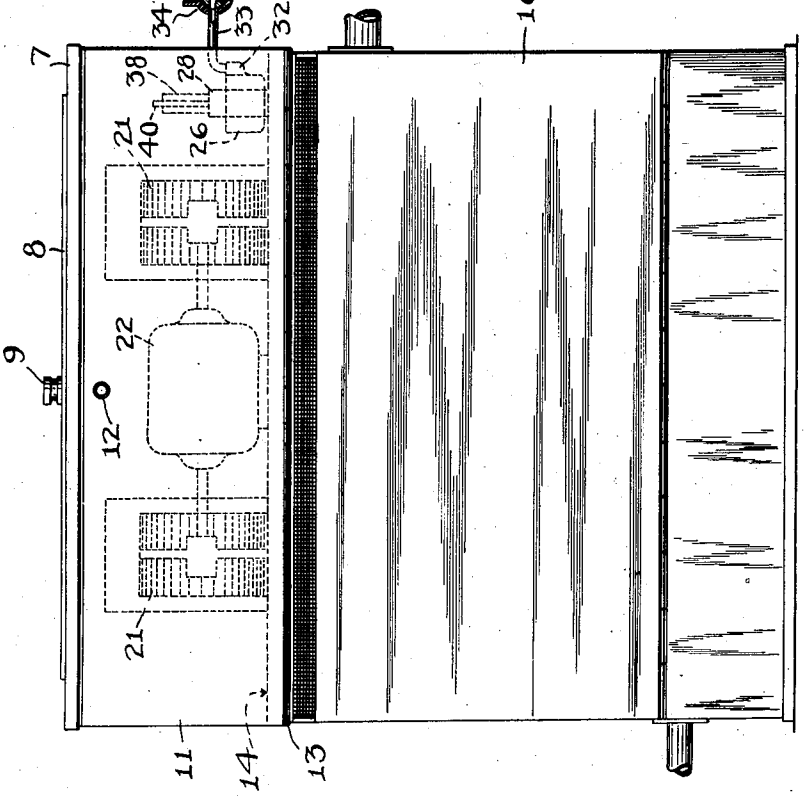

INVENTOR:
Michael J. Callahan.
BY
Chas. M. Chapman,
ATTORNEY.

Oct. 27, 1925. 1,559,070

M. J. CALLAHAN

FLUID CONTROL FOR DAMPERS FOR UNIT VENTILATORS

Filed May 13, 1920 2 Sheets-Sheet 2

Fig.3.

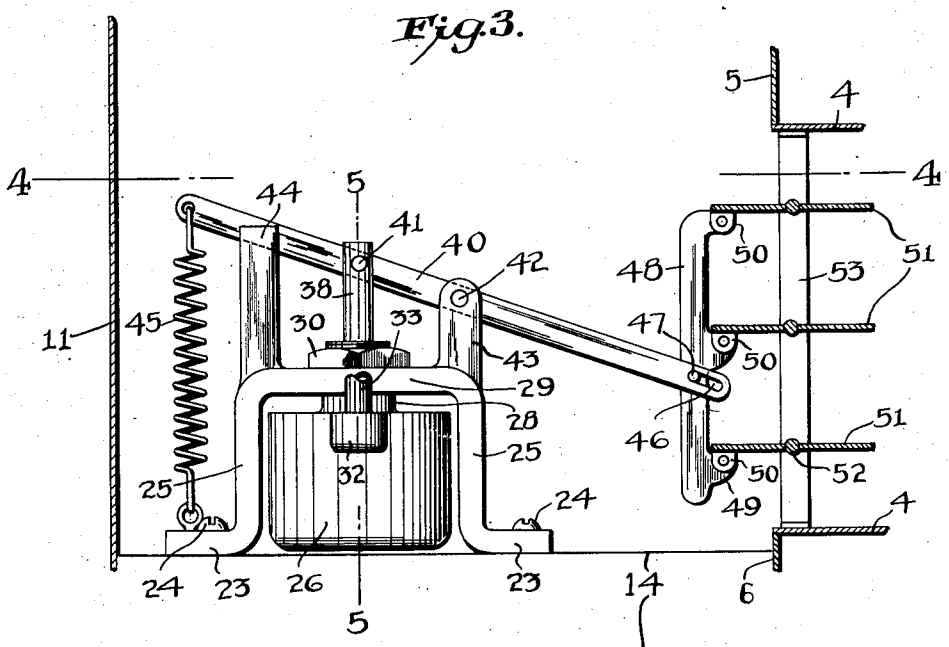

Fig.4.

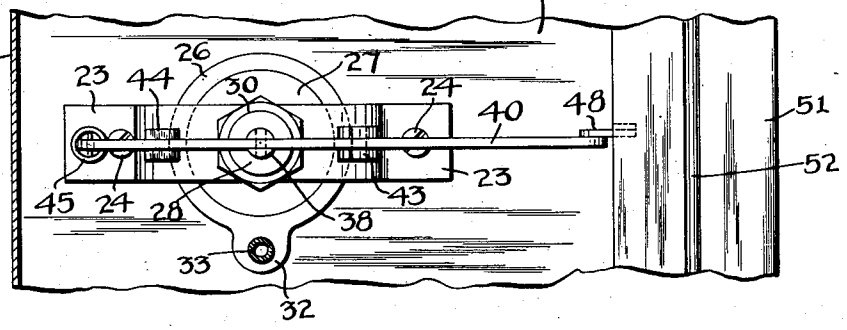

Fig.5.

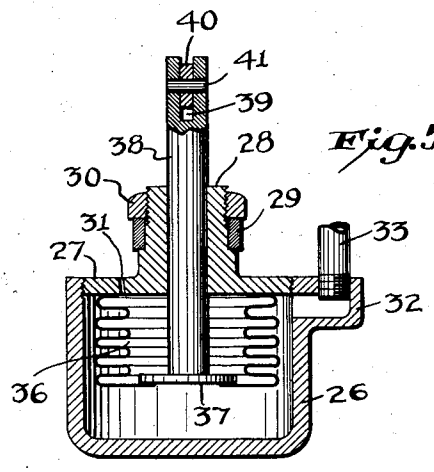

INVENTOR:
Michael J. Callahan,
BY
Chas. M. Chapman,
ATTORNEY.

Patented Oct. 27, 1925. 1,559,070

UNITED STATES PATENT OFFICE.

MICHAEL J. CALLAHAN, OF NEW YORK, N. Y.

FLUID CONTROL FOR DAMPERS FOR UNIT VENTILATORS.

Application filed May 13, 1920. Serial No. 381,108.

To all whom it may concern:

Be it known that I, MICHAEL J. CALLAHAN, a citizen of the United States, residing in the borough of Manhattan, city, county, and State of New York, have invented a new and useful Improvement in Fluid Controls for Dampers for Unit Ventilators, of which the following is a description.

This invention has reference to ventilating apparatus of the unit type adapted for individual installation in schools, houses, lofts, basements and buildings generally, as well as where the installation of the usual type of ventilating systems would be impracticable or too expensive, and, particularly, has reference to fluid control of the dampers for such unit ventilators.

Among the objects of my invention may be noted the following: to provide a controlling means for unit ventilators by which the ingress of fresh air to the unit, or through the unit to the room, may be controlled by a fluid, according to predetermination; to provide a fluid controlling means for the fresh air damper of unit ventilators which enables the damper to be instantly opened when desired and held closed, as may be required or desired, during any of the various operations of which the ventilator is susceptible; to provide a fluid control by which the damper of a ventilator may be operated independently of the means for operating the motor for the fans; to provide fluid operated means by which the damper for the ingress of fresh air to ventilators may be opened or closed at will simultaneously with, or independently of, the operation of the fans or blowers; to provide a unit ventilating apparatus with a multiple damper capable of being operated to permit the ingress of air to the apparatus and controlled by fluid means so as to enable fresh air to be supplied to the unit ventilator when the same may be required, either during the operation of the blowers or otherwise.

With the foregoing objects in view, and others which will be detailed during the course of this description, my invention consists in the parts, features, elements and combinations thereof hereinafter described and claimed.

In order that my invention may be clearly understood, I have provided drawings wherein:

Figure 1 is a front elevation of a unit ventilator having a radiator therein, and showing the position of my controlling means in dotted lines;

Figure 2 is a sectional elevation, parts being broken away, looking at the apparatus of Figure 1 from one end, and embodying my invention;

Figure 3 is a sectional elevation, on an enlarged scale, showing the multiple damper and fluid controlled means for actuating the same;

Figure 4 is a top plan view of Figure 3; and

Figure 5 is a sectional detail of the fluid controlled device for operating the multiple damper shown in Figure 3.

Referring to the drawings, the numeral 1, Figure 2, indicates the wall of a building having an opening and surrounding framing for the opening, as usual, and generally indicated by 2. I desire it understood, however, that the opening or passage 3 for the inlet of air to my ventilating unit may be through a window, the wall of a building, or through flues from any point or place where said air can be obtained and which may be found most convenient or suitable for the installation. Inserted in the opening 3 is the outwardly extended casing member 4 of the ventilating unit, the same being extended upwardly at 5, and downwardly, as at 6, within the wall of the room or other space in which the installation is made. The casing member 5 is extended horizontally into the room, as at 7, and is provided with a hinged cover 8 adapted to be operated by the handle or knob 9 and to rest, at its front edge, upon the ledge 10 of the frame. The front of the frame or casing, at its top, is also provided with a closure 11 having a spring lock 12 or other locking medium. The closure is hinged at its bottom edge at 13 adjacent the shelf or support 14, which divides the blower and motor space 15 in the upper part of the casing from the lower part of the casing 16, wherein a radiator 17, baffle 18, and damper 19 are arranged, the damper 19 being pivotally mounted at 20 upon the partition 20ª. These parts are all the same as in my application Serial Number 301,190, filed June 2, 1919, and need not be described in further detail, since they form no part of my invention. The blowers or fans are indicated at 21, and are driven by

the motor 22, all shown in dotted lines in Figure 2, and they are supported upon the shelf or support 14.

Adjacent the right end of the ventilating unit, viewing Figure 1, and see particularly Figure 2, the support for a fluid controlled apparatus (air under pressure) is mounted upon the shelf 14, the base members 23 of the support being extended outwardly and secured by a plurality of screws 24 to said shelf 14. The support is in the form of a U-shaped bracket arranged in inverted position on the shelf 14, and, between the vertical arms 25 of said bracket, a cup-shaped air chamber 26 is mounted and supported by the screw-threaded cap 27 screwed into the top of the cup 26 and having a screw-threaded neck extension 28, the shouldered middle portion of which passes through and engages the horizontal member 29 of the bracket. A nut 30 clamps the shouldered screw-threaded extension 28 to the horizontal member 29 of the bracket, and, when the cup 26 is screwed upon the cap 27, said cup will be properly held in position for operation. The cap 27 is provided with an air vent 31 for the purpose presently described. The cup or chamber 26 is provided with a lateral, hollow extension 32 which communicates with the chamber of cup 26, and said extension is tapped for the admission of a pipe or tube 33 for supplying air thereto from a controlling member 34, Figure 1, which is coupled with any source of air supply which, preferably, is under pressure. The controlling member 34, which I prefer to employ, is a three-way valve coupling which, when turned as shown in Figure 1, provides for the free admission of air to the cup or chamber 26, but which, when turned 90° clockwise, will shut off the supply of air and have its ports set so as to exhaust the air from the cup 26. The valve, however, may be set by turning the same clockwise 90° more, so that the air supply may exhaust through the vent 35 from the source of supply. Within the chamber of the cup 26, a resilient, corrugated cushion or bellows 36 is secured with its upper open end hermetically sealed to the cap 27, and with the vent 31 entering into the chamber of the cushion. The lower end of the cushion is hermetically sealed to the head 37 of the plunger 38, which extends centrally through the cap 27 and its extension 28, and, at its upper end, is bifurcated at 39, in which bifurcation is set a lever 40 upon the pivotal pin 41, this making a free pivotal connection between the plunger 38 and the lever 40, which avoids binding and gives ample room for operation of both the plunger and the lever, as presently described. The lever, substantially midway its length, is fulcrumed at 42 to an upright 43 secured to the bracket member 29, and the rear end of the lever is guided in the split post 44 extending vertically from the bracket member 29. Thus strain upon the lever 40 will not be transmitted to its fulcrum 42 nor to the plunger 38. The post 44 is a guiding, steadying and strengthening member for the lever. The rear end of the lever has hooked to it a spring 45, the lower end of which is hooked to one of the bracket members 23. When the plunger 38 is under pressure from within the chamber 26 through the medium of the resilient sealing member 36, the spring 45 is under tension and ready to perform its function when the plunger 38 is released. The forward end of the lever 40 is provided with an elongated slot 46, in which operates a pin 47 carried by a bar 48 having lugs 49 pivotally connected to ears 50, projecting from damper members 51 centrally pivoted at 52 to the opposite sides of the casing member 4 or to strips 53 secured to the opposite sides of said casing member. This construction provides a multiple damper, the members 51 of which are individually pivotally supported, but are coupled to the bar 48, which in turn is operated by the lever 40 through the pin and slot connection 46—47. Having thus described my invention in its details, the following mode of operation will be readily understood.

Figure 2 shows the multiple damper closed, the lever 40 under control of the spring 45 and air exhausted from the chamber of cup member 26. Hence, the elastic sealing member 36 has automatically expanded, thus drawing down the plunger 38 and permitting the spring 45 and lever connection to control the multiple damper. The reverse position of all the parts just described is shown in Figure 3, it being understood that air, under pressure, is now in the chamber of cup 26. Starting with the apparatus in the position shown in Figure 2, viz, the multiple damper closed, and ingress of air to the unit ventilator cut off, and it being desired to admit fresh air to the blower chamber 15 of the unit ventilator, the controlling member 34 is manipulated so that its valve shall be in the position shown in Figure 1, thus admitting air from the source of supply to the chamber 32 and to the chamber of cup 26. The sealing member 36 will then be compressed, the vent 31 operating to relieve internal pressure in the sealing member as the air in the chamber of cup 26 compresses the sealing member 36, elevates the plunger 38, and lifts the rear end of the lever 40 on its fulcrum 42 against the tension of spring 45. The front end of the lever 40 will be lowered causing the bar 48 to be moved downwardly, thus operating upon each of the damper members 51 to open the damper to the po-

sition shown in Figure 3 for the free admission of air to the unit ventilator. When it is desired to close the multiple damper, the valve in the controller 34 is turned so as to exhaust air from the cup 36 through the vent 35, this being by turning the valve clockwise 90°. By exhausting the air from the chamber of member 26, the spring 45 is permitted to take control, which, in addition to the normal elastic or expansive capacity of the sealing member 36, will lower the plunger 38 and raise the bar 48 to close the multiple damper members.

Having thus described my invention, what I claim and desire to secure by Letters Patent is:

1. In combination with a heating and ventilating unit having a blower chamber, and a port for admitting fresh air to the blower chamber; a damper for closing the said port; means for shifting the damper to and holding it in one position, including a lever of the first order, a plunger pivoted to the lever, and a spring pulling upon the end of the lever adjacent the plunger; and fluid controlled means, for shifting the damper to and holding it in another position, acting upon said plunger.

2. In the combination substantially as set forth in claim 1, the fluid means including a chamber; a source of compressed fluid supply thereto; and a resilient sealing member between the plunger and the chamber.

3. In the combination substantially as set forth in claim 1, the fluid means including an air chamber; a source of fluid supply thereto; and a corrugated resilient sealing member between the chamber and plunger.

4. In combination with a damper adapted for admitting fresh air to a ventilating unit, and means for actuating the damper including a lever of the first order; a fluid chamber; a plunger within said chamber pivotally connected to said lever; a source of fluid supply to the chamber; a resilient device for controlling the action of the plunger; means for sealing the resilient device to the plunger; and a spring normally tending to control the position of the lever and the position of the plunger.

5. In combination with a multiplex damper adapted for admitting fresh air to a ventilating unit; a bar connecting the elements of the damper for simultaneous operation; a lever of the first order pivotally connected at one end to the bar; a spring drawing upon the lever at the other end; a plunger pivotally connected to the lever adjacent the spring connected end; an air chamber in which the plunger operates; a corrugated resilient member providing a chamber mounted within the air chamber, means for sealing the resilient device to the plunger and the chamber of the device from the air chamber; a source of fluid supply to the chamber; and a vent communicating with the chamber of the said resilient device.

6. In combination with a damper for admitting fresh air to a ventilating unit, means for actuating the damper including an air chamber; a compressible member sealed in said chamber; a plunger connected to the member to be actuated thereby; a lever pivoted between its ends to the plunger and pivotally connected at one end to the damper, and having a spring connected to its opposite end whereby to normally control the position of the lever, the damper and the plunger.

7. In combination with a damper adapted for admitting fresh air to a ventilating unit, means for actuating the damper including an air chamber; means for supporting the air chamber; a resilient member sealed in said chamber; a plunger connected to the resilient member to be actuated thereby; a lever pivoted between its ends to the support and to the plunger and pivotally connected at one end to the damper; and a spring connected to the opposite end of the lever for controlling the normal position of the lever, the damper and the plunger.

MICHAEL J. CALLAHAN.