Jan. 5, 1926. 1,568,063

A. A. FAGEN

BABY HOLDER

Filed Oct. 7, 1922 2 Sheets-Sheet 1

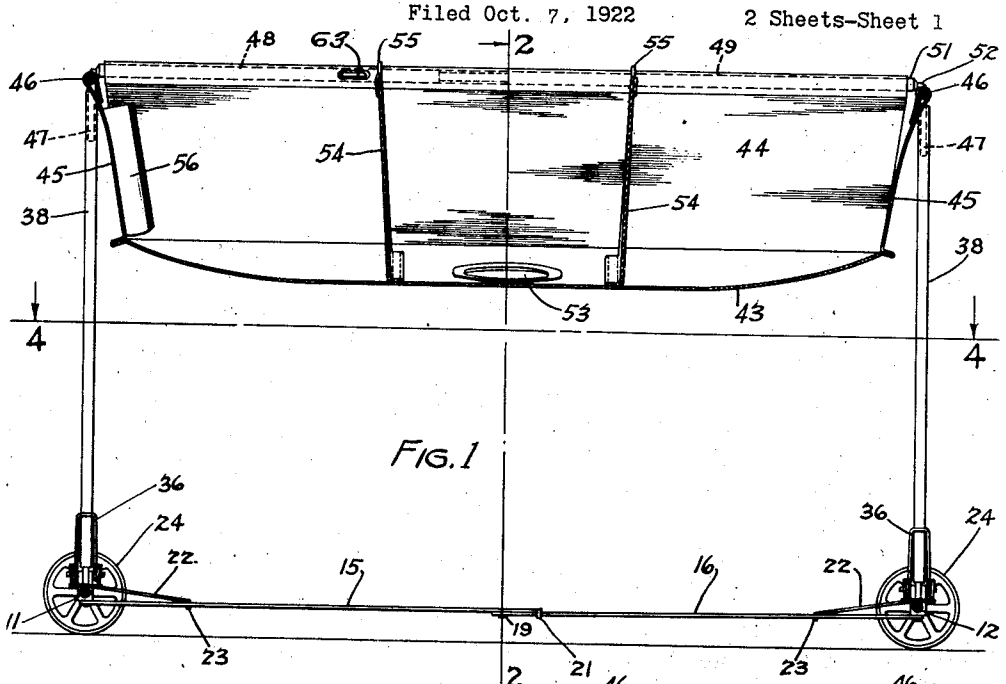

FIG. 1

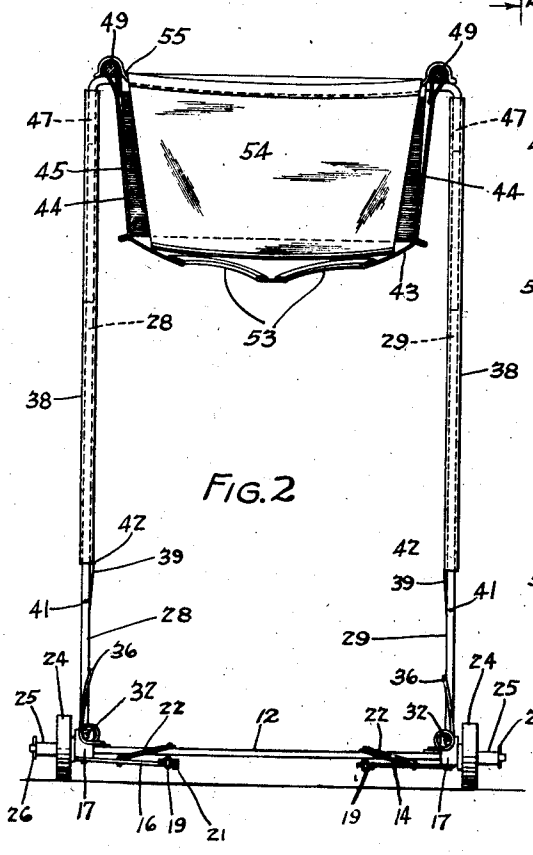

FIG. 2

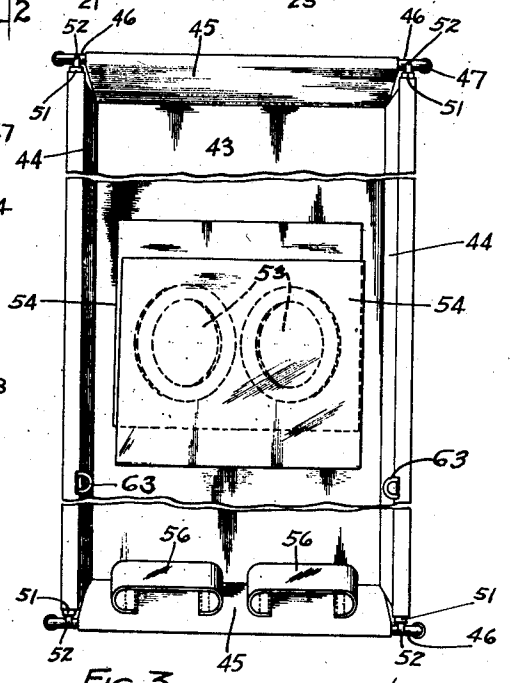

FIG. 3

Inventor
ABRAHAM A. FAGEN

By Paul, Paul & Moore

ATTORNEYS

Jan. 5, 1926. 1,568,063

A. A. FAGEN

BABY HOLDER

Filed Oct. 7, 1922 2 Sheets-Sheet 2

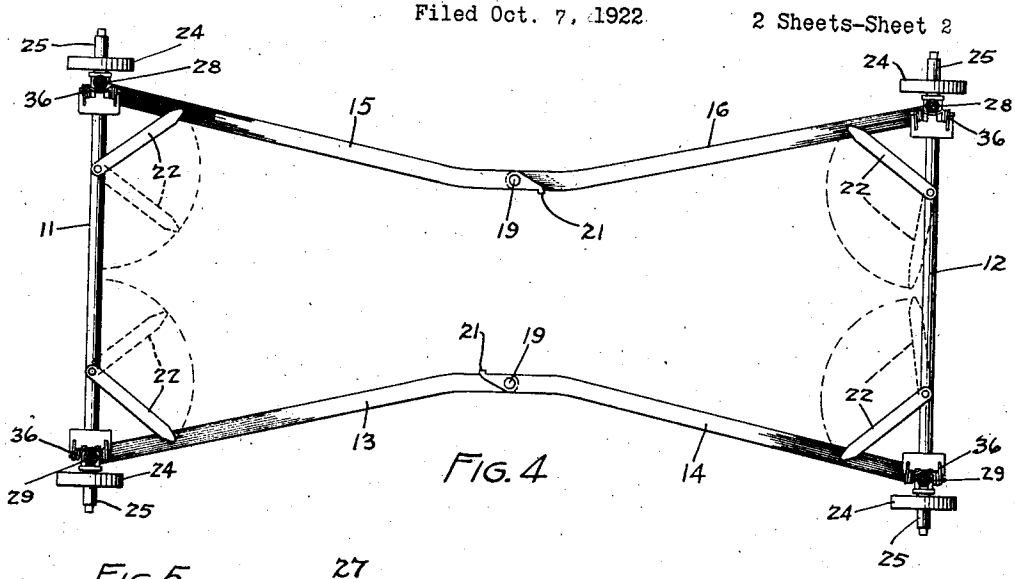

FIG. 4

FIG. 5

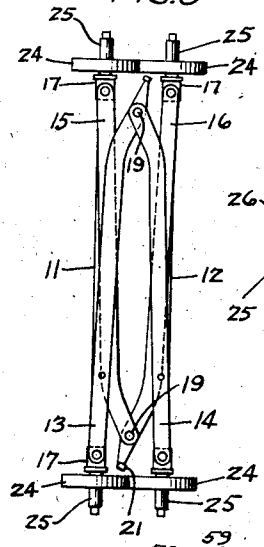

FIG. 6

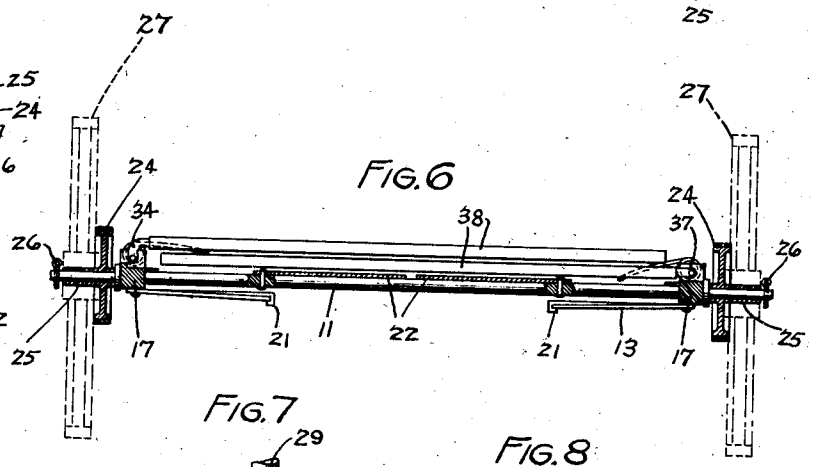

FIG. 7

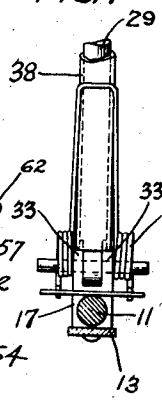

FIG. 8

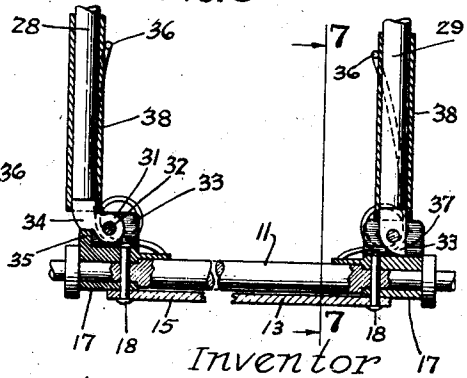

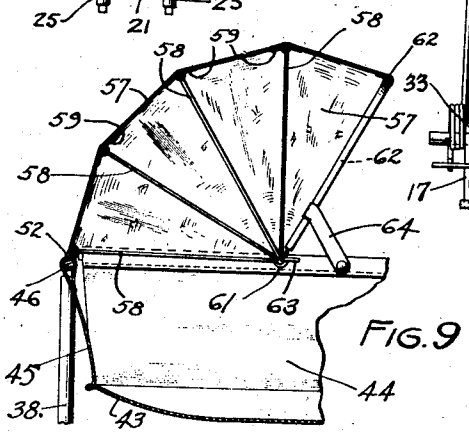

FIG. 9

Inventor
ABRAHAM A. FAGEN

By Paul, Paul & Moore

ATTORNEYS

Patented Jan. 5, 1926. 1,568,063

UNITED STATES PATENT OFFICE.

ABRAHAM A. FAGEN, OF MINNEAPOLIS, MINNESOTA.

BABY HOLDER.

Application filed October 7, 1922. Serial No. 593,100.

To all whom it may concern:

Be it known that I, ABRAHAM A. FAGEN, a citizen of the United States, resident of Minneapolis, county of Hennepin, and State of Minnesota, have invented certain new and useful Improvements in Baby Holders, of which the following is a specification.

This invention relates to new and useful improvements in baby holders and more particularly relates to such devices wherein the holder may be collapsed or folded to occupy a relatively small area. A special use of such a device arises in that it is convenient to pack or carry when traveling as it forms a small compact mass when collapsed and the parts of this device may be formed of materials which are light in weight and the structure is such that it is substantial and strong when in operative position. For example, the device when folded is small enough to be carried in the usual form of shopping bag.

This novel device broadly comprises a base portion, an upright portion and the support for the baby. The base portion is not only collapsible into a compact form but the uprights may likewise be collapsed into close proximity to the folded base while the support is preferably of a flexible material which may enfold the collapsed parts when demounted from its operative position. The device may have its base provided with wheels so that the device may thus form a baby carriage or movable crib.

The object therefore of this invention is to provide an improved baby holder.

Other objects of the invention will more fully appear from the following description and the accompanying drawings and will be pointed out in the annexed claims.

In the accompanying drawings, there has been disclosed a structure designed to carry out the objects of the invention, but it is to be understood that the invention is not confined to the exact features shown as various changes may be made within the scope of the claims which follow.

In the drawings:

Figure 1 is a view in vertical section through the device when in assembled operative position;

Figure 2 is a vertical section on the line 2—2 of Figure 1;

Figure 3 is a plan view of the baby support in assembled position;

Figure 4 is a cross-sectional view of the device on the line 4—4 of Figure 1;

Figure 5 is a view in plan of the collapsed or folded base;

Figure 6 is a view partly in section of one of the end members of the base;

Figure 7 is a vertical sectional view on the line 7—7 of Figure 8;

Figure 8 is a detailed view, partly in section of an end member to show the mounting of the uprights thereon; and

Figure 9 is a vertical sectional view of a hood adapted to be demountably attached to the device.

In the selected embodiment of the invention illustrated in the accompanying drawings for purposes of disclosure, there is shown a baby holder comprising broadly a base, uprights and baby support. These parts are all adapted to be extended into operative assembled position and collapsible or foldable into a small compact mass relatively light in weight and in convenient form for transporting whether manually or otherwise.

The base portion preferably comprises end members and side members. The end members are here shown as rods 11 and 12 which extend transversely of the unfolded structure. The side members, which may be detachably secured to the end members at opposite sides thereof to form substantially a rectangular shape, are preferably made in a plurality of sections, the end sections of each side member being pivotally attached to the end members. As here shown, the side members are each formed of only two sections. One side member is formed of the sections 13 and 14 while the opposite side member is formed of the sections 15 and 16. A convenient means for the pivotal mounting of these sections is provided by blocks 17 borne by the end rods adjacent their ends. These blocks are similar and each is apertured to be mounted upon the rods. As is shown in the detail view of Figure 8, a pin or rivet 18 is passed through vertically alined apertures in the block and rod. While this connection may be demountable if desired, it seems advantageous to provide a relatively permanent attachment by upsetting the rivet ends. Furthermore, each section of these two-part side members is preferably of such length that each is substantially less in length than the length of

the end rods 11 so that these side sections may be swung or folded into alinement with their attached end rods and not project therebeyond.

These side sections are also adapted to be connected together, particularly when in extended operative position. While such connection may be demountable, it is preferred to employ a relatively permanent connection which is pivotal in nature. A headed pin or rivet 19 is carried by each of the side sections 14 and 16 and each shank thereof extends through alined apertures in the terminal portions of the joined sections 13 and 14 and sections 15 and 16. The opposite shank-end is thereafter upset. Thus, the side members may assume the outwardly extended base-forming position shown in Figure 4 or may be swung to the folded compact position shown in Figure 5. In order to aid in maintaining the side sections in a definite base-forming position, each section 14 and 15 is formed with an offset depending detent 21 which is preferably integral. These detents function to limit the outward pivotal movement of the base members to the position assumed by the parts in Figure 4.

Means are employed to reinforce the base when in formed operative position. Such means is shown as also adapted to lock the base in formed position and as pivotally carried by the end members so that they may be swung into alinement with the end members when in inoperative position upon folding of the base. Such a means is conveniently provided by the latches 22 pivotally mounted upon the rods 11 and 12. There are two such latches upon each rod and these latches are each formed with a terminal depending tip 23 for locked seating in apertures in the adjacent side sections. These latches are shown in locked reinforcing position in Figures 1 and 4 and are also shown in intermediate pivotal position by the dotted lines in Figure 4.

The base may rest upon a floor or other such support or may be provided with wheels. When wheels are employed, provision is made for the use of relatively small wheels for house use or larger wheels for outside use when the device is used as a baby carriage. The small wheels 24 are shown as having elongated hubs 25 and rotatably mounted upon the reduced end portions of the rods 11 and held thereon by means of cotter pins 26. The larger wheels 27, for outdoor use, may be slipped on the hubs 25 as is shown in dotted lines in Figure 6 simply by taking off the cotter pins 26.

The means for supporting a baby is adapted to be carried by uprights attached to the base. While these uprights may be demountably attached to the base, it is preferred to provide them with pivotal mountings so that they may assume a collapsed or folded inoperative position in proximity to the compactly folded base. Furthermore, the uprights are extensible to increase their effective heights. These uprights are substantially similar except for their mountings upon the end rods. The uprights include rods 28 and 29. Practically the only difference is in their mounting, the similar rods 28 upon opposite end members being mounted so as to overlie the respectively adjacent rods 29 when in collapsed position. As is shown in the detail view in Figure 8, the rods 28 are provded each with an integral terminally offset ear 31 centrally apertured to receive therethrough a pivot pin 32 borne by the upstanding integral forks 33 of the block 17. Each rod 28 adjacent its offset ear is formed with a heel 34 adapted to rest upon a shoulder 35 integrally provided by the block 17. This heel and shoulder engagement provides a support for the upright when in its operative position. A coiled spring 36 (see Figure 7) functions normally to hold each upright in its vertical working position but yieldably so to permit collapsing or folding.

The terminal structure of the rods 29 is slightly different in that each rod 29 is formed with a terminal toe 37 adapted to rest, when in operative position, upon the upper surface of the block between the forks 33. Furthermore, it may be noted that the pivot pins of the rods 28 are outwardly spaced from the center of the forks 33 while the pins of the rods 29 are substantially on center. Such disposition of the pivotal mountings together with the offsetting of the ears 31 permits the rods 28 to overlay the rods 29 when in collapsed position as is indicated in Figure 6.

Each rod bears thereon a demountable tube 38 in telescopic relation. These tubes may terminally rest upon the forks 33 or may be upwardly extended as is shown in Figure 2. The tubes 38 may be held in elevated position by any suitable form of spring catch. There is here shown the type of catch commonly employed in umbrellas in which a narrow piece 39 of spring metal is carried in a slot when the usual tubular rib structure encloses the slot. The lower offset end 44 is bent and anchored in the rod. The wire may normally lie closely against the outer face of the rod and the tube may be passed thereover but when the tube is manually raised the upper free end of the wire outwardly springs to form a detent 42 whereby the tube is held in raised position as is shown in Figure 2.

The baby support is preferably formed of flexible material such as fabric and comprises a base 43, sides 44 and ends 45. The

upper portion of the support is adapted to be provided with a rectangular demountable frame. This is conveniently effected by hemming the upper edges of the ends and sides as is shown in Figures 1 and 2 so that frame members may be demountably inserted therein. While these frame members may be flexible, they are here shown as substantially rigid bars. The bars 46 are thus inserted in the end edges. The bars are integrally provided with angled ends 47 adapted each to be inserted within the open end of a tube 38. The relatively longer side edges of the support are adapted to receive within their hemmed loops the side bars which are preferably telescopic in order to reduce their lengths when demounted. The side bars comprise the tubes 48 and 49. A head 51 is fixedly secured in the outer end portion of each tube and each head is provided with an integral pin 52 which is adapted to be demountably seated in an aperture provided in the end bars 46 as is shown in Figures 1 and 3. When the fabric support is demounted from its operative position, the bars and tubes are withdrawn and placed adjacent the collapsed base in alinement with the ends 11 and 12. As is shown in Figure 6, the telescopic tubes 38 are preferably of a length to extend only between the wheels when in collapsed telescopic position. The fabric is employed to be placed about the collapsed parts, preferably being pinned in such enfolding position to overcome the tendency of the upright rods to spring to vertical position.

This novel support is also provided with additional improvements. For example, the base 43 may be formed with two reinforced holes 53 through which the baby's legs may project when assuming an upright position. When the baby is in such position it is advantageous to provide partitions which may equally function as back rests. Such partitions are conveniently provided by pieces 54 of fabric preferably of less width than the base 43 and stitched to the base in spaced relation on opposite sides of the holes 53. The upper edges of these pieces 54 may also be hemmed to provide fabric loops through which a rod 55 may be demountably passed. The rod ends are hooked to be attached to the side bars as is shown in Figure 2. When it is desired to place the baby in a reclining position, the rods 55 may be removed from the partitions and the latter may assume the flat overlapping position indicated in Figure 3 wherein these partition pieces are shown as covering the holes in the base. An additional convenient feature resides in the provision of the pockets 56 formed of fabric stitched to one end 45. These pockets may receive, for example, a bottle and talcum powder. While this baby support is shown as particularly adapted for use in connection with this novel baby holder, it is obvious that this body support may be carried or suspended otherwise than by the base and uprights. Another convenient feature of the baby support resides in the provision of a hood 57 preferably of fabric and having stiffening ribs 58 which are shaped like a square-based letter U. The bases of these ribs are held by fabric strips 59 stitched to the hood while the ends are pivotally mounted in the eyelets 61, preferably integral with the forward rib 62. The eyelets 61 are pivotally and demountably connected to the opposed loops 63 provided upon the side bars 48 of the support as shown in Figures 1 and 3. The rear or bottom rib of the hood may be demountably secured to the end bar 46 or to the opposed hooks 52. Suitable straps 64 are secured to the rib 62 on each side thereof, adapted to be connected to the sides 44 of the support by any suitable means, such as the common type of snap button commonly used in gloves, etc., for the purpose of securely holding the hood in the raised position, shown in Figure 9. This hood may therefore be demounted from the support and collapsed by moving the ribs together as is common in such hoods for baby carriages.

I claim as my invention:

1. In a collapsible baby holder, the combination of a base having end and side members, means pivotally to attach said members whereby the base may be collapsed with said members in substantially parallel proximity to occupy a relatively small space or extended into operative position, uprights pivotally attached to said base and adapted to be inoperatively swung into alinement with said members, means to retain said uprights in operative position, and a baby support adapted to be demountably attached to said uprights when in operative position.

2. In a collapsible baby holder, the combination of a base having end and side members, means pivotally to attach said members whereby the base may be collapsed with said members in substantially parallel proximity to occupy a relatively small space or extended into operative position, uprights pivotally attached to said base and adapted to be inoperatively swung into alinement with said members, tension means normally to hold the uprights in operative position, and a baby support adapted to be demountably attached to said uprights when in operative position.

3. In a collapsible baby holder, the combination of a base having end and side members, means pivotally to attach said members whereby the base may be collapsed to occupy a relatively small space or extended

into operative position, uprights pivotally attached to said base and adapted to be inoperatively swung into alinement with said members, means to retain the uprights in operative position, said uprights being formed of telescopic sections whereby the length of the uprights may be extended in operative position or shortened when in alined inoperative position, and a baby support adapted to be demountably attached to said uprights when in operative position.

4. In a collapsible baby holder, the combination of a base having end and side members, wheels terminally borne by the end members, means pivotally to attach the members whereby the side members may be folded in alinement with the end members between said wheels and the end members moved into proximity so that the base is thereby collapsed, uprights carried by the base, a baby support adapted demountably to be attached to the uprights when in operative position, means pivotally to attach the uprights to the base whereby the uprights may be collapsed into inoperative position adjacent the base members.

5. In a collapsible baby holder, the combination of a base having ends and side members, wheels terminally borne by the end members, means pivotally to attach the members whereby the side members may be folded into alinement with the end members between said wheels and the end members moved into proximity so that the base is thereby collapsed, uprights carried by the base, a baby support adapted demountably to be attached to the uprights when in operative position, means pivotally to attach the uprights to the base whereby the uprights may be collapsed into inoperative alinement with the end members, the uprights being formed of telescopic sections whereby the length of the uprights may be extended in operative position or shortened to rest in inoperative alined position.

In witness whereof, I have hereunto set my hand this 30th day of September, 1922.

ABRAHAM A. FAGEN.