Aug. 22, 1950 H. M. REM 2,519,502

MULTICOLOR PENCIL

Filed June 9, 1948

Fig. 1.

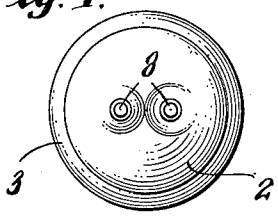

Fig. 2.

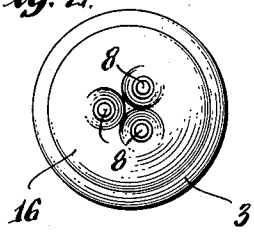

Fig. 3.

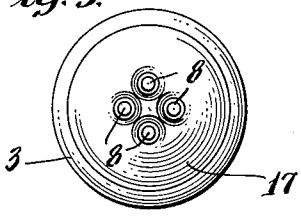

Fig. 4.

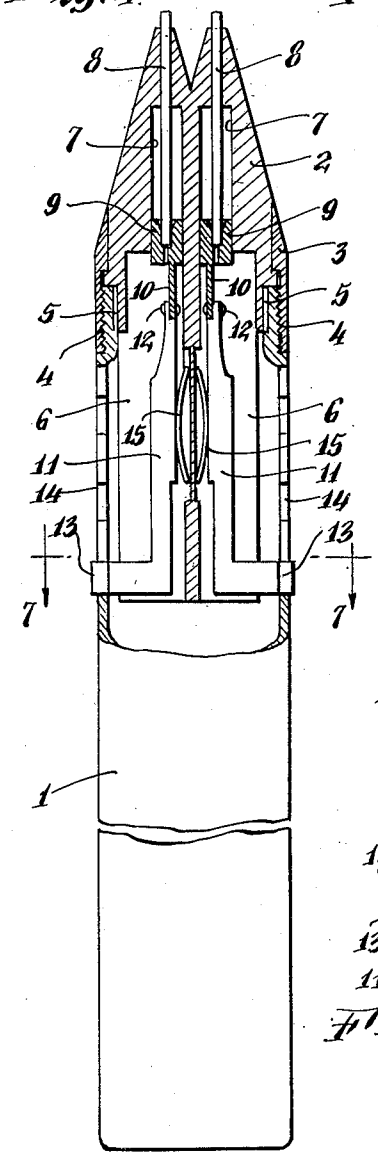

Fig. 5.

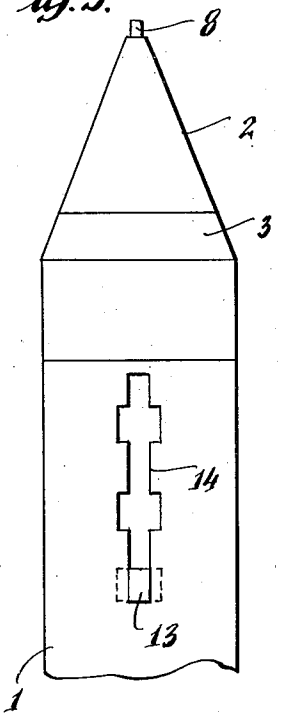

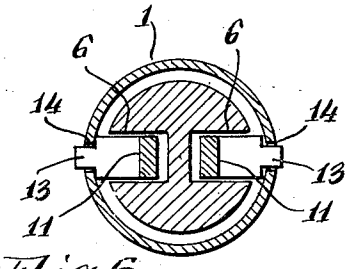

Fig. 6.

INVENTOR.
Henry M. Rem
BY Henry J. E. Metzler
Agt.

Patented Aug. 22, 1950 2,519,502

UNITED STATES PATENT OFFICE

2,519,502

MULTICOLOR PENCIL

Henry M. Rem, New York, N. Y.

Application June 9, 1948, Serial No. 31,940

2 Claims. (Cl. 120—14.5)

1

The present invention relates to improvements in poly-pointed or multi-color pens and pencils, and the main object of the present invention is the provision of a device of the character described which has at its tip two or more pointed extremities or writing nibs, each of which is provided with a writing medium, such as a lead or an ink of different color.

With the foregoing and other objects in view which will appear as the description proceeds, the invention consists of certain novel details of construction and combinations of parts hereinafter more fully described and pointed out in the claims, it being understood that changes may be made in the construction and arrangement of parts without departing from the spirit of the invention as claimed.

In the accompanying drawings the preferred forms of the invention have been shown.

In said drawings:

Figure 1 is a top plan view of a two-color writing utensil made in accordance with my invention;

Fig. 2 is a top plan view of a three-color writing utensil made in accordance with my invention;

Fig. 3 is a top plan view of a four-color writing utensil made in accordance with my invention;

Fig. 4 is a side view fractionally in longitudinal section of a two-color pencil;

Fig. 5 is another fractional side view of the pencil of Fig. 4; and

Fig. 6 is a cross-sectional view on the line 7—7 of Fig. 4.

In the drawing the numeral 1 denotes a tubular barrel which has an externally threaded, reduced open upper end portion 4 whose inner side is provided with straight grooves 5. As per the pencil modification, Figs. 1, 4, 5 and 6, a tip 2, having at its cylindrical portion straight ribs which engage the grooves 5 and having an annular rib above its straight ribs, is secured to the open end of the barrel 1 by means of a partially internally threaded sleeve member 3, which is screwed upon the threaded end portion 4 of the barrel 1 and which engages said annular rib at the tip 2. A core portion of the tip 2, which is provided with longitudinal channels 6, extends into the barrel 1, and a plurality of writing nibs or pointed upper end portions are provided at the tip 2. In the instance shown in Figs. 1, 4, 5 and 6, the tip 2 is provided with two nibs or pointed upper end portions. From each of the nibs or pointed upper end portions extends through the tip 2 a bore 7 whose upper end portion is of a

2

reduced diameter and has a lead 8 slidable therein. A socket 9, which holds a lead 8, is slidable in the wider main portion of each bore 7, and a thin, preferably flexible tongue 10 is downwardly extended from each socket 9. A vertical portion of an L-shaped member is secured to each tongue 10 by means of a rivet 12 or the like, and the horizontal portion of the member 11 has a reduced lateral extremity 13. The upright wall of the barrel 1 is provided with a longitudinal, notched slot 14 for each angular member 11, and the width of the latter's end portion 13 is so dimensioned that it can be extended through the narrow portions of the slot 14, while the remainder of the member 11 is of such a width that it can be extended only through the wide, notched portions of the slot 14. Springs 15 are interposed between the center section of the core of the tip 2 and the vertical portion of the members 11. The springs 15 have a tendency to force the members 11 toward the wall of the barrel 1.

If one of the leads 8 is partially used up, the portion 13 is depressed toward the center of the barrel 1 and the member 11 is pushed toward the tip 2 until the portion 13 registers with the next higher widened or notched portion of the slot 14. Thereupon the portion 13 is released, so that the horizontal portion of the member 11 rests upon said next higher notched portion of the slot 14. In order to replace one lead 8 by another, the parts 11 and 9 are pushed into the bore 7 as far as possible, the old lead is pulled out of the socket 9, and a new lead is inserted thereinto. Then the parts 8 to 11 are pushed back to the position shown in Fig. 4. The leads 8 are of different colors and/or grades.

In the case of a three-color pencil (Fig. 2) a tip 16 with three bores, nibs, leads 8, sockets 9 and members 11 is used on a barrel which has three slots 14; and in the case of a four-color pencil (Fig. 3) a tip 17 with four bores, nibs, leads 8, sockets 9 and members 11 is used on a barrel which has four slots 14.

Since certain changes may be made in the above article and different embodiments of the invention could be made without departing from the scope thereof, it is intended that all matter contained in the above description or shown in the accompanying drawing shall be interpreted as illustrative and not in a limiting sense.

Having thus fully described my said invention, what I claim as new and desire to secure by Letters Patent is:

1. A device of the character described comprising a substantially conical tip provided with a

plurality of pointed end portions through each of which there is extended an axial bore that has a wider lower main portion, a barrel having notched longitudinal slots in its upright wall being secured to said tip, a socket adapted for holding a writing lead being slidable in the wider portion of each bore, an L-shaped member being connected to each socket and extended into said barrel, and resilient means being provided at a core portion extending into said barrel from said tip and being adapted for forcing each foot portion of the L-shaped members into engagement with the notches of one of the slots in said barrel.

2. A multi-color pencil comprising a barrel having a plurality of longitudinal slots in its side wall, a tip secured to one end of said barrel and having a plurality of pointed end portions through each of which an axial bore is extended, a socket being slidable in each of said bores and

adapted for holding a writing lead which extends through a pointed end portion of said tip, a plurality of L-shaped members extending into said barrel and each of the L-shaped members having its upper end secured to one of said sockets while its foot portion extends radially through one of the serrated slots in said barrel.

HENRY M. REM.

REFERENCES CITED

The following references are of record in the file of this patent:

UNITED STATES PATENTS

Number	Name	Date
878,771	Cushing	Feb. 11, 1908
946,036	Hallock	Jan. 11, 1910
1,087,404	Seipel	Feb. 17, 1914
1,938,835	Grzyb	Dec. 12, 1933