F. FINCKH.

DUMPING RECEPTACLE.

APPLICATION FILED JULY 18, 1921.

1,419,666. Patented June 13, 1922.

Fig. 1.

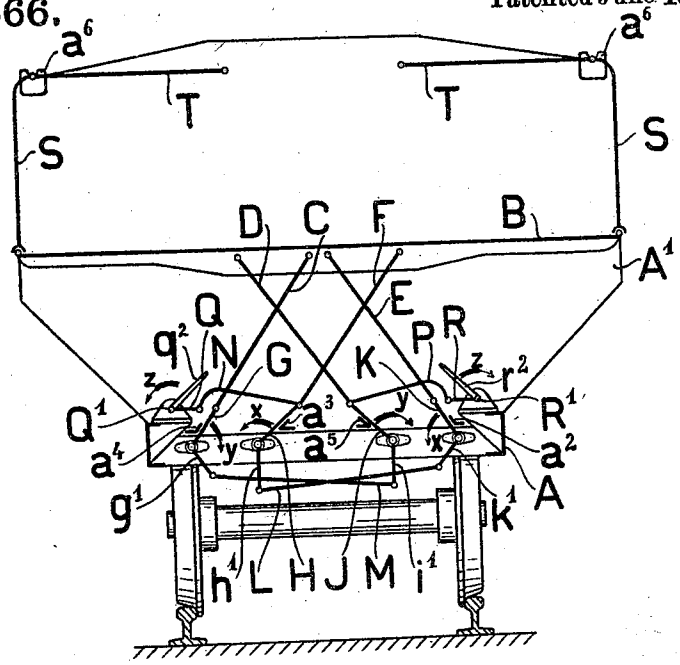

Fig. 2.

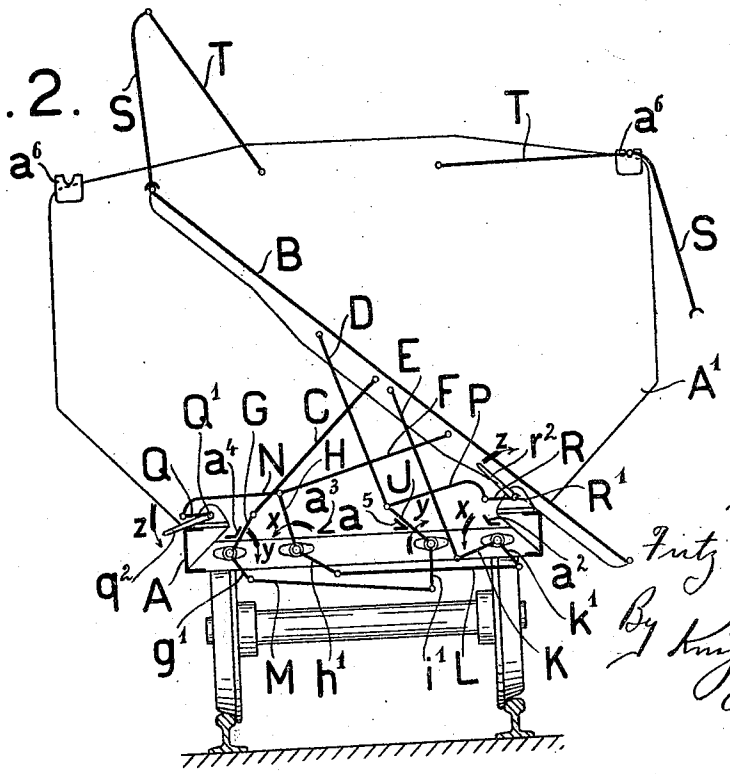

Inventor
Fritz Finckh,
By Knight Bros.
Attys.

UNITED STATES PATENT OFFICE.

FRITZ FINCKH, OF ESSEN, GERMANY, ASSIGNOR TO FRIED. KRUPP AKTIENGESELLSCHAFT, OF ESSEN-ON-THE-RUHR, GERMANY.

DUMPING RECEPTACLE.

1,419,666. Specification of Letters Patent. **Patented June 13, 1922.**

Application filed July 18, 1921. Serial No. 485,555.

To all whom it may concern:

Be it known that I, FRITZ FINCKH, residing at Essen, Germany, a citizen of the German Republic, have invented a certain new and useful Improvement in Dumping Receptacles, of which the following is a specification.

This invention relates to a dumping receptacle having its floor tiltable to either side to dump its contents and in which the axis about which the tilting movement takes place lies on the opposite side of the central longitudinal plane of the receptacle, from that on which the dumping takes place; more particularly stated, the invention consists in a dumping receptacle of the kind described, the floor of which is guided by crossed links in its tilting movement to either side.

An embodiment of the invention in a railway dumping car is represented in the drawing in which,

Fig. 1 is a diagrammatic cross-section through a car in its normal position, and

Fig. 2 is a corresponding view of the car in one of the dumping positions.

To the underframe A of the car are rigidly secured the two end walls A^1 parallel to each other. The dumping floor B is carried at a plurality of points longitudinally of the car by two pairs of crossed links C, D and E, F, pivotally connected to the underframe A on both sides of the central longitudinal plane, by means of supporting members consisting of crank-arms G, H, J and K. These crank-arms are themselves pivoted to the underframe on both sides of said central plane, the link C, which belongs to the left pair of links, being carried by the crank-arm G, the link D, which belongs to the same pair, being carried by the crank-arm J, the link E, which belongs to the right hand pair of links, by the crank-arm K, and the link F, belonging to the same pair by the crank-arm H. Thus the crank-arms, G and J or K and H, belonging to the same link pair C, D, or E, F, lie on different sides of the central longitudinal plane of the car. Both the crank arms K and H belonging to the right hand pair of links E, F, and which turn in the direction of the arrow x (Fig. 2) in dumping, and the crank-arms G and J, belonging to the left-hand pair of links C, D, and which turn in the opposite direction, indicated by the arrow y, in dumping, bear when the car is in the loading position, against stops a^2, a^3, a^4 or a^5, respectively, provided on the underframe, in which position these crank arms are turned a certain amount beyond their upper dead center position in directions opposite to the arrows x and y. To each crank-arm K, H and G, J is rigidly secured a crank-arm k^1, h^1, g^1 or i^1, respectively, downwardly directed in the loading position of the car. The crank-arms k^1 and h^1 are connected together by a rod L, and the crank-arms g^1 and i^1 by a rod M, so that two crank-quadrilaterals k^1 L h^1 and g^1 M i^1 are formed.

The inner crank-arms H and J are connected respectively by thrust-rods N and P with operating crank-arms Q and R. These are fast on longitudinal shafts Q^1 and R^1 journalled on the underframe A and lying on the same side of the central longitudinal plane as the corresponding crank-arms H and J. The crank-arms Q and R, which turn in the direction of the arrows z in dumping, assume when the car is in the loading position, an angular position in which they surpass their inner dead center position by a slight amount, in the opposite directions to the arrows z. The shafts Q^1 and R^1 can be turned by hand levers q^2 and r^2, which are connected therewith by a clutch mechanism automatically disengaged in the dumping movement in a well-known way.

Each of the two side walls S of the car is in the loading position of the car, at its lower edge in gravity closed pivotal connection with the floor B in the usual way which connection is automatically released on the discharge side during the dumping movement of the floor, while on the other side it is maintained (Fig. 2). At their upper end the side walls rest in the loading position of the car, in open bearings a^6 on the end walls A^1. The side walls are guided by links T pivoted on the end walls A^1.

When the car is loaded, the weight of the load is transmitted by the link pairs C, D and E, F, onto the crank-arms G, J and K, H, resting on the stops a^4, a^5, a^2 and a^3, and is taken up by these arms. As said arms lie beyond a dead center position, a self-locking action is thus produced.

Since the crank-arms seek to turn in the opposite directions to the arrows y and x under the weight of the load, but are prevented from turning in said self-locking action, by the stops a^4, a^5 and a^2, a^3, the car is protected against any unintentional discharging in a high degree. In case the crank-arms G, J and K, H are jolted out of their self-locking position by the motion of the travelling car and should encounter, at the same time, forces tending to turn them in the direction of the arrows y and x, a further safeguard is provided by the fact that the operating crank-arms of the thrust mechanisms P, R and Q, N are also in the range of a dead center position and consequently prevent the crank-arms G, J and K, H from turning in the direction of the arrows y and x.

If the car is to be dumped to the right (Fig. 2), the left-hand shaft Q^1 is turned in the direction of the arrow z by the hand-lever q^2. This movement is transmitted to the corresponding crank-arm H by each of the thrust-crank connections Q, N, attached to the shaft Q^1, and from H to the crank-arm K by the crank quadrilateral h^1, L, k^1, so that the crank-arm K is turned in the direction of the arrow x. To assist in an understanding of the dumping movement of the floor B, assume first that one of the links, i. e., the link F, of the pair of links E, F, is removed. The floor then tips, as soon as the crank-arm K is turned past the dead center position in the direction of the arrow x, towards the right under the effect of the weight of the load, the floor being so guided by the link pair C, D, lying on the left side of the central longitudinal plane, the supporting crank-arms G and J of which remain stationary, that it turns around a momentary axis lying on the left side of the central plane. If the crank-quadrilateral h^1, L, k^1, were of any customary construction the distance of the pivots, which serve to connect the link F (at first assumed to be omitted) with the floor B and the crank-arm H, would vary during the dumping movement of the floor, so that, with the link F inserted, a movement would only be possible if one of the two pivots were a sliding pivot. But by constructing the crank-quadrilateral h^1, L, k^1 in a suitable manner, it can be obtained that the distance of the pivots during the dumping movement remains practically the same. When this condition is fulfilled, which should be assumed both for the crank-quadrilateral h^1, L, k^1 and—with relation to the link D—for the crank quadrilateral i^1, M, q^1, the tilting movement of the floor is possible even when the link F is present, as is actually the case, without the necessity of providing a sliding pivot connection as, for example, by the provision of a slot.

In the tilting movement of the floor, the automatic release of the pivotal connection between the floor B and side wall S takes place in a well known way at the discharging side, while on the other side this connection remains in engagement and the side wall is raised (Fig. 2).

To return the floor B into the loading position, the hand lever q^2 is turned back in the opposite direction to the arrow z to its original position, whereby the floor is raised by the connections Q, N, H, h^1, L, k^1, K actuated by the shaft Q^1 and by the links E, F connected thereto.

The dumping to the left needs no further explanation, since the operations correspond exactly to those of the dumping to the right. It may be stated, merely, that, in contradistinction to the first case, the mechanism r^2, R^1, R, P, J, i^1, M, q^1, G on the right, is actuated and the mechanism q^2, Q^1, Q, N, H, h^1, L, k^1, K remains locked.

I claim—

1. A dumping receptacle of the class described comprising a tiltable floor, pairs of crossed links supporting said floor, said pairs of links being disposed on opposite sides of the central longitudinal plane of the receptacle and supporting members pivoted to the frame of the receptacle and each connected to one of the links of the pairs of crossed links.

2. A dumping receptacle of the class described comprising a tiltable floor, pairs of crossed links supporting said floor, said pairs of links being disposed on opposite sides of the central longitudinal plane of the receptacle and supporting members pivoted to the frame of the receptacle and each connected to one of the links of the pairs of crossed links, the supporting members of one pair of links being capable of being locked with respect to the frame of the receptacle independently of the supporting members of the other pair of links.

3. A dumping receptacle of the class described comprising a tiltable floor, pairs of crossed links supporting said floor, said pairs of links being so connected to said floor that the pivotal axis thereof during the dumping movement lies on the opposite side of the central longitudinal plane of the receptacle from that to which dumping takes place, supporting members pivotally mounted on the frame of the receptacle, each of said supporting members being connected to one of the links of said pairs of crossed links and so disposed as to be beyond the dead center position with respect to the links connected therewith, stops secured to the frame of the receptacle whereby the weight of the load carried by said floor and transmitted through said crossed links will force said supporting members against said stops.

4. A dumping receptacle of the class described comprising a tiltable floor, pairs

of crossed links secured to said floor and supporting the same, said pairs of links being disposed on either side of the central longitudinal plane of the receptacle, supporting members pivoted to the frame of the receptacle and connected to said links, means connecting the supporting members which are connected to a pair of links so that they turn in the same direction during the dumping movement, and thrust mechanisms, each thrust mechanism engaging one of the supporting members which is furthest away from the dumping side, said thrust mechanism being beyond the dead center position in the loading position of the floor.

5. A dumping receptacle of the class described comprising a tiltable floor, pairs of crossed links secured to said floor and supporting the same, said pairs of links being disposed on either side of the central longitudinal plane of the receptacle, supporting members pivoted to the frame of the receptacle and each connected to one of the links of the pairs of crossed links, the supporting members of one pair of links being capable of being locked with respect to the frame of the receptacle independently of the supporting members of the other pair of links, means connecting the supporting members which are connected to a pair of links so that they turn in the same direction during the dumping movement, and thrust mechanism, each thrust mechanism engaging one of the supporting members which is furthest away from the dumping side, said thrust mechanism being beyond the dead center position in the loading position of the floor.

6. A dumping receptacle of the class described comprising a tiltable floor, pairs of crossed links supporting said floor, crank-arms pivotally mounted on the frame of the receptacle and each connected to one of the links of the pairs of links, means permanently connecting the crank-arms which are connected to a pair of links, thrust rods connected to the crank-arms furthest away from the dumping side, arms pivotally connecting said thrust rods to the frame of the receptacle, operating handles connected thereto for moving said thrust rods, whereby a pair of said links and their connected crank-arms may be operated to tilt said floor.

7. A dumping receptacle of the class described comprising a floor, tiltable to each side, the axis during the dumping movement lying on the opposite side of the central longitudinal plane of the receptacle, pairs of crossed links having their upper ends connected to said tiltable floor, crank-arms pivoted to the frame of the receptacle, each crank-arm being connected to one of said links, rods connecting the crank-arms which are connected to a pair of links, so that said crank-arms move in unison and in the same direction during the dumping operation, an operating lever pivotally mounted to the frame at each side of the receptacle, thrust rods connected to one of the links of each pair of crossed links and a crank-arm connecting each thrust bar to its respective operating lever whereby a pair of crossed links and their corresponding crank-arms may be operated to tilt said floor.

The foregoing specification signed at Essen, Germany, this 16th day of June, 1921.

FRITZ FINCKH.